Chapter 296-155 WAC
Safety Standards for Construction Work
(Form Number F414-033-000)

LAST UPDATED: 05/20/2016

This book contains rules for Safety Standards for construction work, as adopted under the Washington Industrial Safety and Health Act of 1973 (Chapter 49.17 RCW).

DATE: The new issue date of this book is May 2016. A brief promulgation history, set within brackets at the end of each section, gives statutory authority, administrative order of promulgation, and date of adoption of filing.

TO RECEIVE E-MAIL UPDATES:

- Sign up for our Listserv at www.Lni.wa.gov/main/Listservs/SafetyStandards.asp

TO PRINT YOUR OWN PAPER COPY OR TO VIEW THE RULE ONLINE:

- Go to http://www.lni.wa.gov/Safety/Rules/Find/

TO REQUEST A HARDCOPY:

- E-mail your mailing address and book request to: RulesRequests@Lni.wa.gov

DOSH CONTACT INFORMATION:

- Physical address: 7273 Linderson Way, Tumwater, WA 98501-541, located off I-5 Exit 101 south of Tumwater.
- Mailing address: DOSH Standards and Information , PO Box 44620, Olympia, WA 98504-4620
- Information telephone number is 1-800-423-7233

All L&I safety standards are also available on our Internet site at http://www.lni.wa.gov/safety/.

Also available on the DOSH web site:

• DOSH Core Rules	• DOSH Regional Directives (DRD's)
• Other General DOSH Rules	• DOSH Interim Operations and Interpretive Memoranda (DIOIM)
• Industry and Task-specific Rules	• Memoranda of Understanding (MOU)
• Newly adopted rules and new rule Information	

Table of Contents

Part A	General Safety and Health Provisions. WAC 296-155-001 through 296-155-040
Part B-1	Occupational Health and Environmental Control. WAC 296-155-100 through 296-155-17654
Part B-2	Hazard Communication. WAC 296-155-180
Part C	Personal Protective and Life Saving Equipment. WAC 296-155-200 through 296-155-240
Part C-1	Fall Protection Requirements for Construction. WAC 296-155-24601 through 296-155-24624
Part D	Fire Protection and Prevention. WAC 296-155-250 through 296-155-280
Part E	Signaling and Flaggers. WAC 296-155-305 through 296-155-315
Part F	Storage, Use and Disposal. WAC 296-155-325 through 296-155-335
Part F-1	Rigging Requirements for Material Handling. WAC 296-155-336 through 296-155-34025
Part G	Tools-Hand and Power. WAC 296-155-350 through 296-155-380
Part H	Welding and Cutting. WAC 296-155-400 through 296-155-420
Part I	Electrical. WAC 296-155-426 through 296-155-462
Part J	Stairways. WAC 296-155-475 through 296-155-477
Part L	Cranes, Rigging, and Personnel Lifting. WAC 296-155-529 through 296-155-56435
Part M	Motor Vehicles, Mechanized Equipment, and Marine Operations. WAC 296-155-600 through 296-155-630
Part N	Excavation, Trenching, and Shoring. WAC 296-155-650 through 296-155-66411
Part O	Concrete, Concrete Forms, Shoring, and Masonry Construction. WAC 296-155-675 through 296-155-699
Part P	Steel Erection. WAC 296-155-701 through 296-155-72406
Part Q	Underground Construction. WAC 296-155-725 through 296-155-74501
Part R	Miscellaneous Construction Requirements. WAC 296-155-755 through 296-155-77135
Part S	Demolition. 296-155-775 through 296-155-830
Part T	Possession, Handling, and Use of Explosives. Refer to Chapter 296-52, Explosives.
Part U	Power Distribution and Transmission Lines. Refer to Chapter 296-45, Safety standards for electrical workers.
Part V	Rollover Protective Structures and Overhead Protection. WAC 296-155-950 through 296-155-965

PART A
GENERAL SAFETY AND HEALTH PROVISIONS

LAST UPDATED: 05/20/2016

WAC 296-155-001 Foreword. 1

WAC 296-155-003 Subsections, subdivisions, items, subitems, and segments. 1

WAC 296-155-005 Purpose and scope. 2

WAC 296-155-006 Equipment approval by nonstate agency or organization. 2

WAC 296-155-007 Incorporation of standards of national organization. 2

WAC 296-155-008 Incorporation of standards of federal agency. 3

WAC 296-155-009 Equipment whether or not owned by, or under control of the employer. 3

WAC 296-155-010 Variance and procedure. 3

WAC 296-155-012 Definitions applicable to all sections of this chapter. 4

WAC 296-155-015 Education and first-aid standards. 7

WAC 296-155-020 Housekeeping. 7

WAC 296-155-030 Acceptable certifications. 8

WAC 296-155-035 General requirements. 9

WAC 296-155-040 Safe place standards. 9

WAC 296-155-001 Foreword.

(1) This chapter has been compiled with the purpose of consolidating safety and health construction safety standards into one chapter of the Washington Administrative Code, by the promulgation of the standards contained herein. It is also the intent that the safety standards of the Washington state department of labor and industries, will be at least as effective as those adopted by the U.S. Department of Labor and administered by the Occupational Safety and Health Administration as published in the Code of Federal Regulations. The department of labor and industries is incorporating many of the preexisting construction safety standards and adding new standards under this chapter.

(2) Attention is called to the fact that certain Washington state standards contain standards and/or regulations applicable to all industries. These include, but are not limited to: The code for boilers and pressure vessels; the code for pressure piping; the general industrial safety and health standards; the general occupational health standards; regulations of the department of social and health services..

[Statutory Authority: Chapter 49.17 RCW. 94-15-096 (Order 94-07), § 296-155-001, filed 7/20/94, effective 9/20/94; Order 76-29, § 296-155-001, filed 9/30/76; Order 74-26, 296-155-001, filed 5/7/74, effective 6/6/74.]

WAC 296-155-003 Subsections, subdivisions, items, subitems, and segments.

(1) That portion of section numeration appearing after the chapter designation appears in either a three digit or a five digit format (e.g. WAC 296-24-330 and 296-24-30002). The final two digits of the section number are implied decimal extensions of the first three digits and represent a further division of the three digit enumeration.

(2) Sections of this chapter may be divided into subsections (1), (2), (3), etc., which may in turn be divided into subdivisions (a), (b), (c), etc., which may be further divided into items (i), (ii), (iii), etc., which may be further divided into subitems (A), (B), (C), etc., which may be further divided into segments (aa) [(I)], (bb) [(II)], (cc) [(III)], etc., all according to the following hierarchy, e.g.

Sections	296-24-330 and 296-24-33002
Subsections	(1) (2)
Subdivisions	(a) (b)
Items	(i) (ii)
Subitems	(A) (B)
Segments	I II

*Note: **"Part"** as used in this standard means a major division of this chapter relating to a specific topic or topics and containing various related sections.*

[Statutory Authority: RCW 49.17.040 and 49.17.050. 86-03-074 (Order 86-14), § 296-155-003, filed 1/21/86; Order 74-26, § 296-155-003, filed 5/7/74, effective 6/6/74.]

WAC 296-155-005 Purpose and scope.

(1) The standards included in this chapter apply throughout the state of Washington, to any and all work places subject to the Washington Industrial Safety and Health Act (chapter 49.17 RCW), where construction, alteration, demolition, related inspection, and/or maintenance and repair work, including painting and decorating, is performed. These standards are minimum safety requirements with which all industries must comply when engaged in the above listed types of work.

(2) If a provision of this chapter conflicts with a provision of the general safety and health standard (chapter 296-24 WAC), the general occupational health standard (chapter 296-62 WAC), or the safety and health core rules (chapter 296-800 WAC), the provision of this chapter will prevail. When a provision of this chapter conflicts with a provision of another vertical safety standard applying to the place of work, the provisions of the vertical standard of specific application will prevail.

[Statutory Authority: RCW 49.17.010, .040, .050, and .060. 16-09-085 (Order 15-08), § 296-155-005, filed 04/19/16, effective 05/20/16. Statutory Authority: RCW 49.17.010, .040, .050. 01-11-038 (Order 99-36), § 296-155-005, filed 05/09/01, effective 09/01/01. Statutory Authority: RCW 49.17.040 and 49.17.050. 86-03-074 (Order 86-14), § 296-155-005, filed 1/21/86. Statutory Authority: RCW 49.17.040, 49.17.050, 49.17.240, chapters 42.30 and 43.22 RCW. 80-17-014 (Order 80-20), § 296-155-005, filed 11/13/80; Order 76-29, § 296-155-005, filed 9/30/76; Order 74-26, § 296-155-005, filed 5/7/74, effective 6/6/74.]

WAC 296-155-006 Equipment approval by nonstate agency or organization.

Whenever a provision of this chapter states that only that equipment or those processes approved by an agency or organization other than the department of labor and industries, such as the Underwriters Laboratories or the Mine Safety and Health Administration (MSHA) and the National Institute for Occupational Safety and Health (NIOSH), must be utilized, that provision must be construed to mean that approval of such equipment or process by the designated agency or group must be prima facie evidence of compliance with the provisions of this chapter.

[Statutory Authority: RCW 49.17.010, .040, .050, and .060. 16-09-085 (Order 15-08), § 296-155-006, filed 04/19/16, effective 05/20/16. Statutory Authority: Chapter 49.17 RCW. 94-15-096 (Order 94-07), filed 07/20/94, effective 09/2094; Order 74-26, § 296-155-006, filed 5/7/74, effective 6/6/74.]

WAC 296-155-007 Incorporation of standards of national organization.

Whenever a provision of this chapter incorporates by reference a national code or portion thereof which has been adopted by and is currently administered by another state agency, compliance with those provisions adopted and administered by such other state agency, if from a more recent edition of such national code, will be deemed to be prima facie evidence of compliance with the provisions of this chapter.

[Order 74-26, § 296-155-007, filed 5/7/74, effective 6/6/74.]

WAC 296-155-008 Incorporation of standards of federal agency.

(1) Whenever a provision of this chapter incorporates therein provisions of the Code of Federal Regulations (CFR) and changes thereto, or any other regulations adopted by an agency of the federal government, that provision of this chapter must be construed to mean that compliance with such regulations must be prima facie evidence of compliance with the provisions of this chapter.

(2) Whenever a provision of this chapter incorporates therein provisions of the Code of Federal Regulations, the provisions so incorporated must be those in effect on the date of effectiveness of this chapter, unless the content of the incorporating section specifies otherwise.

[Statutory Authority: RCW 49.17.010, .040, .050, and .060. 16-09-085 (Order 15-08), § 296-155-008, filed 04/19/16, effective 05/20/16. Order 76-29, § 296-155-008, filed 9/30/76; Order 74-26, § 296-155-008, filed 5/7/74, effective 6/6/74.]

WAC 296-155-009 Equipment whether or not owned by, or under control of the employer.

(1) It is the employer's responsibility to ensure that any defective equipment or tools are not used.

(2) When any tool or piece of equipment fails to meet the requirements of any safety standard or recognized safe practice, you must not use the tool or equipment.

[Statutory Authority: RCW 49.17.010, .040, .050, and .060. 16-09-085 (Order 15-08), § 296-155-009, filed 04/19/16, effective 05/20/16. Statutory Authority: RCW 49.17.040 and 49.17.050. 86-03-074 (Order 86-14), § 296-155-009, filed 1/21/86.]

WAC 296-155-010 Variance and procedure.

Realizing that conditions may exist in operations under which certain state standards will not have practical application, the director of the department of labor and industries or authorized representative may, pursuant to this section, sections 8 or 9 of the Washington Industrial Safety and Health Act (chapter 80, Laws of 1973, RCW 49.17.080 and 49.17.090) and appropriate administrative rules of this state and the department of labor and industries and upon receipt of application and after adequate investigation by the department, permit a variation from these requirements when other means of providing an equivalent measure of protection are afforded. Such variation granted must be limited to the particular case or cases covered in the application for variance and may be revoked for cause. The order granting a variance must be conspicuously posted on the premises and must remain posted during the time it is in effect. A copy of the variance must be available at the work site. All requests for variances from safety and health standards included in this chapter, must be made in writing to the director of the department of labor and industries at Olympia, Washington, or duly authorized representative, Department of Labor and Industries, P.O. Box 44600, Olympia, Washington 98504-4600.

[Statutory Authority: RCW 49.17.010, .040, .050, and .060. 16-09-085 (Order 15-08), § 296-155-010, filed 04/19/16, effective 05/20/16. Statutory Authority: Chapter 49.17 RCW. 94-15-096 (Order 94-07), § 296-155-010, filed 7/20/94, effective 9/20/94; Statutory Authority: RCW 49.17.040 and 49.17.050. 86-03-074 (Order 86-14), § 296-155-010, filed 1/21/86; Order 74-26, 296-155-010, filed 5/7/74, effective 6/6/74.]

WAC 296-155-012 Definitions applicable to all sections of this chapter.

> *Note: Unless the context indicates otherwise, words used in this chapter must have the meaning given in this section. Certain parts of this chapter contain definitions as they apply to that particular part.*

Approved. Approved by the director of the department of labor and industries or authorized representative: Provided, however, That should a provision of this chapter state that approval by an agency or organization other than the department of labor and industries is required, such as Underwriters' Laboratories or the bureau of mines, the provisions of WAC 296-155-006 must apply.

Assistant director. The individual in charge of the division of consultation and compliance, department of labor and industries, or an authorized representative.

Authorized person. A person approved or assigned by the employer to perform a specific type of duty or duties or be at a specific location or locations at the workplace.

Competent person. One who is capable of identifying existing and predictable hazards in the surroundings or working conditions which are unsanitary, hazardous, or dangerous to employees, and who has authorization to take prompt corrective action to eliminate them.

Confined space. A space that:

(1) Is large enough and so configured that an employee can bodily enter and perform assigned work; and

(2) Has limited or restricted means for entry or exit (for example, tanks, vessels, silos, storage bins, hoppers, vaults, and pits are spaces that may have limited means of entry); and

(3) Is not designed for continuous employee occupancy.

Construction work. All or any part of excavation, construction, erection, alteration, repair, demolition, and dismantling, of buildings and other structures and all operations in connection therewith; the excavation, construction, alteration and repair of sewers, trenches, caissons, conduits, pipe lines, roads and all operations pertaining thereto; the moving of buildings and other structures, and to the construction, alteration, repair, or removal of wharfs, docks, bridges, culverts, trestles, piers, abutments or any other construction, alteration, repair or removal work related thereto.

Defect. Any characteristic or condition which tends to weaken or reduce the strength of the tool, object, or structure of which it is a part.

Department. The department of labor and industries.

Designated person.. “Authorized person” as defined in this section.

Director The director of the department of labor and industries, or their designated representative.

Division. The division of consultation and compliance of the department.

Employer. Any person, firm, corporation, partnership, business trust, legal representative, or other business entity which engages in any business, industry, profession, or activity in this state and employs one or more employees or who contracts with one or more persons, the essence of which is the personal labor of such person or persons and includes the state, counties, cities, and all municipal corporations, public corporations, political subdivisions of the state, and charitable organizations: Provided, that any person, partnership, or business entity not having employees, and who is covered by the industrial insurance act must be considered both an employer and an employee.

Equipment. All machinery, devices, tools, facilities, safeguards, and protective construction used in connection with construction operations.

Ground fault circuit interrupter. A fast acting circuit breaker that is sensitive to very low levels of current leakage to ground. The device is designed to limit the electric shock to a current and time duration below that which can cause serious injury.

Hazard. A condition, potential or inherent, which is likely to cause injury, death, or occupational disease.

Hazardous substance. A substance which, by reason of being explosive, flammable, poisonous, corrosive, oxidizing, irritating, or otherwise harmful, is likely to cause death or injury.

Maintenance. The work of keeping a building, machine, roadway, etc., in a state of good repair.

Must. The provision(s) of the standard are mandatory.

Part. A major division, of this chapter, relating to a specific topic or topics and containing various sections, subsections, etc.

Permit-required confined space (permit space). A confined space that has one or more of the following characteristics:

(1) Contains or has a potential to contain a hazardous atmosphere;

(2) Contains a material that has the potential for engulfing an entrant;

(3) Has an internal configuration such that an entrant could be trapped or asphyxiated by inwardly converging walls or by a floor which slopes downward and tapers to a smaller cross-section; or

(4) Contains any other recognized serious safety or health hazard.

Qualified. One who, by possession of a recognized degree, certificate, or professional standing, or who by extensive knowledge, training, and experience, has successfully demonstrated their ability to solve or resolve problems relating to the subject matter, the work, or the project.

Repair. To restore a building, machine, roadway, etc., to an original state after damage or decay.

Safety factor. The ratio of the ultimate breaking strength of a member or piece of material or equipment to the actual working stress or safe load when in use.

Safety and health standard. A standard which requires the adoption or use of one or more practices, means, methods, operations, or processes reasonably necessary or appropriate to provide safe or healthful employment and places of employment.

Substantial. Constructed of such strength, of such material, and of such workmanship, that the object referred to will withstand all normal wear, shock and usage.

Standard safeguard. A device designed and constructed with the object of removing the hazard of accident incidental to the machine, appliance, tool, building, or equipment to which it is attached.

Standard safeguards must be constructed of either metal or wood or other suitable material or a combination of these. The final determination of the sufficiency of any safeguard rests with the director of the department of labor and industries through the division of consultation and compliance.

Suitable. That which fits, or has the qualities or qualifications to meet a given purpose, occasion, condition, function, or circumstance.

Working day. A calendar day, except Saturdays, Sundays, and legal holidays as set forth in RCW 1.16.050, as now or hereafter amended, and for the purposes of the computation of time within which an act is to be done under the provisions of this chapter, must be computed by excluding the first working day and including the last working day.

Worker, personnel, man, person, employee, and other terms of like meaning, unless the context of the provision containing such term indicates otherwise. An employee of an employer who is employed in the business of their employer whether by way of manual labor or otherwise and every person in this state who is engaged in the employment of or who is working under an independent contract the essence of which is their personal labor for an employer whether by manual labor or otherwise.

Work place. Any plant, yard, premises, room, or other place where an employee or employees are employed for the performance of labor or service over which the employer has the right of access or control, and includes, but is not limited to, all work places covered by industrial insurance under Title 51 RCW, as now or hereafter amended.

Abbreviations used in this chapter:

ANSI. American National Standards Institute.
API. American Petroleum Institute.
ASA. American Standards Association.
ASAE. American Society of Agricultural Engineers.
ASHRE. American Society of Heating and Refrigeration Engineers.
ASME. American Society of Mechanical Engineers.
ASTM. American Society of Testing and Materials.
AWS. American Welding Society.
BTU British thermal unit.
BTUH. British thermal unit per hour.
CFM. Cubic feet per minute.
CFR. Code of Federal Register.
CGA. Compressed Gas Association.
CIE. Commission Internationale de l' Eclairage.
DOT. Department of transportation.
FRP. Fiberglass reinforced plastic.
GPM. Gallons per minute.
ICC. Interstate Commerce Commission.

ID. Inside diameter.
LPG. Liquefied petroleum gas.
MCA. Manufacturing Chemist Association.
MSHA. United States Department of Labor, Mine Safety and Health Administration.
NBFU. National Board of Fire Underwriters.
NEMA. National Electrical Manufacturing Association.
NFPA. National Fire Protection Association.
NTP. Normal temperature and pressure.
OD. Outside diameter.
PSI. Pounds per square inch.
PSIA. Pounds per square inch absolute.
PSIG. Pounds per square inch gauge.
RMA. Rubber Manufacturers Association.
SAE. Society of Automotive Engineers.
TFI. The Fertilizer Institute.
TSC. Trailer Standard Code.
UL. Underwriters' Laboratories, Inc.
USASI. United States of America Standards Institute.
USC. United States Code.
USCG. United States Coast Guard.
WAC. Washington Administrative Code.
WISHA. Washington Industrial Safety and Health Act of 1973.

[Statutory Authority: RCW 49.17.010, .040, .050, and .060. 16-09-085 (Order 15-08), § 296-155-00612, filed 04/19/16, effective 05/20/16. Statutory Authority: Chapter 49.17 RCW. 95-04-007 (Order 94-24), § 296-155-012, filed 1/18/95, effective 3/1/95; RCW 49.17.040 and 49.17.050. 86-03-074 (Order 86-14), § 296-155-012, filed 1/21/86; Order 74-26, § 296-155-012, filed 5/7/74, effective 6/6/74.]

WAC 296-155-015 Education and first-aid standards.

You must comply with such standards and systems of education for safety as is, from time to time, prescribed for such employer by the director of labor and industries or by statute. Refer to WAC 296-155-100 through 296-155-135 for additional requirements.

[Statutory Authority: RCW 49.17.010, .040, .050, and .060. 16-09-085 (Order 15-08), § 296-155-115, filed 04/19/16, effective 05/20/16. Statutory Authority: Chapter 49.17 RCW. 94-15-096 (Order 94-07), § 296-155-015, filed 7/20/94, effective 9/20/94; Order 74-26, § 296-155-015, filed 5/7/74, effective 6/6/74.]

WAC 296-155-020 Housekeeping.

(1) You must keep all places of employment clean to the extent that the nature of the work allows.

(2) To facilitate cleaning, you must keep every floor, working surface, and passageway free from protruding nails, splinters, loose boards or openings.

(3) You must perform cleaning and sweeping in such a manner as to minimize the contamination of the air with dust.

(4) In areas where workers may pass or perform duties, you must remove all debris and accumulations of material. You must cover hoses and electrical conductors across aisles or passageways or suspend them overhead so that there is no tripping hazard.

(5) Where mechanical handling equipment is used, you must allow sufficient safe clearances for aisles, at loading docks, through doorways and wherever turns or passages must be made. You must mark such aisles and passageways.

(6) Storage of material must not create a hazard. You must store bags, containers, bundles, construction materials and other equipment in tiers, stacked, blocked or interlocked. They must be limited in height so that they are stable and secure against falling, sliding, or collapse.

(7) You must maintain free access at all times to all exits, fire alarm boxes, fire extinguishing equipment, and any other emergency equipment. Free access means clear of all obstructions.

(8) You must keep working and storage areas free from accumulation of materials that pose hazards of tripping, fire, explosion, or pest harborage. You must exercise vegetation control.

(9) You must keep all lunchrooms, washrooms and restrooms in a clean and sanitary condition. Garbage cans in lunchrooms and restrooms must be equipped with fitted covers and the contents disposed of daily.

(10) During the course of construction, alteration, repair or demolition of buildings and structures, you must ensure continuous clean-up of their work area, including removal of all rubble, scrap, boxes, crates and excess material to trash disposal areas.

(11) You must provide containers for the collection and separation of waste, trash, oily or used rags, and other refuse. Containers used for garbage and other oily, flammable or hazardous wastes, such as caustics, acids, harmful dusts or similar materials must be equipped with covers. You must dispose of common garbage and other waste at frequent and regular intervals. You must store and dispose of chemical agents or substances which might react to create a hazardous condition separately. You must handle, accumulate and dispose of all hazardous wastes which are subject to the requirements of chapter 173-303 WAC in accordance with that chapter.

(12) You must maintain all floors and walkways in good condition. You must repair or replace loose or broken components. You must ensure secure footing on all floors and walkways.

[Statutory Authority: RCW 49.17.010, .040, .050, and .060. 16-09-085 (Order 15-08), § 296-155-020, filed 04/19/16, effective 05/20/16. Statutory Authority: RCW 49.17.040 and 49.17.050. 86-03-074 (Order 86-14), § 296-155-020, filed 1/21/86; Order 74-26, § 296-155-020, filed 5/7/74, effective 6/6/74.]

WAC 296-155-030 Acceptable certifications.

(1) **Pressure vessels**. You must deem current and valid certification by an insurance company or regulatory authority as acceptable evidence of safe installation, inspection, testing of pressure vessels provided by the employer.

(2) **Boilers**. You must deem boilers provided by the employer to be in compliance with the requirements of this section when evidence of current and valid certification by an insurance company or regulatory authority attesting to the safe installation, inspection, and testing is presented.

(3) **Other requirements**. Regulations prescribing specific requirements for other types of pressure vessels and similar equipment are contained in Parts D and M of this chapter.

[Statutory Authority: RCW 49.17.010, .040, .050, and .060. 16-09-085 (Order 15-08), § 296-155-030, filed 04/19/16, effective 05/20/16. Order 74-26, § 296-155-030, filed 5/7/74, effective 6/6/74.]

WAC 296-155-035 General requirements.

(1) The use of any machinery, tool, material, or equipment which is not in compliance with any applicable requirements of this chapter is prohibited. You must either identify such machine, tool, material, or equipment as unsafe by tagging or locking the controls to render them inoperable or you must physically remove it from its place of operation.

(2) You must permit only those employees qualified by training or experience to operate equipment and machinery.

(3) You must use safeguards provided for employee protection.

(4) You must wear suitable clothing for the job. You must wear sufficient and proper clothing to assist in preventing scratches, abrasions, slivers, sunburn, hot liquid burns, or similar hazards. You must not wear loose or ragged clothing, scarfs or ties while working around moving machinery.

(5) Where work is in progress above workers, you must provide a catch platform or other means to protect those working below. You must notify all workers. You must maintain one completed floor between workers and steel or concrete work above.

(6) Employees must report to their employers the existence of any unsafe equipment or method or any other hazard which, to their knowledge is unsafe and where such unsafe equipment or method or other hazard exists in violation of this chapter you must correct it.

(7) Nothing herein contained prevents the use of existing equipment during its lifetime provided it is properly safeguarded, maintained in good condition, in conformity with applicable safety and health standards, and conforms to safety factors for the material used, as herein provided.

(8) As construction progresses, you must secure or brace the component parts of structures to prevent collapse or failure.

(9) You must ensure prompt and safe removal of injured employees from elevated work locations, trenches and excavations prior to commencement of work.

[Statutory Authority: RCW 49.17.010, .040, .050, and .060. 16-09-085 (Order 15-08), § 296-155-035, filed 04/19/16, effective 05/20/16. Statutory Authority: RCW 49.17.040 and 49.17.050. 86-03-074 (Order 86-14), § 296-155-035, filed 1/21/86; Order 74-26, § 296-155-035, filed 5/7/74, effective 6/6/74.]

WAC 296-155-040 Safe place standards.

(1) You must furnish to each employee a place of employment free from recognized hazards that are causing or likely to cause serious injury or death to employees.

(2) You must require safety devices, furnish safeguards, and you must adopt and use practices, methods, operations, and processes which are reasonably adequate to render such employment and place of employment safe. You must do everything reasonably necessary to protect the life and safety of employees.

(3) You must not require any employee to go or be in any employment or place of employment which is hazardous to the employee.

(4) **You must not fail or neglect:**

(a) To provide and use safety devices and safeguards.

(b) To adopt and use methods and processes reasonably adequate to render the employment and place of employment safe.

(c) To do everything reasonably necessary to protect the life and safety of employees.

(5) No employer, owner, or lessee of any real property is permitted to construct or cause to be constructed any place of employment that is hazardous to the employee.

(6) **You must not do any of the following:**

(a) Remove, displace, damage, destroy or carry off any safety device, safeguard, notice, or warning, furnished for use in any employment or place of employment.

(b) Interfere in any way with the use thereof by any other person.

(c) Interfere with the use of any method or process adopted for the protection of any employee, including themselves, in such employment, or place of employment.

(d) Fail or neglect to do everything reasonably necessary to protect the life and safety of employees.

(7) The use of intoxicants or debilitating drugs while on duty is prohibited. Employees under the influence of intoxicants or drugs must not be permitted in or around worksites. This subsection (7) does not apply to employees taking prescription drugs or narcotics as directed and prescribed by a physician, provided such use does not endanger the employee or others.

[Statutory Authority: RCW 49.17.010, .040, .050, and .060. 16-09-085 (Order 15-08), § 296-155-040, filed 04/19/16, effective 05/20/16. Statutory Authority: Chapter 49.17 RCW. 94-15-096 (Order 94-07), § 296-155-040, filed 7/20/94, effective 9/20/94; Order 74-26, § 296-155-040, filed 5/7/74, effective 6/6/74.]

PART B-1
OCCUPATIONAL HEALTH AND ENVIRONMENTAL CONTROL

LAST UPDATED: 05/20/2016

WAC 296-155-100 Management's responsibility. 1

WAC 296-155-105 Employee's responsibility. 2

WAC 296-155-110 Accident prevention program. 2

WAC 296-155-115 Safety bulletin board. 4

WAC 296-155-120 First-aid training and certification. 4

WAC 296-155-125 First-aid supplies. 5

WAC 296-155-130 First-aid station. 5

WAC 296-155-140 Sanitation. 6

WAC 296-155-145 Occupational noise exposure. 10

WAC 296-155-150 Ionizing radiation. 10

WAC 296-155-155 Nonionizing radiation. 10

WAC 296-155-160 Gases, vapors, fumes, dusts, and mists. 11

WAC 296-155-165 Lighting and illumination. 12

WAC 296-155-170 Ventilation. 12

WAC 296-155-173 Methylenedianiline. 13

WAC 296-155-17301 Scope and application. 13
WAC 296-155-17303 Definitions. 14
WAC 296-155-17305 Permissible exposure limits. 15
WAC 296-155-17307 Communication among employers. 15
WAC 296-155-17309 Emergency situations. 16
WAC 296-155-17311 Exposure monitoring. 16
WAC 296-155-17313 Regulated areas. 18
WAC 296-155-17315 Methods of compliance. 18
WAC 296-155-17317 Respiratory protection 19
WAC 296-155-17319 Protective work clothing and equipment. 20
WAC 296-155-17321 Hygiene facilities and practices. 21
WAC 296-155-17323 Communication of hazards. 22
WAC 296-155-17325 Housekeeping. 24
WAC 296-155-17327 Medical surveillance. 24
WAC 296-155-17329 Medical removal. 28
WAC 296-155-17331 Recordkeeping. 30
WAC 296-155-17333 Observation of monitoring. 33
WAC 296-155-17337 Appendices. 33
WAC 296-155-17339 Startup dates. 34
WAC 296-155-17341 Appendix A to WAC 296-155-173--Substance data sheet, for 4-4'-methylenedianiline. 34
WAC 296-155-17343 Appendix B to WAC 296-155-173--Substance technical guidelines, MDA. 37
WAC 296-155-17345 Appendix C to WAC 296-155-173--Medical surveillance guidelines for MDA. 38
WAC 296-155-17347 Appendix D to WAC 296-155-173--Sampling and analytical methods for MDA monitoring and measurement procedures. .. 40

WAC 296-155-174 Cadmium. 43

WAC 296-155-176 Lead. 68

WAC 296-155-17603 Scope. 68
WAC 296-155-17605 Definitions. 69
WAC 296-155-17607 Permissible exposure limit. 69
WAC 296-155-17609 Exposure assessment. 69
WAC 296-155-17611 Methods of compliance. 74
WAC 296-155-17613 Respiratory protection. 75
WAC 296-155-17615 Protective work clothing and equipment. 76
WAC 296-155-17617 Housekeeping. 77
WAC 296-155-17619 Hygiene facilities and practices. 78
WAC 296-155-17621 Medical surveillance. 79
WAC 296-155-17623 Medical removal protection. 83
WAC 296-155-17625 Communication of hazards. 85
WAC 296-155-17627 Signs - General. 87
WAC 296-155-17629 Recordkeeping. 87
WAC 296-155-17631 Observation of monitoring. 89
WAC 296-155-17650 Appendix A to WAC 296-155-176-Substance data sheet for occupational exposure to lead. 90
WAC 296-155-17652 Appendix B to WAC 296-155-176-Employee standard summary. 93
WAC 296-155-17654 Appendix C to WAC 296-155-176-Medical surveillance guidelines. 104

WAC 296-155-100 Management's responsibility.

(1) It is the responsibility of management to establish, supervise, and enforce, in a manner which is effective in practice:

(a) A safe and healthful working environment.

(b) An accident prevention program as required by these standards.

(c) Training programs to improve the skill and competency of all employees in the field of occupational safety and health.

(2) You must instruct employees required to handle or use poisons, caustics, and other harmful substances regarding the safe handling and use, and be made aware of the potential hazards, personal hygiene, and personal protective measures required.

(3) In job site areas where harmful plants or animals are present, you must instruct employees who may be exposed regarding the potential hazards, and how to avoid injury, and the first aid procedures to be used in the event of injury.

(4) You must instruct employees required to handle or use flammable liquids, gases, or toxic materials in the safe handling and use of these materials and made aware of the specific requirements contained in Parts B, D, and other applicable parts of this standard.

(5) Permit-required confined spaces. The requirements of chapters 296-24, 296-62 and 296-155 WAC apply.

(6) You must ensure that work assignments place no employee in a position or location not within ordinary calling distance of another employee able to render assistance in case of emergency.

> *Note: This subsection does not apply to operators of motor vehicles, watchpersons or other jobs which, by their nature, are single employee assignments. However, a definite procedure for checking the welfare of all employees during working hours should be instituted and all employees so advised.*

(7) You must post and keep posted a notice or notices (Job Safety and Health Protection - Form F416-081-909) to be furnished by the department of labor and industries, informing employees of the protections and obligations provided for in the act and that for assistance and information, including copies of the act, and of specific safety and health standards employees should contact the employer or the nearest office of the department of labor and industries. You must post such notice or notices at each establishment in a conspicuous place or places where notices to employees are customarily posted. You must take steps to ensure that such notices are not altered, defaced, or covered by other material.

[Statutory Authority: RCW 49.17.010, .040, .050, and .060. 16-09-085 (Order 15-08), § 296-155-100, filed 04/19/16, effective 05/20/16. Statutory Authority: RCW 49.17.010, .040, .050, and .060. 06-05-027 (Order 05-45), § 296-155-100, filed 02/07/06, effective 04/01/06. Statutory Authority: Chapter 49.17 RCW. 95-04-007, § 296-155-100, filed 1/18/95, effective 3/1/95; 94-15-096 (Order 94-07), § 296-155-100, filed 7/20/94, effective 9/20/94; 91-24-017 (Order 91-07),§ 296-155-100, filed 11/22/91, effective 12/24/91. Statutory Authority: RCW 49.17.040 and 49.17.050. 86-03-074 (Order 86-14), § 296-155-100, filed 1/21/86; Order 76-6, § 296-155-100, filed 3/1/76; Order 74-26, § 296-155-100, filed 5/7/74, effective 6/6/74.]

WAC 296-155-105 Employee's responsibility.

(1) Employees must coordinate and cooperate with all other employees in an attempt to eliminate accidents.

(2) Employees must study and observe all safety standards governing their work.

(3) Employees must apply the principles of accident prevention in their daily work and must use proper safety devices and protective equipment as required by their employment or employer.

(4) Employees must properly care for all personal protective equipment.

(5) Employees must make a report, on the day of the incident, to their immediate supervisor, of each industrial injury or occupational illness, regardless of the degree of severity.

[Statutory Authority: RCW 49.17.010, .040, .050, and .060. 16-09-085 (Order 15-08), § 296-155-105, filed 04/19/16, effective 05/20/16. Order 74-26, § 296-155-105, filed 5/7/74, effective 6/6/74.]

WAC 296-155-110 Accident prevention program.

(1) **Exemptions**. Workers of employers whose primary business is other than construction, who are engaged solely in maintenance and repair work, including painting and decorating, are exempt from the requirement of this section provided:

   (a) The maintenance and repair work, including painting and decorating, is being performed on the employer's premises, or facility.

   (b) The length of the project does not exceed one week.

   (a) The employer is in compliance with the requirements of WAC 296-800-140 Accident prevention program, and WAC 296-800-130, Safety committees and safety meetings.

(2) You must develop a formal accident-prevention program, tailored to the needs of the particular plant or operation and to the type of hazard involved. The department may be contacted for assistance in developing appropriate programs.

(3) The following are the minimal program elements for all employers:

A safety orientation program describing the employer's safety program and including:

(a) How, where, and when to report injuries, including instruction as to the location of first-aid facilities.

(b) How to report unsafe conditions and practices.

(c) The use and care of required personal protective equipment.

(d) The proper actions to take in event of emergencies including the routes of exiting from areas during emergencies.

(e) Identification of the hazardous gases, chemicals, or materials involved along with the instructions on the safe use and emergency action following accidental exposure.

(f) A description of the employer's total safety program.

(g) An on-the-job review of the practices necessary to perform the initial job assignments in a safe manner.

(4) You must outline each accident-prevention program in written format.

(5) You must conduct crew leader-crew safety meetings as follows:

(a) You must hold crew leader-crew safety meetings at the beginning of each job, and at least weekly thereafter.

(b) You must tailor crew leader-crew meetings to the particular operation.

(6) Crew leader-crew safety meetings must address the following:

(a) A review of any walk-around safety inspection conducted since the last safety meeting.

(b) A review of any citation to assist in correction of hazards.

(c) An evaluation of any accident investigations conducted since the last meeting to determine if the cause of the unsafe acts or unsafe conditions involved were properly identified and corrected.

(d) You must document attendance.

(e) You must document subjects discussed.

> *Note: Subcontractors and their employees may, with the permission of the general contractor, elect to fulfill the requirements of subsection (5)(a) and (b) of this section by attending the prime contractors crew leader-crew safety meeting. Any of the requirements of subsections (6)(a), (b), (c), and (7) of this section not satisfied by the prime contractors safety meetings must be the responsibility of the individual employers.*

(7) You must prepare minutes of each crew leader-crew meeting and you must maintain copy at the location where the majority of the employees of each construction site report for work each day.

(8) You must retain minutes of crew leader-crew safety meetings by the employer for at least one year and you must make them available for review by personnel of the department, upon request.

(9) You must conduct walk-around safety inspections as follows:

(a) At the beginning of each job, and at least weekly thereafter, you must conduct a walk-around safety inspection jointly by one member of management and one employee, elected by the employees, as their authorized representative.

(b) You must document walk-around safety inspections and such documentation must be available for inspection by personnel of the department.

(c) You must maintain records of walk-around inspections until the completion of the job.

[Statutory Authority: RCW 49.17.010, .040, .050, and .060. 16-09-085 (Order 15-08), § 296-155-110, filed 04/19/16, effective 05/20/16. Statutory Authority: RCW 49.17.010, .040, .050. 01-11-038 (Order 99-36), § 296-155-110, filed 05/09/01, effective 09/01/01. Statutory Authority: RCW 49.17.010, .040, .050. 00-08-078 (Order 99-15), § 296-155-110, filed 04/04/00, effective 07/01/00. Statutory Authority: Chapter 49.17 RCW. 94-15-096 (Order 94-07), § 296-155-110, filed 7/20/94, effective 9/20/94; 92-09-148 (Order 92-01), § 296-155-110, filed 4/22/92, effective 5/25/92. Statutory Authority: RCW 49.17.040 and 49.17.050. 86-03-074 (Order 86-14), § 296-155-110, filed 1/21/86; Order 74-26, § 296-155-110, filed 5/7/74, effective 6/6/74.]

WAC 296-155-115 Safety bulletin board.

You must install and maintain in every fixed establishment (the place where employees regularly report to work) employing 8 or more persons, a safety bulletin board sufficient in size to display and post safety bulletins, newsletters, posters, accident statistics and other safety educational material.

[Statutory Authority: RCW 49.17.010, .040, .050, and .060. 16-09-085 (Order 15-08), § 296-155-115, filed 04/19/16, effective 05/20/16. Order 74-26, § 296-155-115, filed 5/7/74, effective 6/6/74.]

WAC 296-155-120 First-aid training and certification.

This section is designed to ensure that all employees in this state are afforded quick and effective first-aid attention in the event of an on the job injury. To achieve this purpose the presence of personnel trained in first-aid procedures at or near those places where employees are working is required. Compliance with the provisions of this section may require the presence of more than one first-aid trained person.

(1) You must have available at all worksites, where a crew is present, a person or persons holding a valid first-aid certificate.

(2) All crew leaders, supervisors or persons in direct charge of one or more employees must have a valid first-aid certificate.

(3) For the purposes of this section, a crew means a group of two or more employees working at any worksite.

> *Note: The requirement that all crew leaders, supervisors or person in direct charge of one or more employees (subsection (3) of this section) applies even if other first-aid trained person(s) are available. In emergencies, crew leaders will be permitted to work up to thirty days without having the required certificate, providing an employee in the crew or another crew leaders in the immediate work area has the necessary certificate.*

[Statutory Authority: RCW 49.17.010, .040, .050, and .060. 16-09-085 (Order 15-08), § 296-155-120, filed 04/19/16, effective 05/20/16. Statutory Authority: RCW 49.17.010, .040, .050, and .060. 04-07-160 (Order 03-31), § 296-155-120, filed 03/23/04, effective 05/01/04. Statutory Authority: RCW 49.17.010, .040, .050. 01-11-038 (Order 99-36), § 296-155-120, filed 05/09/01, effective 09/01/01. Statutory Authority: RCW 49.17.010, .040, .050. 00-01-038 (Order 99-08), § 296-155-120, filed 12/07/99, effective 02/01/2000. Statutory Authority: Chapter 49.17 RCW. 94-15-096 (Order 94-07), § 296-155-120, filed 7/20/94, effective 9/20/94. Statutory Authority: RCW 49.17.040 and 49.17.050. 86-03-074 (Order 86-14), § 296-155-120, filed 1/21/86; Order 74-26, § 296-155-120, filed 5/7/74, effective 6/6/74.]

WAC 296-155-125 First-aid supplies.

(1) The first-aid kits and supplies requirements of the safety and health core rules, chapter 296-800 WAC, apply within the scope of chapter 296-155 WAC.

(2) All vehicles used to transport work crews must be equipped with first-aid supplies.

(3) When practical, a poster must be fastened and maintained either on or in the cover of each first-aid kit and at or near all phones plainly stating the worksite address or location, and the phone numbers of emergency medical responders for the worksite.

(4) Requirements of WAC 296-800-15030, Make sure emergency washing facilities are functional and readily accessible, apply within the scope of chapter 296-155 WAC.

[Statutory Authority: RCW 49.17.010, .040, .050, and .060. 06-05-027 (Order 05-45), § 296-155-125, filed 02/07/06, effective 04/01/06. Statutory Authority: RCW 49.17.010, .040, .050. 01-11-038 (Order 99-36), § 296-155-125, filed 05/09/01, effective 09/01/01. Statutory Authority: RCW 49.17.010, .040, .050. 00-01-038 (Order 99-08), § 296-155-125, filed 12/07/99, effective 02/01/2000. Statutory Authority: Chapter 49.17 RCW. 94-15-096 (Order 94-07), § 296-155-125, filed 7/20/94, effective 9/20/94. Statutory Authority: RCW 49.17.040 and 49.17.050. 86-03-074 (Order 86-14), § 296-155-125, filed 1/21/86; Order 74-26, § 296-155-125, filed 5/7/74, effective 6/6/74.]

WAC 296-155-130 First-aid station.

Employers with 50 or more employees per shift at one location must establish a first-aid station in accordance with the requirements in chapter 296-800 WAC.

[Statutory Authority: RCW 49.17.010, .040, .050, and .060. 16-09-085 (Order 15-08), § 296-155-130, filed 04/19/16, effective 05/20/16. Statutory Authority: RCW 49.17.010, .040, .050. 01-11-038 (Order 99-36), § 296-155-130, filed 05/09/01, effective 09/01/01. Statutory Authority: RCW 49.17.010, .040, .050. 00-01-038 (Order 99-08), § 296-155-130, filed 12/07/99, effective 02/01/2000. Statutory Authority: RCW 49.17.040 and 49.17.050. 86-03-074 (Order 86-14), § 296-155-130, filed 1/21/86; Order 74-26, § 296-155-130, filed 5/7/74, effective 6/6/74.]

WAC 296-155-140 Sanitation.

(1) **Potable water.**

(a) You must provide an adequate supply of potable water in all places of employment.

(b) Portable containers used to dispense drinking water must be capable of being tightly closed and equipped with a tap. Water must not be dipped from containers.

(c) You must clearly mark any container used to distribute drinking water as to the nature of its contents and not used for any other purpose.

(d) The common drinking cup is prohibited.

(e) Where single service cups (to be used but once) are supplied, you must provide both a sanitary container for the unused cups and a receptacle for disposing of the used cups.

(f) You must thoroughly clean all water containers used to furnish drinking water at least once each week or more often as conditions require.

(g) The requirements of this subsection do not apply to mobile crews or to normally unattended work locations as long as employees working at these locations have transportation immediately available, within the normal course of their duties, to nearby facilities otherwise meeting the requirements of this section.

(h) The following definitions apply:

(i) **Mobile crew**. A work crew that routinely moves to a different work location periodically. Normally a mobile crew is not at the same location all day.

(ii) **Normally unattended work location**. An unattended site that is visited occasionally by one or more employees.

(iii) **Nearby facility**. A sanitary facility that is within three minutes travel by the transportation provided.

(iv) **Potable water**. Water that is suitable for drinking by the public and meets the requirements of chapter 246-290 and 246-291 WAC.

(2) **Wash water.**

(a) You must provide clean, tepid wash water, between 70 and 100 degrees Fahrenheit, at all construction sites.

(b) You must provide individual hand towels. You must provide both a sanitary container for the unused towels and a receptacle for disposal of used towels.

(c) You must provide hand soap, industrial hand cleaner or similar cleansing agents. Cleansing agents must be adequate to remove any paints, coatings, herbicides, insecticides or other contaminants.

(d) The requirements of this subsection do not apply to mobile crews or to normally unattended work locations as long as employees working at these locations have transportation immediately available, within the normal course of their duties, to nearby facilities otherwise meeting the requirements of this section.

(e) You must not use gasoline or solvents for personal cleaning.

(f) Wash water areas will be maintained in a dry condition. You must eliminate slipping or other hazards from the wash water area before it is acceptable for use.

(3) **Nonpotable water.**

(a) You must identify outlets for nonpotable water, such as water for industrial or firefighting purposes only, by signs meeting the requirements of Part E of this chapter, to indicate clearly that the water is unsafe and is not to be used for drinking, washing or cooking purposes.

(b) You must ensure that there is no cross-connection, open or potential, between a system furnishing potable water, a system furnishing nonpotable water or a system furnishing wash water.

(4) **Toilets.**

(a) The provisions of this section apply to both portable chemical toilets and to flush toilets, except where flush toilets are used the requirements of WAC 296-800-230 apply instead of (b) of this subsection.

(b) You must provide accessible toilets for employees according to the following table:

TABLE B-1

Number of Employees	Toilets Required
1-10	1
1-25	2
26-40	3
41-60	4
61-80	5
Over 80	one additional toilet for each additional 20 employees or any fraction thereof.

(c) When the employer provides both flush and portable chemical toilets, the number of employees allowed to be served by the flush toilets, per WAC 296-800-230 will be calculated. That number will be subtracted from the total number of employees and the employer will be required to provide an adequate number of portable chemical toilets for the number of remaining employees, as required by (b) of this subsection.

(d) You must maintain toilets in clean, sanitary and functional condition. You must provide internal latches to secure the units from inadvertent entry. Where there are 20 or more employees consisting of both sexes, you must provide facilities for each sex.

(i) You must properly clean each unit on a routine basis.

(ii) You must maintain chemicals, toilet tissue and sanitary seat covers in a supply sufficient for use during the entire shift.

(iii) You must immediately remove any defective or inadequate unit from service.

(e) Specifications. The following specifications apply:

(i) A noncaustic chemical toilet (portable chemical toilet is) a self-contained unit equipped with a waste receiving chemical holding container.

(ii) Portable chemical toilets consisting of only a holding tank, commonly referred to as “elevator units” or “elevator toilets” are not acceptable. “Elevator units” may be used if they are individually located in a lockable room which affords privacy. When this type unit is used in a private individual lockable room the entire room will be considered a toilet facility, as such the room will meet all requirements of toilet facilities and be inspected in accordance with subsection (5)(b)(iii) of this section.

(iii) Rooms, buildings or shelters housing toilets must be of sound construction, easy to clean, provide shelter and provide privacy. The toilet rooms must be ventilated to the outside and adequately lighted. All openings into the toilet room must be covered with 16-mesh screen.

(iv) You must service toilets on a regular schedule. Servicing must include the use of a disinfectant for cleaning urinals and seats, removing waste from containers, recharging containers with an odor controlling chemical and installing an adequate supply of toilet tissue and seat covers.

(v) You must perform service in accordance with local codes by approved servicing organizations. You must dispose of or discharge waste in accordance with requirements of local health department regulations.

(vi) Waste containers must be fabricated from impervious materials, e.g. plastic, steel, fiberglass or their equivalent. Containers must be water tight and capable of containing the chemical waste in a sanitary manner. The container must be fitted to the building in a manner so as to prevent insects from entering from the exterior of the building. Containers must be adequate in size to be used by the number of persons, according to the schedule for minimum requirements, without filling the container to more than half of its volume before regularly scheduled servicing.

(vii) Removal of waste must be handled in a clean and sanitary manner by means of a vacuum hose and received by a leak-proof tank truck. All valves on the tank must be leak-proof.

(viii) You must make provisions so service trucks have a clear approach and convenient access to the toilets to be serviced.

(ix) Disposal of waste from tank trucks must be in accordance with local health department requirements. In the absence of provisions by local health departments, waste must be disposed of through municipal or district sanitary sewage systems. Municipal or area sanitary sewage districts must provide sewage disposal locations and facilities which are adequate and convenient for duly authorized toilet service organizations.

(f) The requirements of this subsection do not apply to mobile crews or to normally unattended work locations as long as employees working at these locations have transportation immediately available, within the normal course of their duties, to nearby facilities otherwise meeting the requirements of this section.

(5) **Employer responsibilities.**

(a) On multi-employer worksites, the prime contractor must ensure that the requirements of this section are met. Each employer is responsible for seeing that facilities for their own employees are provided.

(b) You must ensure, at the beginning of each shift, that the sanitation facilities required by this section are inspected. If any facility or unit fails to meet the following requirements, you must take immediate corrective action. You must document and maintain such action at the site for at least 72 hours. Inspection must establish:

(i) Potable water: Sufficient supply of water, sufficient supply of cups, container integrity, cleanliness of unit and area, capacity of trash receptacle (empty).

(ii) Wash water: Sufficient supply of clean water, proper temperature, sufficient supply of towels, sufficient supply of cleansing agents, container integrity, cleanliness of unit and area without the presence of physical hazards, capacity of trash receptacle (empty).

(iii) Toilets: Sufficient supply of toilet tissue and sanitary seat covers, capacity and condition of chemical agent, capacity and condition of holding tank, cleanliness of unit and area without the presence of physical hazards, physical and structural condition of unit, condition of lock, condition of toilet seat and tissue holder, absence of all foreign debris.

(c) The location of the facilities required by subsections (1), (2) and (4) of this section must be as close as practical to the highest concentration of employees.

(i) On multistory structures they must be furnished on every third floor.

(ii) At all sites they must be located within 200 feet horizontally of all employees.

(iii) The requirements of subsection (5)(c)(i) and (ii) do not apply to mobile crews or to normally unattended work locations as long as employees working at these locations have transportation immediately available, within the normal course of their duties, to nearby facilities otherwise meeting the requirements of this section.

(6) **Food handling**. All employees' food service facilities and operations must meet the applicable laws, ordinances and regulations of the jurisdictions in which they are located.

(7) **Temporary sleeping quarters**. When temporary sleeping quarters are provided, they must be heated, ventilated and lighted.

[Statutory Authority: RCW 49.17.010, .040, .050, and .060. 16-09-085 (Order 15-08), § 296-155-140, filed 04/19/16, effective 05/20/16. Statutory Authority: RCW 49.17.010, .040, .050, and .060. 12-24-071 (Order 12-20), § 296-155-140, filed 12/04/12, effective 01/04/13. Statutory Authority: RCW 49.17.010, .040, .050. 01-11-038 (Order 99-36), § 296-155-140, filed 05/09/01, effective 09/01/01. Statutory Authority: Chapter 49.17 RCW. 94-15-096 (Order 94-07), § 296-155-140, filed 7/20/94, effective 9/20/94; 89-11-035 (Order 89-03), § 296-155-140, filed 5/15/89, effective 6/30/89. Statutory Authority: RCW 49.17.040 and 49.17.050. 86-03-074 (Order 86-14), § 296-155-140, filed 1/21/86; Order 74-26, § 296-155-140, filed 5/7/74, effective 6/6/74.]

WAC 296-155-145 Occupational noise exposure.

The occupational noise exposure requirements of chapter 296-817 WAC, Hearing loss prevention (noise), apply.

[Statutory Authority: RCW 49.17.010, .040, .050, and .060. 03-11-060 (Order 02-16), § 296-155-145, filed 05/19/03, effective 08/01/03. Statutory Authority: RCW 49.17.040 and 49.17.050. 85-01-022 (Order 84-24), § 296-155-145, filed 12/11/84; 83-15-017 (Order 83-19), § 296-155-145, filed 7/13/83, effective 9/12/83; Order 76-29, § 296-155-145, filed 9/30/76; Order 74-26, § 296-155-145, filed 5/7/74, effective 6/6/74.]

WAC 296-155-150 Ionizing radiation.

(1) In construction and related activities involving the use of sources of ionizing radiation, the pertinent provisions of the Nuclear Regulatory Commission's Standards for Protection Against Radiation, relating to protection against occupational radiation exposure, apply.

(2) Any activity which involves the use of radioactive material or x-ray, whether or not under license from the Nuclear Regulatory Commission, must be performed by competent persons specially trained in the proper and safe operation of such equipment. In the case of materials used under commission license, only persons actually licensed, or competent persons under direction and supervision of the licensee are permitted to perform such work.

[Statutory Authority: RCW 49.17.010, .040, .050, and .060. 16-09-085 (Order 15-08), § 296-155-150, filed 04/19/16, effective 05/20/16. Statutory Authority: Chapter 49.17 RCW. 94-15-096 (Order 94-07), § 296-155-150, filed 7/20/94, effective 9/20/94; Order 74-26, § 296-155-150, filed 5/7/74, effective 6/6/74.]

WAC 296-155-155 Nonionizing radiation.

(1) Only qualified and trained employees must be assigned to install, adjust, and operate laser equipment.

(2) Proof of qualification of the laser equipment operator must be available and in possession of operator at all times.

(3) You must provide employees, when working in areas in which a potentially hazardous exposure (see WAC 296-62-09005(4)) to direct or reflected laser radiation exists, with antilaser eye protection devices specified in Part C of this chapter.

(4) Areas in which Class II and III lasers are used must be posted with standard laser warning placards.

(5) You must utilize beam shutters or caps, or the laser turned off, when laser transmission is not actually required. When the laser is left unattended for a substantial period of time, such as during lunch hour, overnight, or at change of shifts, the laser must be turned off.

(6) You must use only mechanical or electronic means as a detector for guiding the internal alignment of the laser.

(7) The laser beam must not be directed at employees.

(8) When it is raining or snowing, or when there is dust or fog in the air, and it is impracticable to cease laser system operation, you must keep employees out of range of the area of source and target during such weather conditions.

(9) Laser equipment must bear a conspicuously displayed label to indicate hazard classification. This label must be prepared in accordance with 21 CFR 1040.10.

(10) You must use only Class I, II, or III laser equipment. You must not use Class IV laser equipment.

(11) You must set up laser unit in operation above the heads of the employees, when possible.

(12) You must not expose employees to radiofrequency/microwave radiation in excess of the permissible exposure limits specified in WAC 296-62-09005.

[Statutory Authority: RCW 49.17.010, .040, .050, and .060. 16-09-085 (Order 15-08), § 296-155-155, filed 04/19/16, effective 05/20/16. Statutory Authority: RCW 49.17.040 and 49.17.050. 86-03-074 (Order 86-14), § 296-155-155, filed 1/21/86; 85-01-022 (Order 84-24), § 296-155-155, filed 12/11/84; Order 74-26, § 296-155-155, filed 5/7/74, effective 6/6/74.]

WAC 296-155-160 Gases, vapors, fumes, dusts, and mists.

(1) You must avoid exposure of employees to inhalation, ingestion, skin absorption, or contact with any material or substance at a concentration above those specified in chapter 296-841 WAC.

(2) To achieve compliance with subsection (1) of this section, administrative or engineering controls must first be implemented whenever feasible. When such controls are not feasible to achieve full compliance, you must use protective equipment or other protective measures to keep the exposure of employees to air contaminants within the limits prescribed in WAC 296-62-07515 [WAC 296-841-20025]. Any equipment and technical measures used for this purpose must first be approved for each particular use by a competent industrial hygienist or other technically qualified person. Whenever respirators are used, you must comply with WAC 296-155-220.

(3) Whenever internal combustion equipment exhausts in enclosed spaces, you must make and record tests to ensure that employees are not exposed to unsafe concentrations of toxic gases or oxygen deficient atmospheres. See chapter 296-62 WAC, the general occupational health standards and chapter 296-841 WAC, Identifying and controlling respiratory hazards.

(4) Whenever any employee is exposed to asbestos, the provisions of the general occupational health standards, chapter 296-62 WAC apply.

(5) Subsections (1) and (2) of this section do not apply to the exposure of employees to formaldehyde. Whenever any employee is exposed to formaldehyde, the requirements of chapter 296-856 WAC apply.

[Statutory Authority: RCW 49.17.010, .040, .050, and .060. 16-09-085 (Order 15-08), § 296-155-160, filed 04/19/16, effective 05/20/16. Statutory Authority: RCW 49.17.010, .020, .040, .050, and .060. 07-03-163 (Order 06-30), § 296-155-160, filed 01/24/07, effective 04/01/07. Statutory Authority: RCW 49.17.010, .040, .050, and .060. 06-08-087 (Order 05-12), § 296-155-160, filed 04/04/06, effective 09/01/06. Statutory Authority: RCW 49.17.010, .040, .050, and .060. 05-03-093 (Order 04-41), § 296-155-160, filed 01/18/05, effective 03/01/05. Statutory Authority: Chapter 49.17 RCW. 94-15-096 (Order 94-07), § 296-155-160, filed 7/20/94, effective 9/20/94; 88-14-108 (Order 88-11), § 296-155-160, filed 7/6/88; 87-24-051 (Order 87-24), § 296-155-160, filed 11/30/87. Statutory Authority: RCW 49.17.050(2) and 49.17.040. 87-10-008 (Order 87-06), § 296-155-160, filed 4/27/87. Statutory Authority: RCW 49.17.040 and 49.17.050. 86-03-074 (Order 86-14), § 296-155-160, filed 1/21/86. Statutory Authority: RCW 49.17.040 and 49.17.050. 83-24-013 (Order 83-34), § 296-155-160, filed 11/30/83; Order 74-26, § 296-155-160, filed 5/7/74, effective 6/6/74.]

WAC 296-155-165 Lighting and illumination.

For lighting and illumination requirements, see WAC 296-800-210, Lighting.

[Statutory Authority: RCW 49.17.010, .040, .050, and .060. 04-24-089 (Order 04-02), § 296-155-165, filed 12/01/04, effective 01/01/05.]

WAC 296-155-170 Ventilation.

(1) **General**. Whenever hazardous substances such as dusts, fumes, mists, vapors, or gases exist or are produced in the course of construction work, their concentrations shall not exceed the limits specified in WAC 296-155-160(1). When ventilation is used as an engineering control method, the system shall be installed and operated according to the requirements of this section.

(2) **Local exhaust ventilation**. Local exhaust ventilation when used as described in (1) shall be designed to prevent dispersion into the air of dusts, fumes, mists, vapors, and gases in concentrations causing harmful exposure. Such exhaust systems shall be so designed that dusts, fumes, mists, vapors, or gases are not drawn through the work area of employees.

(3) **Design and operation**. Exhaust fans, jets, ducts, hoods, separators, and all necessary appurtenances, including refuse receptacles, shall be so designed, constructed, maintained and operated as to ensure the required protection by maintaining a volume and velocity of exhaust air sufficient to gather dusts, fumes, vapors, or gases from said equipment or process, and to convey them to suitable points of safe disposal, thereby preventing their dispersion in harmful quantities into the atmosphere where employees work.

(4) **Duration of operations.**

(a) The exhaust system shall be in operation continually during all operations which it is designed to serve. If the employee remains in the contaminated zone, the system shall continue to operate after the cessation of said operations, the length of time to depend upon the individual circumstances and effectiveness of the general ventilation system.

(b) Since dust capable of causing disability is, according to the best medical opinion, of microscopic size, tending to remain for hours in suspension in still air, it is essential that the exhaust system be continued in operation for a time after the work process or equipment served by the same shall have ceased, in order to ensure the removal of the harmful elements to the required extent.

> *Note: For the same reason, employees wearing respiratory equipment should not remove same immediately until a clear atmosphere has been established.*

(5) **Disposal of exhaust materials**. The air outlet from every dust separator, and the dusts, fumes, mists, vapors, or gases collected by an exhaust or ventilating system shall discharge to the outside atmosphere. Collecting systems which return air to work area may be used if concentrations which accumulate in the work area air do not result in harmful exposure to employees. Dust and refuse discharged from an exhaust system shall be disposed of in such a manner that it will not result in harmful exposure to employees.

[Order 74-26, § 296-155-170, filed 5/7/74, effective 6/6/74.]

WAC 296-155-173 Methylenedianiline.

[Statutory Authority: Chapter 49.17 RCW. 93-04-111 (Order 92-15), § 296-155-173, filed 2/3/93, effective 3/15/93.]

WAC 296-155-17301 Scope and application.

(1) This section applies to all construction work as defined in WAC 296-155-005, in which there is exposure to MDA, including but not limited to the following:

(a) Construction, alteration, repair, maintenance, or renovation of structures, substrates, or portions thereof, that contain MDA;

(b) Installation or the finishing of surfaces with products containing MDA;

(c) MDA spill/emergency cleanup at construction sites; and

(d) Transportation, disposal, storage, or containment of MDA or products containing MDA on the site or location at which construction activities are performed.

(2) Except as provided in subsection (7) of this section and WAC 296-155-17311(5), this standard does not apply to the processing, use, and handling of products containing MDA where initial monitoring indicates that the product is not capable of releasing MDA in excess of the action level under the expected conditions of processing, use, and handling which will cause the greatest possible release; and where no "dermal exposure to MDA" can occur.

(3) Except as provided in subsection (7) of this section, this standard does not apply to the processing, use, and handling of products containing MDA where objective data are reasonably relied upon which demonstrate the product is not capable of releasing MDA under the expected conditions of processing, use, and handling which will cause the greatest possible release; and where no "dermal exposure to MDA" can occur.

(4) Except as provided in subsection (7) of this section, this standard does not apply to the storage, transportation, distribution, or sale of MDA in intact containers sealed in such a manner as to contain the MDA dusts, vapors, or liquids, except for the provisions of WAC 296-62-054 and 296-155-17309.

(5) Except as provided in subsection (7) of this section, this standard does not apply to materials in any form which contain less than 0.1% MDA by weight or volume.

(6) Except as provided in subsection (7) of this section, this standard does not apply to "finished articles containing MDA."

(7) Where products containing MDA are exempted under subsections (2) and (6) of this section, you must maintain records of the initial monitoring results or objective data supporting that exemption and the basis for the employer's reliance on the data, as provided in the recordkeeping provision of WAC 296-155-17331.

[Statutory Authority: RCW 49.17.010, .040, .050, and .060. 16-09-085 (Order 15-08), § 296-155-17301, filed 04/19/16, effective 05/20/16. Statutory Authority: Chapter 49.17 RCW. 93-04-111 (Order 92-15), § 296-155-17301, filed 2/3/93, effective 3/15/93.]

WAC 296-155-17303 Definitions.

For the purpose of this standard, the following definitions apply:

Action level. A concentration of airborne MDA of 5 ppb as an 8-hour time-weighted average.

Authorized person. Any person specifically authorized by the employer whose duties require the person to enter a regulated area, or any person entering such an area as a designated representative of employees for the purpose of exercising the right to observe monitoring and measuring procedures under WAC 296-155-17333, or any other person authorized by the act or regulations issued under the act.

Container. Any barrel, bottle, can, cylinder, drum, reaction vessel, storage tank, commercial packaging, or the like, but does not include piping systems.

Decontamination area. An area outside of, but as near as practical to, the regulated area, consisting of an equipment storage area, wash area, and clean change area, which is used for the decontamination of workers, materials, and equipment contaminated with MDA.

Dermal exposure to MDA. Occurs where employees are engaged in the handling, application, or use of mixtures or materials containing MDA, with any of the following nonairborne forms of MDA:

(a) Liquid, powdered, granular, or flaked mixtures containing MDA in concentrations greater than 0.1% by weight or volume; and

(b) Materials other than "finished articles" containing MDA in concentrations greater than 0.1% by weight or volume.

Director. The director of the department of labor and industries.

Emergency. Any occurrence such as, but not limited to, equipment failure, rupture of containers, or failure of control equipment which results in an unexpected and potentially hazardous release of MDA.

Employee exposure. Exposure to MDA which would occur if the employee were not using respirators or protective work clothing and equipment.

Finished article containing MDA. A manufactured item:

(a) Which is formed to a specific shape or design during manufacture;

(b) Which has end use function(s) dependent in whole or part upon its shape or design during end use; and

(c) Where applicable, is an item which is fully cured by virtue of having been subjected to the conditions (temperature, time) necessary to complete the desired chemical reaction.

Historical monitoring data. Monitoring data for construction jobs that meet the following conditions:

(a) The data upon which judgments are based are scientifically sound and were collected using methods that are sufficiently accurate and precise;

(b) The processes and work practices that were in use when the historical monitoring data were obtained are essentially the same as those to be used during the job for which initial monitoring will not be performed;

(c) The characteristics of the MDA-containing material being handled when the historical monitoring data were obtained are the same as those on the job for which initial monitoring will not be performed;

(d) Environmental conditions prevailing when the historical monitoring data were obtained are the same as those on the job for which initial monitoring will not be performed; and

(e) Other data relevant to the operations, materials, processing, or employee exposures covered by the exception are substantially similar. The data must be scientifically sound, the characteristics of the MDA containing material must be similar, and the environmental conditions comparable.

4,4' methylenedianiline or MDA. The chemical 4,4'-diaminodiphenylmethane, Chemical Abstract Service Registry Number 101-77-9, in the form of a vapor, liquid, or solid. The definition also includes the salts of MDA.

Regulated areas. Areas where airborne concentrations of MDA exceed or can reasonably be expected to exceed, the permissible exposure limits, or where "dermal exposure to MDA" can occur.

STEL. Short-term exposure limit as determined by any 15-minute sample period.

[Statutory Authority: RCW 49.17.010, .040, .050, and .060. 16-09-085 (Order 15-08), § 296-155-17303, filed 04/19/16, effective 05/20/16. Statutory Authority: Chapter 49.17 RCW. 93-04-111 (Order 92-15), § 296-155-17303, filed 2/3/93, effective 3/15/93.]

WAC 296-155-17305 Permissible exposure limits.

You must ensure that no employee is exposed to an airborne concentration of MDA in excess of 10 parts per billion (10 ppb) as an 8-hour time-weighted average and a STEL of 100 parts per billion (100 ppb).

[Statutory Authority: RCW 49.17.010, .040, .050, and .060. 16-09-085 (Order 15-08), § 296-155-17305, filed 04/19/16, effective 05/20/16. Statutory Authority: Chapter 49.17 RCW. 93-04-111 (Order 92-15), § 296-155-17305, filed 2/3/93, effective 3/15/93.]

WAC 296-155-17307 Communication among employers.

On multi-employer worksites, an employer performing work involving the application of MDA or materials containing MDA for which establishment of one or more regulated areas must inform other employers on the site of the nature of the employer's work with MDA and of the existence of, and requirements pertaining to, regulated areas.

[Statutory Authority: RCW 49.17.010, .040, .050, and .060. 16-09-085 (Order 15-08), § 296-155-17307, filed 04/19/16, effective 05/20/16. Statutory Authority: Chapter 49.17 RCW. 93-04-111 (Order 92-15), § 296-155-17307, filed 2/3/93, effective 3/15/93.]

WAC 296-155-17309 Emergency situations.

(1) **Written plan.**

(a) You must develop a written plan for emergency situations for each construction operation where there is a possibility of an emergency. The plan must include procedures where the employer identifies emergency escape routes for her or his employees at each construction site before the construction operation begins. You must implement appropriate portions of the plan in the event of an emergency.

(b) The plan must specifically provide that employees engaged in correcting emergency conditions are equipped with the appropriate personal protective equipment and clothing as required in WAC 296-155-17317 and 296-155-17319 until the emergency is abated.

(c) The plan must specifically include provisions for alerting and evacuating affected employees as well as the applicable elements prescribed in WAC 296-24-567, "Employee emergency plans and fire prevention plans."

(2) **Alerting employees**. Where there is the possibility of employee exposure to MDA due to an emergency, you must develop means to promptly alert employees who have the potential to be directly exposed. You must immediately evacuate affected employees not engaged in correcting emergency conditions in the event that an emergency occurs. You must also develop means for alerting other employees who may be exposed as a result of the emergency.

[Statutory Authority: RCW 49.17.010, .040, .050, and .060. 16-09-085 (Order 15-08), § 296-155-17309, filed 04/19/16, effective 05/20/16. Statutory Authority: Chapter 49.17 RCW. 93-04-111 (Order 92-15), § 296-155-17309, filed 2/3/93, effective 3/15/93.]

WAC 296-155-17311 Exposure monitoring.

(1) **General.**

(a) You must make a determination of employee exposure from breathing zone air samples that are representative of each employee's exposure to airborne MDA over an 8-hour period. You must make a determination of employee exposure to the STEL from breathing zone air samples collected over a 15 minute sampling period.

(b) You must determine representative employee exposure on the basis of one or more samples representing full shift exposure for each shift for each job classification in each work area where exposure to MDA may occur.

(c) Where the employer can document that exposure levels are equivalent for similar operations in different work shifts, you must only be required to determine representative employee exposure for that operation during one shift.

(2) **Initial monitoring**. Each employer who has a workplace or work operation covered by this standard must perform initial monitoring to determine accurately the airborne concentrations of MDA to which employees may be exposed unless:

(a) The employer can demonstrate, on the basis of objective data, that the MDA-containing product or material being handled cannot cause exposures above the standard's action level, even under worst-case release conditions; or

(b) The employer has historical monitoring or other data demonstrating that exposures on a particular job will be below the action level.

(3) **Periodic monitoring and monitoring frequency.**

(a) If the monitoring required by subsection (2)(b) of this section reveals employee exposure at or above the action level, but at or below the PELs, you must repeat such monitoring for each such employee at least every 6 months.

(b) If the monitoring required by subsection (2)(b) of this section reveals employee exposure above the PELs, you must repeat such monitoring for each such employee at least every 3 months.

(c) Employers who are conducting MDA operations within a regulated area can forego periodic monitoring if the employees are all wearing supplied-air respirators while working in the regulated area.

(d) The employer may alter the monitoring schedule from every 3 months to every 6 months for any employee for whom two consecutive measurements taken at least 7 days apart indicate that the employee exposure has decreased to below the PELs but above the action level.

(4) **Termination of monitoring.**

(a) If the initial monitoring required by subsection (2)(b) of this section reveals employee exposure to be below the action level, the employer may discontinue the monitoring for that employee, except as otherwise required by subsection (5) of this section.

(b) If the periodic monitoring required by subsection (3) of this section reveals that employee exposures, as indicated by at least two consecutive measurements taken at least 7 days apart, are below the action level the employer may discontinue the monitoring for that employee, except as otherwise required by subsection (5) of this section.

(5) **Additional monitoring**. You must institute the exposure monitoring required under subsections (2)(b) and (c) of this section when there has been a change in production process, chemicals present, control equipment, personnel, or work practices which may result in new or additional exposures to MDA, or when the employer has any reason to suspect a change which may result in new or additional exposures.

(6) **Accuracy of monitoring**. Monitoring must be accurate, to a confidence level of 95%, to within plus or minus 25% for airborne concentrations of MDA.

(7) **Employee notification of monitoring results.**

(a) You must, as soon as possible but no later than 5 working days after the receipt of the results of any monitoring performed under this standard, notify each employee of these results, in writing, either individually or by posting of results in an appropriate location that is accessible to affected employees.

(b) The written notification required by subdivision (a) of this subsection must contain the corrective action being taken by the employer or any other protective measures which have been implemented to reduce the employee exposure to or below the PELs, wherever the PELs are exceeded.

(8) **Visual monitoring**. You must make routine inspections of employee hands, face, and forearms potentially exposed to MDA. Other potential dermal exposures reported by the employee must be referred to the appropriate medical personnel for observation. If the employer determines that the employee has been exposed to MDA you must:

(a) Determine the source of exposure;

(b) Implement protective measures to correct the hazard; and

(c) Maintain records of the corrective actions in accordance with WAC 296-155-17327.

[Statutory Authority: RCW 49.17.010, .040, .050, and .060. 16-09-085 (Order 15-08), § 296-155-17311, filed 04/19/16, effective 05/20/16. Statutory Authority: RCW 49.17.010, .040, .050, and .060. 06-05-027 (Order 05-45), § 296-155-17311, filed 02/07/06, effective 04/01/06. Statutory Authority: Chapter 49.17 RCW. 93-04-111 (Order 92-15), § 296-155-17311, filed 2/3/93, effective 3/15/93.]

WAC 296-155-17313 Regulated areas.

(1) **Establishment**.

(a) Airborne exposures. You must establish regulated areas where airborne concentrations of MDA exceed, or can reasonably be expected to exceed, the permissible exposure limits.

(b) Dermal exposures. Where employees are subject to "dermal exposure to MDA" you must establish those work areas as regulated areas.

(2) **Demarcation**. You must demarcate regulated areas from the rest of the workplace in a manner that minimizes the number of persons potentially exposed.

(3) **Access**. You must limit access to regulated areas to authorized persons.

(4) **Personal protective equipment and clothing**. You must supply each person entering a regulated area with the appropriate personal protective clothing and equipment in accordance with WAC 296-155-17317 and 296-155-17319 and require that they use it.

(5) **Prohibited activities**. You must ensure that employees do not eat, drink, smoke, chew tobacco or gum, or apply cosmetics in regulated areas.

[Statutory Authority: RCW 49.17.010, .040, .050, and .060. 16-09-085 (Order 15-08), § 296-155-17313, filed 04/19/16, effective 05/20/16. Statutory Authority: Chapter 49.17 RCW. 93-04-111 (Order 92-15), § 296-155-17313, filed 2/3/93, effective 3/15/93.]

WAC 296-155-17315 Methods of compliance.

(1) **Engineering controls and work practices and respirators.**

(a) You must use one or any combination of the following control methods to achieve compliance with the permissible exposure limits prescribed by WAC 296-155-17317.

(i) Local exhaust ventilation equipped with HEPA filter dust collection systems;

(ii) General ventilation systems;

(iii) Use of work practices; or

(iv) Other engineering controls such as isolation and enclosure that the director can show to be feasible.

(b) Wherever the feasible engineering controls and work practices which can be instituted are not sufficient to reduce employee exposure to or below the PELs, you must use them to reduce employee exposure to the lowest levels achievable by these controls and you must supplement them by the use of respiratory protective devices which comply with the requirements of WAC 296-155-17317.

(2) **Special provisions**. For workers engaged in spray application methods, respiratory protection must be used in addition to feasible engineering controls and work practices to reduce employee exposure to or below the PELs.

(3) **Prohibitions**. Compressed air must not be used to remove MDA unless the compressed air is used in conjunction with an enclosed ventilation system designed to capture the dust cloud created by the compressed air.

(4) **Employee rotation**. You must not use employee rotation as a means of compliance with the exposure limits prescribed in WAC 296-155-17305.

(5) **Compliance program.**

(a) You must establish and implement a written program to reduce employee exposure to or below the PELs by means of engineering and work practice controls, as required by subsection (1) of this section, and by use of respiratory protection where permitted under this section.

(b) Upon request you must furnish this written program for examination and copying to the director, affected employees, and designated employee representatives. You must review and, as necessary, update such plans at least once every 12 months to make certain they reflect the current status of the program.

[Statutory Authority: RCW 49.17.010, .040, .050, and .060. 16-09-085 (Order 15-08), § 296-155-17315, filed 04/19/16, effective 05/20/16. Statutory Authority: Chapter 49.17 RCW. 93-04-111 (Order 92-15), § 296-155-17315, filed 2/3/93, effective 3/15/93.]

WAC 296-155-17317 Respiratory protection

(1) **General**. You must provide each employee who uses a respirator required with this section with an appropriate respirator that complies with the requirements of this section. Respirators must be used during:

(a) Periods necessary to install or implement feasible engineering and work-practice controls.

(b) Work operations, such as maintenance and repair activities and spray application processes, for which engineering and work-practice controls are not feasible.

(c) Work operations for which feasible engineering and work-practice controls are not yet sufficient to reduce employee exposure to or below the PELs.

(d) Emergencies.

(2) **Respirator program**. You must develop, implement and maintain a respiratory protection program as required by chapter 296-842 WAC, Respirators, which covers each employee required by this chapter to use a respirator.

(3) **Respirator selection.**

(a) You must select and provide to employees appropriate respirators as specified in this section and WAC 296-842-13005 in the respirator rule.

(b) An employee who cannot use a negative-pressure respirator must be given the option of using a positive-pressure respirator, or a supplied-air respirator operated in the continuous-flow or pressure-demand mode.

(c) Provide HEPA filters or N-, R-, or P-100 filters for powered air-purifying respirators (PAPRs) and negative-pressure air-purifying respirators.

(d) Provide to employees, for escape, one of the following respirator options:

(i) A self-contained breathing apparatus with a full facepiece or hood, operated in the positive-pressure or continuous flow mode; or

(ii) A full facepiece air-purifying respirator.

[Statutory Authority: RCW 49.17.010, .040, .050, and .060. 16-09-085 (Order 15-08), § 296-155-17317, filed 04/19/16, effective 05/20/16. Statutory Authority: RCW 49.17.010, .040, .050, and .060. 09-15-145 (Order 09-04), § 296-155-17317, filed 07/21/09, effective 09/01/09. Statutory Authority: RCW 49.17.010, .040, .050, and .060. 07-05-072 (Order 06-39), § 296-155-17317, filed 02/20/07, effective 04/01/07. Statutory Authority: RCW 49.17.010, .040, .050, and .060. 05-03-093 (Order 04-41), § 296-155-17317, filed 01/18/05, effective 03/01/05. Statutory Authority: RCW 49.17.010, .040, .050. 99-10 (Order 98-10), § 296-155-17317, filed 05/04/99, effective 09/01/99. Statutory Authority: Chapter 49.17 RCW. 93-04-111 (Order 92-15), § 296-155-17317, filed 2/3/93, effective 3/15/93.]

WAC 296-155-17319 Protective work clothing and equipment.

(1) **Provision and use**. Where employees are subject to dermal exposure to MDA, where liquids containing MDA can be splashed into the eyes, or where airborne concentrations of MDA are in excess of the PEL, the employer must provide, at no cost to the employee, and ensure that the employee uses, appropriate protective work clothing and equipment which prevent contact with MDA such as, but not limited to:

(a) Aprons, coveralls, or other full-body work clothing;

(b) Gloves, head coverings, and foot coverings; and

(c) Face shields, chemical goggles; or

(d) Other appropriate protective equipment which comply with WAC 296-24-078.

(2) **Removal and storage.**

(a) You must ensure that, at the end of their work shift, employees remove MDA-contaminated protective work clothing and equipment that is not routinely removed throughout the day in change areas provided in accordance with the provisions in WAC 296-155-17321.

(b) You must ensure that, during their work shift, employees remove all other MDA-contaminated protective work clothing or equipment before leaving a regulated area.

(c) You must ensure that no employee takes MDA-contaminated work clothing or equipment out of the decontamination areas, except those employees authorized to do so for the purpose of laundering, maintenance, or disposal.

(d) You must place, store, and transport MDA-contaminated work clothing or equipment in sealed, impermeable bags, or other closed impermeable containers.

(e) You must label containers of MDA-contaminated protective work clothing or equipment which are to be taken out of decontamination areas or the workplace for cleaning, maintenance, or disposal, warning of the hazards of MDA.

(3) **Cleaning and replacement.**

(a) You must provide the employee with clean protective clothing and equipment. The employer must ensure that protective work clothing or equipment required by this section is cleaned, laundered, repaired, or replaced at intervals appropriate to maintain its effectiveness.

(b) You must prohibit the removal of MDA from protective work clothing or equipment by blowing, shaking, or any methods which allow MDA to reenter the workplace.

(c) You must ensure that laundering of MDA-contaminated clothing is done so as to prevent the release of MDA in the workplace.

(d) Any employer who gives MDA-contaminated clothing to another person for laundering must inform such person of the requirement to prevent the release of MDA.

(e) You must inform any person who launders or cleans protective clothing or equipment contaminated with MDA of the potentially harmful effects of exposure.

(4) **Visual examination.**

(a) You must ensure that employees' work clothing is examined periodically for rips or tears that may occur during performance of work.

(b) When rips or tears are detected, you must repair and replace the protective equipment or clothing immediately.

[Statutory Authority: RCW 49.17.010, .040, .050, and .060. 16-09-085 (Order 15-08), § 296-155-17319, filed 04/19/16, effective 05/20/16. Statutory Authority: Chapter 49.17 RCW. 93-04-111 (Order 92-15), § 296-155-17319, filed 2/3/93, effective 3/15/93.]

WAC 296-155-17321 Hygiene facilities and practices.

(1) **General.**

(a) You must provide decontamination areas for employees required to work in regulated areas or required by WAC 296-155-17319 to wear protective clothing. Exception: In lieu of the decontamination area requirement specified in this subsection, the employer may permit employees engaged in small scale, short duration operations, to clean their protective clothing or dispose of the protective clothing before such employees leave the area where the work was performed.

(b) Change areas. You must ensure that change areas are equipped with separate storage facilities for protective clothing and street clothing, in accordance with WAC 296-24-12011.

(c) Equipment area. You must supply the equipment area with impermeable, labeled bags and containers for the containment and disposal of contaminated protective clothing and equipment.

(2) **Shower area.**

(a) Where feasible, you must provide shower facilities which comply with WAC 296-24-12010 wherever the possibility of employee exposure to airborne levels of MDA in excess of the permissible exposure limit exists.

(b) Where dermal exposure to MDA occurs, you must ensure that materials spilled or deposited on the skin are removed as soon as possible by methods which do not facilitate the dermal absorption of MDA.

(3) **Lunch areas.**

(a) Whenever food or beverages are consumed at the worksite and employees are exposed to MDA you must provide clean lunch areas were MDA levels are below the action level and where no dermal exposure to MDA can occur.

(b) You must ensure that employees wash their hands and faces with soap and water prior to eating, drinking, smoking, or applying cosmetics.

(c) You must ensure that employees do not enter lunch facilities with contaminated protective work clothing or equipment.

[Statutory Authority: RCW 49.17.010, .040, .050, and .060. 16-09-085 (Order 15-08), § 296-155-17321, filed 04/19/16, effective 05/20/16. Statutory Authority: RCW 49.17.010, .040, .050. 01-11-038 (Order 99-36), § 296-155-17321, filed 05/09/01, effective 09/01/01. Statutory Authority: Chapter 49.17 RCW. 93-04-111 (Order 92-15), § 296-155-17321, filed 2/3/93, effective 3/15/93.]

WAC 296-155-17323 Communication of hazards.

(1) **Hazard communication - General.**

(a) Chemical manufacturers, importers, distributors and employers must comply with all requirements of the Hazard Communication Standard, WAC 296-901-140 for MDA.

(b) In classifying the hazards for MDA at least the following hazards are to be addressed: Cancer; liver effects; and skin sensitization.

(c) You must include MDA in the hazard communication program established to comply with the HCS, WAC 296-901-140. You must ensure that each employee has access to labels on containers of MDA and to safety data sheets, and is trained in accordance with the requirements of HCS and subsection (4) of this section.

(2) **Signs and labels.**

(a) Signs.

(i) You must post and maintain legible signs demarcating regulated areas and entrances or accessways to regulated areas that bear the following legend:

DANGER MDA MAY CAUSE CANCER CAUSES DAMAGE TO THE LIVER
RESPIRATORY PROTECTION AND PROTECTIVE CLOTHING
MAY BE REQUIRED IN THIS AREA
AUTHORIZED PERSONNEL ONLY

(ii) Prior to June 1, 2016, you may use the following legend in lieu of that specified in (a)(i) of this subsection:

DANGER MDA MAY CAUSE CANCER LIVER TOXIN
AUTHORIZED PERSONNEL ONLY
RESPIRATORS AND PROTECTIVE CLOTHING MAY BE REQUIRED TO BE WORN IN THIS AREA

(b) Labels. Prior to June 1, 2015, you may include the following information workplace labels in lieu of the labeling requirements in subsection (1) of this section:

(i) For pure MDA:

DANGER CONTAINS MDA MAY CAUSE CANCER LIVER TOXIN

(ii) For mixtures containing MDA:

DANGER CONTAINS MDA
CONTAINS MATERIALS WHICH MAY CAUSE CANCER LIVER TOXIN

(3) **Safety data sheets (SDS).**

In meeting the obligation to provide safety data sheets, you must make appropriate use of the information found in Appendices A and B to WAC 296-62-076.

(4) **Information and training.**

(a) You must provide employees with information and training on MDA, in accordance with WAC 296-901-14016, at the time of initial assignment and at least annually thereafter.

(b) In addition to the information required under WAC 296-901-140, you must:

(i) Provide an explanation of the contents of this section, including Appendices A and B of this section, and indicate to employees where a copy of the standard is available;

(ii) Describe the medical surveillance program required under WAC 296-155-17327, and explain the information contained in Appendix C of this standard; and

(iii) Describe the medical removal provision required under WAC 296-155-17327.

(5) **Access to training materials.**

(a) You must make readily available to all affected employees, without cost, all written materials relating to the employee training program, including a copy of this regulation.

(b) You must provide to the director, upon request, all information and training materials relating to the employee information and training program.

[Statutory Authority: RCW 49.17.010, .040, .050, and .060. 16-09-085 (Order 15-08), § 296-155-17323, filed 04/19/16, effective 05/20/16. Statutory Authority: RCW 49.17.010, .040, .050, and .060. 14-07-086 (Order 13-08), § 296-155-17323, filed 03/18/14, effective 05/01/14. Statutory Authority: RCW 49.17.010, .040, .050. 01-11-038 (Order 99-36), § 296-155-17323, filed 05/09/01, effective 09/01/01. Statutory Authority: Chapter 49.17 RCW. 93-04-111 (Order 92-15), § 296-155-17323, filed 2/3/93, effective 3/15/93.]

WAC 296-155-17325 Housekeeping.

(1) You must maintain all surfaces as free as practicable of visible accumulations of MDA.

(2) You must institute a program for detecting MDA leaks, spills, and discharges, including regular visual inspections of operations involving liquid or solid MDA.

(3) You must repair all leaks and clean up liquid or dust spills promptly.

(4) Surfaces contaminated with MDA may not be cleaned by the use of compressed air.

(5) Shoveling, dry sweeping, and other methods of dry clean-up of MDA may be used where HEPA-filtered vacuuming and/or wet cleaning are not feasible or practical.

(6) You must collect waste, scrap, debris, bags, containers, equipment, and clothing contaminated with MDA and dispose of it in a manner to prevent the reentry of MDA into the workplace.

[Statutory Authority: RCW 49.17.010, .040, .050, and .060. 16-09-085 (Order 15-08), § 296-155-17325, filed 04/19/16, effective 05/20/16. Statutory Authority: Chapter 49.17 RCW. 93-04-111 (Order 92-15), § 296-155-17325, filed 2/3/93, effective 3/15/93.]

WAC 296-155-17327 Medical surveillance.

(1) **General.**

(a) You must make available a medical surveillance program for employees exposed to MDA under the following circumstances:

(i) Employees exposed at or above the action level for 30 or more days per year;

(ii) Employees who are subject to dermal exposure to MDA for 15 or more days per year;

(iii) Employees who have been exposed in an emergency situation;

(iv) Employees whom the employer, based on results from compliance with WAC 296-155-17311(8) has reason to believe are being dermally exposed; and

(v) Employees who show signs or symptoms of MDA exposure.

(b) You must ensure that all medical examinations and procedures are performed by or under the supervision of a licensed physician at a reasonable time and place, and provided without cost to the employee.

(2) **Initial examinations.**

(a) Within 150 days of the effective date of this standard, or before the time of initial assignment, you must provide each employee covered by subsection (1)(a) of this section with a medical examination including the following elements:

A detailed history which includes:

(i) Past work exposure to MDA or any other toxic substances;

(ii) A history of drugs, alcohol, tobacco, and medication routinely taken (duration and quantity); and

(iii) A history of dermatitis, chemical skin sensitization, or previous hepatic disease.

(iv) A physical examination which includes all routine physical examination parameters, skin examination, and examination for signs of liver disease.

(v) Laboratory tests including:

(A) Liver function tests; and

(B) Urinalysis.

(vi) Additional tests as necessary in the opinion of the physician.

(b) No initial medical examination is required if adequate records show that the employee has been examined in accordance with the requirements of this section within the previous 6 months prior to the effective date of this standard or prior to the date of initial assignment.

(3) **Periodic examinations.**

(a) You must provide each employee covered by this section with a medical examination at least annually following the initial examination. These periodic examinations must include at least the following elements:

(i) A brief history regarding any new exposure to potential liver toxins, changes in drug, tobacco, and alcohol intake, and the appearance of physical signs relating to the liver and the skin;

(ii) The appropriate tests and examinations including liver function tests and skin examinations; and

(iii) Appropriate additional tests or examinations as deemed necessary by the physician.

(b) If in the physician's opinion the results of liver function tests indicate an abnormality, the employee must be removed from further MDA exposure in accordance with WAC 296-155-17329. Repeat liver function tests must be conducted on advice of the physician.

(4) **Emergency examinations**. If the employer determines that the employee has been exposed to a potentially hazardous amount of MDA in an emergency situation under WAC 296-155-17309, you must provide medical examinations in accordance with subsection (3)(a) and (b). If the results of liver function testing indicate an abnormality, the employee must be removed in accordance with WAC 296-155-17329. Repeat liver function tests must be conducted on the advice of the physician. If the results of the tests are normal, tests must be repeated 2 to 3 weeks from the initial testing. If the results of the second set of tests are normal and on the advice of the physician, no additional testing is required.

(5) **Additional examinations**. Where the employee develops signs and symptoms associated with exposure to MDA, you must provide the employee with an additional medical examination including liver function tests. Repeat liver function tests must be conducted on the advice of the physician. If the results of the tests are normal, tests must be repeated 2 to 3 weeks from the initial testing. If the results of the second set of tests are normal and on the advice of the physician, no additional testing is required.

(6) **Multiple physician review mechanism.**

(a) If the employer selects the initial physician who conducts any medical examination or consultation provided to an employee under this section, and the employee has signs or symptoms of occupational exposure to MDA (which could include an abnormal liver function test), and the employee disagrees with the opinion of the examining physician, and this opinion could affect the employee's job status, the employee may designate an appropriate and mutually acceptable second physician:

(i) To review any findings, determinations, or recommendations of the initial physician; and

(ii) To conduct such examinations, consultations, and laboratory tests as the second physician deems necessary to facilitate this review.

(b) You must promptly notify an employee of the right to seek a second medical opinion after each occasion that an initial physician conducts a medical examination or consultation pursuant to this section. The employer may condition its participation in, and payment for, the multiple physician review mechanism upon the employee doing the following within 15 days after receipt of the foregoing notification, or receipt of the initial physician's written opinion, whichever is later:

(i) The employee informing the employer that he or she intends to seek a second medical opinion; and

(ii) The employee initiating steps to make an appointment with a second physician.

(c) If the findings, determinations, or recommendations of the second physician differ from those of the initial physician, then the employer and the employee must ensure that efforts are made for the two physicians to resolve any disagreement.

(d) If the two physicians have been unable to quickly resolve their disagreement, then the employer and the employee through their respective physicians must designate a third physician:

(i) To review any findings, determinations, or recommendations of the prior physicians; and

(ii) To conduct such examinations, consultations, laboratory tests, and discussions with the prior physicians as the third physician deems necessary to resolve the disagreement of the prior physicians.

(e) You must act consistent with the findings, determinations, and recommendations of the second physician, unless the employer and the employee reach a mutually acceptable agreement.

(f) Information provided to the examining physician.

(i) You must provide the following information to the examining physician:

(A) A copy of this regulation and its appendices;

(B) A description of the affected employee's duties as they relate to the employee's potential exposure to MDA;

(C) The employee's current actual or representative MDA exposure level;

(D) A description of any personal protective equipment used or to be used; and

(E) Information from previous employment related medical examinations of the affected employee.

(ii) You must provide the foregoing information to a second physician under this section upon request either by the second physician, or by the employee.

(g) Physician's written opinion.

(i) For each examination under this section, you must obtain, and provide the employee with a copy of, the examining physician's written opinion within 15 days of its receipt. The written opinion must include the following:

(A) The occupationally pertinent results of the medical examination and tests;

(B) The physician's opinion concerning whether the employee has any detected medical conditions which would place the employee at increased risk of material impairment of health from exposure to MDA;

(C) The physician's recommended limitations upon the employee's exposure to MDA or upon the employee's use of protective clothing or equipment and respirators; and

(D) A statement that the employee has been informed by the physician of the results of the medical examination and any medical conditions resulting from MDA exposure which require further explanation or treatment.

(ii) The written opinion obtained by the employer must not reveal specific findings or diagnoses unrelated to occupational exposures.

[Statutory Authority: RCW 49.17.010, .040, .050, and .060. 16-09-085 (Order 15-08), § 296-155-17327, filed 04/19/16, effective 05/20/16. Statutory Authority: Chapter 49.17 RCW. 93-04-111 (Order 92-15), § 296-155-17327, filed 2/3/93, effective 3/15/93.]

WAC 296-155-17329 Medical removal.

(1) **Temporary medical removal of an employee.**

(a) Temporary removal resulting from occupational exposure. You must remove the employee from work environments in which exposure to MDA is at or above the action level or where dermal exposure to MDA may occur, following an initial examination (WAC 296-155-17327(2)), periodic examinations (WAC 296-155-17327(3)), an emergency situation (WAC 296-155-17327(4)), or an additional examination (WAC 296-155-17327(5)) in the following circumstances:

(i) When the employee exhibits signs and/or symptoms indicative of acute exposure to MDA; or

(ii) When the examining physician determines that an employee's abnormal liver function tests are not associated with MDA exposure but that the abnormalities may be exacerbated as a result of occupational exposure to MDA.

(b) Temporary removal due to a final medical determination.

(i) You must remove an employee from work having an exposure to MDA at or above the action level or where the potential for dermal exposure exists on each occasion that a final medical determination results in a medical finding, determination, or opinion that the employee has a detected medical condition which places the employee at increased risk of material impairment to health from exposure to MDA.

(ii) For the purposes of this section, the phrase “final medical determination” means the outcome of the physician review mechanism used pursuant to the medical surveillance provisions of this section.

(iii) Where a final medical determination results in any recommended special protective measures for an employee, or limitations on an employee's exposure to MDA, you must implement and act consistent with the recommendation.

(2) **Return of the employee to former job status.**

(a) You must return an employee to her or his former job status:

(i) When the employee no longer shows signs or symptoms of exposure to MDA, or upon the advice of the physician.

(ii) When a subsequent final medical determination results in a medical finding, determination, or opinion that the employee no longer has a detected medical condition which places the employee at increased risk of material impairment to health from exposure to MDA.

(b) For the purposes of this section, the requirement that an employer return an employee to his or her former job status is not intended to expand upon or restrict any rights an employee has or would have had, absent temporary medical removal, to a specific job classification or position under the terms of a collective bargaining agreement.

(3) **Removal of other employee special protective measure or limitations**. You must remove any limitations placed on an employee or end any special protective measures provided to an employee pursuant to a final medical determination when a subsequent final medical determination indicates that the limitations or special protective measures are no longer necessary.

(4) **Employer options pending a final medical determination**. Where the physician review mechanism used pursuant to the medical surveillance provisions of this section has not yet resulted in a final medical determination with respect to an employee, you must act as follows:

(a) Removal. The employer may remove the employee from exposure to MDA, provide special protective measures to the employee, or place limitations upon the employee, consistent with the medical findings, determinations, or recommendations of the physician who has reviewed the employee's health status.

(b) Return. The employer may return the employee to her or his former job status, and end any special protective measures provided to the employee, consistent with the medical findings, determinations, or recommendations of any of the physicians who have reviewed the employee's health status, with two exceptions:

(i) If the initial removal, special protection, or limitation of the employee resulted from a final medical determination which differed from the findings, determinations, or recommendations of the initial physician; or

(ii) The employee has been on removal status for the preceding 6 months as a result of exposure to MDA, then the employer must await a final medical determination.

(5) **Medical removal protection benefits.**

(a) Provisions of medical removal protection benefits. You must provide to an employee up to 6 months of medical removal protection benefits on each occasion that an employee is removed from exposure to MDA or otherwise limited pursuant to this section.

(b) Definition of medical removal protection benefits. For the purposes of this section, the requirement that an employer provide medical removal protection benefits means that you must maintain the earnings, seniority, and other employment rights and benefits of an employee as though the employee had not been removed from normal exposure to MDA or otherwise limited.

(c) Follow-up medical surveillance during the period of employee removal or limitations. During the period of time that an employee is removed from normal exposure to MDA or otherwise limited, the employer may condition the provision of medical removal protection benefits upon the employee's participation in follow-up medical surveillance made available pursuant to this section.

(d) Workers' compensation claims. If a removed employee files a claim for workers' compensation payments for an MDA-related disability, then you must continue to provide medical removal protection benefits pending disposition of the claim. To the extent that an award is made to the employee for earnings lost during the period of removal, the employer's medical removal protection obligation must be reduced by such amount. You must receive no credit for workers' compensation payments received by the employee for treatment-related expenses.

(e) Other credits. The employer's obligation to provide medical removal protection benefits to a removed employee must be reduced to the extent that the employee receives compensation for earnings lost during the period of removal either from a publicly or employer-funded compensation program, or receives income from employment with any employer made possible by virtue of the employee's removal.

(f) Employees who do not recover within the 6 months of removal. You must take the following measures with respect to any employee removed from exposure to MDA:

(i) You must make available to the employee a medical examination pursuant to this section to obtain a final medical determination with respect to the employee;

(ii) You must ensure that the final medical determination obtained indicates whether or not the employee may be returned to their former job status, and, if not, what steps should be taken to protect the employee's health;

(iii) Where the final medical determination has not yet been obtained, or once obtained indicates that the employee may not yet be returned to her or his former job status, you must continue to provide medical removal protection benefits to the employee until either the employee is returned to former job status, or a final medical determination is made that the employee is incapable of ever safely returning to her or his former job status; and

(iv) Where the employer acts pursuant to a final medical determination which permits the return of the employee to her or his former job status despite what would otherwise be an unacceptable liver function test, later questions concerning removing the employee again must be decided by a final medical determination. The employer need not automatically remove such an employee pursuant to the MDA removal criteria provided by this section.

(6) **Voluntary removal or restriction of an employee**. Where an employer, although not required by this section to do so, removes an employee from exposure to MDA or otherwise places limitations on an employee due to the effects of MDA exposure on the employee's medical condition, you must provide medical removal protection benefits to the employee equal to that required by subsection (5) of this section.

[Statutory Authority: RCW 49.17.010, .040, .050, and .060. 16-09-085 (Order 15-08), § 296-155-17329, filed 04/19/16, effective 05/20/16. Statutory Authority: Chapter 49.17 RCW. 93-04-111 (Order 92-15), § 296-155-17329, filed 2/3/93, effective 3/15/93.]

WAC 296-155-17331 Recordkeeping.

(1) **Objective data for exempted operations.**

(a) Where the employer has relied on objective data that demonstrate that products made from or containing MDA are not capable of releasing MDA or do not present a dermal exposure problem under the expected conditions of processing, use, or handling to exempt such operations from the initial monitoring requirements under WAC 296-155-17311(2), you must establish and maintain an accurate record of objective data reasonably relied upon in support of the exemption.

(b) The record must include at least the following information:

(i) The product qualifying for exemption;

(ii) The source of the objective data;

(iii) The testing protocol, results of testing, and/or analysis of the material for the release of MDA;

(iv) A description of the operation exempted and how the data support the exemption; and

(v) Other data relevant to the operations, materials, processing, or employee exposures covered by the exemption.

(c) You must maintain this record for the duration of the employer's reliance upon such objective data.

(2) **Historical monitoring data.**

(a) Where the employer has relied on historical monitoring data that demonstrate that exposures on a particular job will be below the action level to exempt such operations from the initial monitoring requirements under WAC 296-155-17311(2), you must establish and maintain an accurate record of historical monitoring data reasonably relied upon in support of the exception.

(b) The record must include information that reflect the following conditions:

(i) The data upon which judgments are based are scientifically sound and were collected using methods that are sufficiently accurate and precise;

(ii) The processes and work practices that were in use when the historical monitoring data were obtained are essentially the same as those to be used during the job for which initial monitoring will not be performed;

(iii) The characteristics of the MDA-containing material being handled when the historical monitoring data were obtained are the same as those on the job for which initial monitoring will not be performed;

(iv) Environmental conditions prevailing when the historical monitoring data were obtained are the same as those on the job for which initial monitoring will not be performed; and

(v) Other data relevant to the operations, materials, processing, or employee exposures covered by the exception.

(c) You must maintain this record for the duration of the employer's reliance upon such historical monitoring data.

(3) You may utilize the services of competent organizations such as industry trade associations and employee associations to maintain the records required by this section.

(4) **Exposure measurements.**

(a) You must keep an accurate record of all measurements taken to monitor employee exposure to MDA.

(b) This record must include at least the following information:

(i) The date of measurement;

(ii) The operation involving exposure to MDA;

(iii) Sampling and analytical methods used and evidence of their accuracy;

(iv) Number, duration, and results of samples taken;

(v) Type of protective devices worn, if any; and

(vi) Name, Social Security number, and exposure of the employees whose exposures are represented.

(c) You must maintain this record for at least 30 years in accordance with chapter 296-62 WAC, Part B.

(5) **Medical surveillance.**

(a) You must establish and maintain an accurate record for each employee subject to medical surveillance by WAC 296-155-17327 in accordance with chapter 296-62 WAC, Part B.

(b) The record must include at least the following information:

(i) The name and Social Security number of the employee;

(ii) A copy of the employee's medical examination results, including the medical history, questionnaire responses, results of any tests, and physician's recommendations;

(iii) Physician's written opinions;

(iv) Any employee medical complaints related to exposure to MDA; and

(v) A copy of the information provided to the physician as required by WAC 296-155-17327.

(c) You must ensure that this record is maintained for the duration of employment plus 30 years in accordance with chapter 296-62 WAC, Part B.

(d) A copy of the employee's medical removal and return to work status.

(6) **Training records**. You must maintain all employee training records for one year beyond the last date of employment.

(7) **Availability.**

(a) You must, upon written request, make all records required to be maintained by this section available to the assistant secretary and the director for examination and copying.

(b) You must, upon request, make any exposure records required by WAC 296-155-17311 and 296-155-17327 available for examination and copying to affected employees, former employees, designated representatives, and the director, in accordance with chapter 296-802 WAC.

(c) You must, upon request, make employee medical records required by WAC 296-155-17327 and this section available for examination and copying to the subject employee, anyone having the specific written consent of the subject employee, and the director in accordance with chapter 296-802 WAC.

(8) **Transfer of records.**

(a) You must comply with the requirements concerning transfer of records set forth in chapter 296-802 WAC.

(b) Whenever the employer ceases to do business and there is no successor employer to receive and retain the records for the prescribed period, you must notify the director at least 90 days prior to disposal and, upon request, transmit them to the director.

[Statutory Authority: RCW 49.17.010, .040, .050, and .060. 16-09-085 (Order 15-08), § 296-155-17331, filed 04/19/16, effective 05/20/16. Statutory Authority: RCW 49.17.010, .040, .050, and .060. 04-10-046 (Order 03-04), § 296-155-17331, filed 04/27/04, effective 08/01/04. Statutory Authority: Chapter 49.17 RCW. 93-04-111 (Order 92-15), § 296-155-17331, filed 2/3/93, effective 3/15/93.]

WAC 296-155-17333 Observation of monitoring.

(1) **Employee observation**. You must provide affected employees, or their designated representatives, an opportunity to observe the measuring or monitoring of employee exposure to MDA conducted pursuant to WAC 296-155-17311.

(2) **Observation procedures**. When observation of the measuring or monitoring of employee exposure to MDA requires entry into areas where the use of protective clothing and equipment or respirators is required, you must provide the observer with personal protective clothing and equipment or respirators required to be worn by employees working in the area, assure the use of such clothing and equipment or respirators, and require the observer to comply with all other applicable safety and health procedures.

[Statutory Authority: RCW 49.17.010, .040, .050, and .060. 16-09-085 (Order 15-08), § 296-155-17333, filed 04/19/16, effective 05/20/16. Statutory Authority: Chapter 49.17 RCW. 93-04-111 (Order 92-15), § 296-155-17333, filed 2/3/93, effective 3/15/93.]

WAC 296-155-17337 Appendices.

The information contained in Appendices A, B, C, and D of this standard is not intended by itself, to create any additional obligations not otherwise imposed by this standard nor detract from any existing obligation.

[Statutory Authority: RCW 49.17.010, .040, .050. 99-10 (Order 98-10), § 296-155-17337, filed 05/04/99, effective 09/01/99. Statutory Authority: Chapter 49.17 RCW. 93-04-111 (Order 92-15), § 296-155-17337, filed 2/3/93, effective 3/15/93.]

WAC 296-155-17339 Startup dates.

Compliance with all obligations of this standard commence March 3, 1993, except as follows:

(1) Initial monitoring under WAC 296-155-17311(2) must be completed as soon as possible but no later than June 3, 1993.

(2) Medical examinations under WAC 296-155-17327, must be completed as soon as possible but no later than August 14, 1993.

(3) Emergency plans required by WAC 296-155-17309 must be provided and available for inspection and copying as soon as possible but no later than July 13, 1993.

(4) Initial training and education must be completed as soon as possible but no later than July 13, 1993.

(5) Decontamination and lunch areas under WAC 296-155-17321 must be in operation as soon as possible but no later than March 3, 1993.

(6) Respiratory protection required by WAC 296-155-17317 must be provided as soon as possible but no later than July 13, 1993.

(7) Written compliance plans required by WAC 296-155-17315(5) must be completed and available for inspection and copying as soon as possible but no later than July 13, 1993.

(8) DOSH must enforce the permissible exposure limits in WAC 296-155-17305 no earlier than July 13, 1993.

(9) Engineering controls needed to achieve the PELs must be in place March 3, 1993.

(10) Personal protective clothing required by WAC 296-155-17317 must be available July 13, 1993.

[Statutory Authority: RCW 49.17.010, .040, .050, and .060. 16-09-085 (Order 15-08), § 296-155-17339, filed 04/19/16, effective 05/20/16. Statutory Authority: Chapter 49.17 RCW. 93-04-111 (Order 92-15), § 296-155-17339, filed 2/3/93, effective 3/15/93.]

WAC 296-155-17341 Appendix A to WAC 296-155-173--Substance data sheet, for 4-4'-methylenedianiline.

(1) **Substance identification.**

(a) Substance: Methylenedianiline (MDA).

(b) Permissible exposure:

(i) Airborne: 10 parts per billion parts of air (10 ppb), time-weighted average (TWA) for an 8-hour workday and an action level of 5 parts per billion parts of air (5 ppb).

(ii) Dermal: Eye contact and skin contact with MDA are not permitted.

(c) Appearance and odor: White to tan solid; amine odor.

(2) **Health hazard data.**

(a) Ways in which MDA affects your health. MDA can affect your health if you inhale it or if it comes in contact with your skin or eyes. MDA is also harmful if you happen to swallow it. Do not get MDA in eyes, on skin, or on clothing.

(b) Effects of overexposure.

(i) Short-term (acute) overexposure: Overexposure to MDA may produce fever, chills, loss of appetite, vomiting, jaundice. Contact may irritate skin, eyes, and mucous membranes. Sensitization may occur.

(ii) Long-term (chronic) exposure. Repeated or prolonged exposure to MDA, even at relatively low concentrations, may cause cancer. In addition, damage to the liver, kidneys, blood, and spleen may occur with long-term exposure.

(iii) Reporting signs and symptoms: You should inform your employer if you develop any signs or symptoms which you suspect are caused by exposure to MDA including yellow staining of the skin.

(3) **Protective clothing and equipment.**

(a) Respirators. Respirators are required for those operations in which engineering controls or work practice controls are not adequate or feasible to reduce exposure to the permissible limit. If respirators are worn, they must be certified by the National Institute for Occupational Safety and Health (NIOSH) under 42 CFR part 84, and cartridges or canisters must be replaced as necessary to maintain the effectiveness of the respirator. If you experience difficulty breathing while wearing a respirator, you may request a positive-pressure respirator from your employer. You must be thoroughly trained to use the assigned respirator, and the training will be provided by your employer. MDA does not have a detectable odor except at levels well above the permissible exposure limits. Do not depend on odor to warn you when a respirator canister is exhausted. If you can smell MDA while wearing a respirator, proceed immediately to fresh air. If you experience difficulty breathing while wearing a respirator, tell your employer.

(b) Protective clothing. You may be required to wear coveralls, aprons, gloves, face shields, or other appropriate protective clothing to prevent skin contact with MDA. Where protective clothing is required, your employer is required to provide clean garments to you, as necessary, to assure that the clothing protects you adequately. Replace or repair impervious clothing that has developed leaks. MDA should never be allowed to remain on the skin. Clothing and shoes which aren't impervious to MDA should not be allowed to become contaminated with MDA, and if they do, the clothing and shoes should be promptly removed and decontaminated. The clothing should be laundered to remove MDA or discarded. Once MDA penetrates shoes or other leather articles, they should not be worn again.

(c) Eye protection. You must wear splashproof safety goggles in areas where liquid MDA may contact your eyes. Contact lenses should not be worn in areas where eye contact with MDA can occur. In addition, you must wear a face shield if your face could be splashed with MDA liquid.

(4) **Emergency and first aid procedures.**

(a) Eye and face exposure. If MDA is splashed into the eyes, wash the eyes for at least 15 minutes. See a doctor as soon as possible.

(b) Skin exposure. If MDA is spilled on your clothing or skin, remove the contaminated clothing and wash the exposed skin with large amounts of soap and water immediately. Wash contaminated clothing before you wear it again.

(c) Breathing. If you or any other person breathes in large amounts of MDA, get the exposed person to fresh air at once. Apply artificial respiration if breathing has stopped. Call for medical assistance or a doctor as soon as possible. Never enter any vessel or confined space where the MDA concentration might be high without proper safety equipment and at least one other person present who will stay outside. A life line should be used.

(d) Swallowing. If MDA has been swallowed and the patient is conscious, do not induce vomiting. Call for medical assistance or a doctor immediately.

(5) **Medical requirements**. If you are exposed to MDA at a concentration at or above the action level for more than 30 days per year, or exposed to liquid mixtures more than 15 days per year, your employer is required to provide a medical examination, including a medical history and laboratory tests, within 60 days of the effective date of this standard and annually thereafter. These tests must be provided without cost to you. In addition, if you are accidentally exposed to MDA (either by ingestion, inhalation, or skin/eye contact) under conditions known or suspected to constitute toxic exposure to MDA, your employer is required to make special examinations and tests available to you.

(6) **Observation of monitoring**. Your employer is required to perform measurements that are representative of your exposure to MDA and you or your designated representative are entitled to observe the monitoring procedure. You are entitled to observe the steps taken in the measurement procedure and to record the results obtained. When the monitoring procedure is taking place in an area where respirators or personal protective clothing and equipment are required to be worn; you and your representative must also be provided with, and must wear, the protective clothing and equipment.

(7) **Access to records**. You or your representative are entitled to see the records of measurements of your exposure to MDA upon written request to your employer. Your medical examination records can be furnished to your physician or designated representative upon request by you to your employer.

(8) **Precautions for safe use, handling, and storage.**

(a) Material is combustible. Avoid strong acids and their anhydrides. Avoid strong oxidants. Consult supervisor for disposal requirements.

(b) Emergency clean-up. Wear self-contained breathing apparatus and fully clothe the body in the appropriate personal protective clothing and equipment.

[Statutory Authority: RCW 49.17.010, .040, .050, and .060. 16-09-085 (Order 15-08), § 296-155-17341, filed 04/19/16, effective 05/20/16. Statutory Authority: RCW 49.17.010, .040, .050. 99-10 (Order 98-10), § 296-155-17341, filed 05/04/99, effective 09/01/99. Statutory Authority: Chapter 49.17 RCW. 93-04-111 (Order 92-15), § 296-155-17341, filed 2/3/93, effective 3/15/93.]

WAC 296-155-17343 Appendix B to WAC 296-155-173--Substance technical guidelines, MDA.

(1) **Identification.**

(a) Substance identification.

(i) Synonyms: CAS No. 101-77-9. 4,4'-methylenedianiline; 4,4'-methylenebisaniline; methylenedianiline; dianilinomethane.

(ii) Formula: $C_{13}H_{14}N_2$.

(b) Physical data.

(2) **Appearance and odor: White to tan solid; amine odor.**

(a) Molecular weight: 198.26.

(b) Boiling point: 398-399 degrees C. at 760 mm Hg.

(c) Melting point: 88-93 degrees C. (190-100 degrees F.).

(d) Vapor pressure: 9 mm Hg at 232 degrees C.

(e) Evaporation rate (n-butyl acetate=1): Negligible.

(f) Vapor density (Air=1): Not applicable.

(g) Volatile fraction by weight: Negligible.

(h) Specific gravity (Water=1): Slight.

(i) Heat of combustion: -8.40 kcal/g.

(j) Solubility in water: Slightly soluble in cold water, very soluble in alcohol, benzene, ether, and many organic solvents.

(3) **Fire, explosion, and reactivity hazard data.**

(a) Flash point: 190 degrees C. (374 degrees F.) Setaflash closed cup.

(b) Flash point: 226 degrees C. (439 degrees F.) Cleveland open cup.

(c) Extinguishing media: Water spray; dry chemical; carbon dioxide.

(d) Special firefighting procedures: Wear self-contained breathing apparatus and protective clothing to prevent contact with skin and eyes.

(e) Unusual fire and explosion hazards: Fire or excessive heat may cause production of hazardous decomposition products.

(4) **Reactivity data.**

(a) Stability: Stable.

(b) Incompatibility: Strong oxidizers.

(c) Hazardous decomposition products: As with any other organic material, combustion may produce carbon monoxide. Oxides of nitrogen may also be present.

(d) Hazardous polymerization: Will not occur.

(5) **Spill and leak procedures.**

(a) Sweep material onto paper and place in fiber carton.

(b) Package appropriately for safe feed to an incinerator or dissolve in compatible waste solvents prior to incineration.

(c) Dispose of in an approved incinerator equipped with afterburner and scrubber or contract with licensed chemical waste disposal service.

(d) Discharge treatment or disposal may be subject to federal, state, or local laws.

(e) Wear appropriate personal protective equipment.

(6) **Special storage and handling precautions.**

(a) High exposure to MDA can occur when transferring the substance from one container to another. Such operations should be well ventilated and good work practices must be established to avoid spills.

(b) Pure MDA is a solid with a low vapor pressure. Grinding or heating operations increase the potential for exposure.

(c) Store away from oxidizing materials.

(d) Employers must advise employees of all areas and operations where exposure to MDA could occur.

(7) **Housekeeping and hygiene facilities.**

(a) The workplace should be kept clean, orderly, and in a sanitary condition. The employer should institute a leak and spill detection program for operations involving MDA in order to detect sources of fugitive MDA emissions.

(b) Adequate washing facilities with hot and cold water are to be provided and maintained in a sanitary condition. Suitable cleansing agents should also be provided to assure the effective removal of MDA from the skin.

(8) **Common operations**. Common operations in which exposure to MDA is likely to occur include the following: Manufacture of MDA; manufacture of methylene diisocyanate; curing agent for epoxy resin structures; wire coating operations; and filament winding.

[Statutory Authority: RCW 49.17.010, .040, .050, and .060. 16-09-085 (Order 15-08), § 296-155-17343, filed 04/19/16, effective 05/20/16. Statutory Authority: Chapter 49.17 RCW. 93-04-111 (Order 92-15), § 296-155-17343, filed 2/3/93, effective 3/15/93.]

WAC 296-155-17345 Appendix C to WAC 296-155-173--Medical surveillance guidelines for MDA.

(1) **Route of entry**. Inhalation; skin absorption; ingestion. MDA can be inhaled, absorbed through the skin, or ingested.

(2) **Toxicology**. MDA is a suspect carcinogen in humans. There are several reports of liver disease in humans and animals resulting from acute exposure to MDA. A well-documented case of an acute cardiomyopathy secondary to exposure to MDA is on record. Numerous human cases of hepatitis secondary to MDA are known. Upon direct contact MDA may also cause damage to the eyes. Dermatitis and skin sensitization have been observed. Almost all forms of acute environmental hepatic injury in humans involve the hepatic parenchyma and produce hepatocellular jaundice. This agent produces intrahepatic cholestasis. The clinical picture consists of cholestatic jaundice, preceded or accompanied by abdominal pain, fever, and chills. Onset in about 60% of all observed cases is abrupt with severe abdominal pain. In about 30% of observed cases, the illness presented and evolved more slowly and less dramatically, with only slight abdominal pain. In about 10% of the cases only jaundice was evident. The cholestatic nature of the jaundice is evident in the prominence of itching, the histologic predominance of bile stasis, and portal inflammatory infiltration, accompanied by only slight parenchymal injury in most cases, and by the moderately elevated transaminase values. Acute, high doses, however, have been known to cause hepatocellular damage resulting in elevated SGPT, SGOT, alkaline phosphatase, and bilirubin. Absorption through the skin is rapid. MDA is metabolized and excreted over a 48-hour period. Direct contact may be irritating to the skin, causing dermatitis. Also MDA which is deposited on the skin is not thoroughly removed through washing. MDA may cause bladder cancer in humans. Animal data supporting this assumption is not available nor is conclusive human data. However, human data collected on workers at a helicopter manufacturing facility where MDA is used suggests a higher incidence of bladder cancer among exposed workers.

(3) **Signs and symptoms**. Skin may become yellow from contact with MDA. Repeated or prolonged contact with MDA may result in recurring dermatitis (red-itchy, cracked skin) and eye irritation. Inhalation, ingestion, or absorption through the skin at high concentrations may result in hepatitis, causing symptoms such as fever and chills, nausea and vomiting, dark urine, anorexia, rash, right upper quadrant pain, and jaundice. Corneal burns may occur when MDA is splashed in the eyes.

(4) **Treatment of acute toxic effects/emergency situation**. If MDA gets into the eyes, immediately wash eyes with large amounts of water. If MDA is splashed on the skin, immediately wash contaminated skin with mild soap or detergent. Employee should be removed from exposure and given proper medical treatment. Medical tests required under the emergency section of the medical surveillance (WAC 296-155-17327(4)) must be conducted. If the chemical is swallowed do not induce vomiting but remove by gastric lavage.

[Statutory Authority: Chapter 49.17 RCW. 93-04-111 (Order 92-15), § 296-155-17345, filed 2/3/93, effective 3/15/93.]

WAC 296-155-17347 Appendix D to WAC 296-155-173--Sampling and analytical methods for MDA monitoring and measurement procedures.

Measurements taken for the purpose of determining employee exposure to MDA are best taken so that the representative average 8-hour exposure may be determined from a single 8-hour sample or two 4-hour samples. Short-time interval samples (or grab samples) may also be used to determine average exposure level if a minimum of 5 measurements are taken in a random manner over the 8-hour work shift. Random sampling means that any portion of the work shift has the same chance of being sampled as any other. The arithmetic average of all such random samples taken on one work shift is an estimate of an employee's average level of exposure for that work shift. Air samples should be taken in the employee's breathing zone (air that would most nearly represent that inhaled by the employee). There are a number of methods available for monitoring employee exposures to MDA. The method OSHA currently uses is included below. The employer however has the obligation of selecting any monitoring method which meets the accuracy and precision requirements of the standard under her or his unique field conditions. The standard requires that the method of monitoring must have an accuracy, to a 95% confidence level, of not less than plus or minus 25% for the select PEL.

DOSH methodology.

Sampling procedure.

Apparatus:

Samples are collected by use of a personal sampling pump that can be calibrated within +/-5% of the recommended flow rate with the sampling filter in line. Samples are collected on 37 mm Gelman type A/E glass fiber filters treated with sulfuric acid. The filters are prepared by soaking each filter with 0.5 mL of 0.26N H_2SO_4. (0.26 N H_2SO_4 can be prepared by diluting 1.5 mL of 36N H_2SO_4 to 200 mL with deionized water.) The filters are dried in an oven at 100 degrees C. for one hour and then assembled into 3-piece 37 mm polystyrene cassettes without backup pads. The front filter is separated from the back filter by a polystyrene spacer. The cassettes are sealed with shrink bands and the ends are plugged with plastic plugs. After sampling, the filters are carefully removed from the cassettes and individually transferred to small vials containing approximately 2 mL deionized water. The vials must be tightly sealed. The water can be added before or after the filters are transferred. The vials must be sealable and capable of holding at least 7 mL of liquid. Small glass scintillation vials with caps containing Teflon liners are recommended.

Reagents:

Deionized water is needed for addition to the vials.

Sampling technique:

Immediately before sampling, remove the plastic plugs from the filter cassettes. Attach the cassette to the sampling pump with flexible tubing and place the cassette in the employee's breathing zone. After sampling, seal the cassettes with plastic plugs until the filters are transferred to the vials containing deionized water. At some convenient time within 10 hours of sampling, transfer the sample filters to vials. Seal the small vials lengthwise. Submit at least one blank filter with each sample set. Blanks should be handled in the same manner as samples, but no air is drawn through them. Record sample volumes (in L of air) for each sample, along with any potential interferences.

Retention efficiency:

A retention efficiency study was performed by drawing 100 L of air (80% relative humidity) at one L/min through sample filters that had been spiked with 0.814 micro-g MDA. Instead of using backup pads, blank acid-treated filters were used as backups in each cassette. Upon analysis, the top filters were found to have an average of 91.8% of the spiked amount. There was no MDA found on the bottom filters, so the amount lost was probably due to the slight instability of the MDA salt.

Extraction efficiency:

The average extraction efficiency for 6 filters spiked at the target concentration is 99.6%. The stability of extracted and derivatized samples was verified by reanalyzing the above 6 samples the next day using fresh standards. The average extraction efficiency for the reanalyzed samples is 98.7%.

Recommended air volume and sampling rate. The recommended air volume is 100 L. The recommended sampling rate is one L/min.

Interferences (sampling):

MDI appears to be a positive interference. It was found that when MDI was spiked onto an acid-treated filter, the MDI converted to MDA after air was drawn through it. Suspected interferences should be reported to the laboratory with submitted samples.

Safety precautions (sampling):

Attach the sampling equipment to the employees so that it will not interfere with work performance or safety. Follow all safety procedures that apply to the work area being sampled.

Analytical procedure:

Apparatus:

The following are required for analysis. A GC equipped with an electron capture detector. For this evaluation a Hewlett Packard 5880 Gas Chromatograph equipped with a Nickel 63 High Temperature Electron Capture Detector and a Linearizer was used. A GC column capable of separating the MDA derivative from the solvent and interferences. A 6 ft x 2 mm ID glass column packed with 3% OV-101 coated on 100/120 Gas Chrom Q or a 25 meter DB-1 or DB-5 capillary column is recommended for this evaluation. An electronic integrator or some other suitable means of measuring peak areas or heights.

Small resealable vials with Teflon-lined caps capable of holding 4 mL. A dispenser or pipet for toluene capable of delivering 2.9 mL. Pipets (or repipets with plastic or Teflon tips) capable of delivering 1 mL for the sodium hydroxide and buffer solutions. A repipet capable of delivering 25 micro-L HFAA. Syringes for preparation of standards and injection of standards and samples into a GC. Volumetric flasks and pipets to dilute the pure MDA in preparation of standards. Disposable pipets to transfer the toluene layers after the samples are extracted.

Reagents:

0.5 NaOH prepared from reagent grade NaOH. Toluene, pesticide grade. Burdick and Jackson distilled in glass toluene was used. Heptafluorobutyric acid anhydride (HFAA). HFAA from Pierce Chemical Company was used. pH 7.0 phosphate buffer, prepared from 136 g potassium dihydrogen phosphate and 1 L deionized water. The pH is adjusted to 7.0 with saturated sodium hydroxide solution. 4,4'-methylenedianiline (MDA), reagent grade.

Standard preparation:

Concentrated stock standards are prepared by diluting pure MDA with toluene. Analytical standards are prepared by injecting micro-L amounts of diluted stock standards into vials that contain 2.0 mL toluene. 25 micro-L HFAA are added to each vial and the vials are capped and shaken for 10 seconds. After 10 min, one mL of buffer is added to each vial. The vials are recapped and shaken for 10 seconds. After allowing the layers to separate, aliquots of the toluene (upper) layers are removed with a syringe and analyzed by GC. Analytical standard concentrations should bracket sample concentrations. Thus, if samples fall out of the range of prepared standards, additional standards must be prepared to ascertain detector response.

Sample preparation:

The sample filters are received in vials containing deionized water. One mL of 0.5N NaOH and 2.0 mL toluene are added to each vial. The vials are recapped and shaken for 10 seconds. After allowing the layers to separate, approximately one mL aliquots of the toluene (upper) layers are transferred to separate vials with clean disposable pipets. The toluene layers are treated and analyzed.

Analysis:

GC conditions.

Zone temperatures: Column-220 degrees C. Injector-235 degrees C. Detector-335 degrees C. Gas flows, N2 Column-30 mL/min He Purge-Column 0.9 mL/min. (capillary) with 30 mL/min. $ArCH_4$ (95/5) make up gas Injection volume: 5.0 uL Column: 6 ft x 1/8 in ID glass, 3% OV-101 on 100/120 Gas Chrom Q or 25 Retention time of MDA derivative: 2.5 to 3.5, depending on column and flow.

Chromatogram. Peak areas or heights are measured by an integrator or other suitable means. A calibration curve is constructed by plotting response (peak areas or heights) of standard injections versus micro-g of MDA per sample. Sample concentrations must be bracketed by standards.

Interferences (analytical):

Any compound that gives an electron capture detector response and has the same general retention time as the HFAA derivative of MDA is a potential interference. Suspected interferences reported to the laboratory with submitted samples by the industrial hygienist must be considered before samples are derivatized. GC parameters may be changed to possibly circumvent interferences. Retention time on a single column is not considered proof of chemical identity. Analyte identity should be confirmed by GC/MS if possible.

Calculations:

The analyte concentration for samples is obtained from the calibration curve in terms of micro-g MDA per sample. The extraction efficiency is 100%. If any MDA is found on the blank, that amount is subtracted from the sample amounts. The air concentrations are calculated using the following formulae. micro-$\mu g/m^3$ = (micro-μg MDA per sample) (1000)/(L of air sampled) ppb = (micro-$\mu g/m^3$) (24.46)/(198.3) = (micro-$\mu g/m^3$)(0.1233) where 24.46 is the molar volume at 25 degrees C. and 760 mm Hg.

Safety precautions (analytical). Avoid skin contact and inhalation of all chemicals. Restrict the use of all chemicals to a fume hood if possible. Wear safety glasses and a lab coat at all times while in the lab area.

[Statutory Authority: RCW 49.17.010, .040, .050, and .060. 16-09-085 (Order 15-08), § 296-155-173476, filed 04/19/16, effective 05/20/16. Statutory Authority: Chapter 49.17 RCW. 93-04-111 (Order 92-15), § 296-155-17347, filed 2/3/93, effective 3/15/93.]

WAC 296-155-174 Cadmium.

(1) **Scope**. This standard applies to all occupational exposures to cadmium and cadmium compounds, in all forms, in all construction work where an employee may potentially be exposed to cadmium. Construction work is defined as work involving construction, alteration, and/or repair, including but not limited to the following:

(a) Wrecking, demolition, or salvage of structures where cadmium or materials containing cadmium are present;

(b) Use of cadmium containing-paints and cutting, brazing, burning, grinding, or welding on surfaces that were painted with cadmium-containing paints;

(c) Construction, alteration, repair, maintenance, or renovation of structures, substrates, or portions thereof, that contain cadmium, or materials containing cadmium;

(d) Cadmium welding; cutting and welding cadmium-plated steel; brazing or welding with cadmium alloys;

(e) Installation of products containing cadmium;

(f) Electrical grounding with cadmium-welding, or electrical work using cadmium-coated conduit;

(g) Maintaining or retrofitting cadmium-coated equipment;

(h) Cadmium contamination/emergency cleanup; and

(i) Transportation, disposal, storage, or containment of cadmium or materials containing cadmium on the site or location at which construction activities are performed.

(2) **Definitions.**

Action level (AL). An airborne concentration of cadmium of 2.5 micrograms per cubic meter of air (2.5 $\mu g/m^3$), calculated as an 8-hour time-weighted average (TWA).

Authorized person. Any person authorized by the employer and required by work duties to be present in regulated areas or any person authorized by DOSH or regulations issued under it to be in regulated areas.

Competent person. A person designated by the employer to act on the employer's behalf who is capable of identifying existing and potential cadmium hazards in the workplace and the proper methods to control them in order to protect workers, and has the authority necessary to take prompt corrective measures to eliminate or control such hazards. The duties of a competent person include at least the following: Determining prior to the performance of work whether cadmium is present in the workplace; establishing, where necessary, regulated areas and assuring that access to and from those areas is limited to authorized employees; assuring the adequacy of any employee exposure monitoring required by this standard; assuring that all employees exposed to air cadmium levels above the PEL wear appropriate personal protective equipment and are trained in the use of appropriate methods of exposure control; assuring that proper hygiene facilities are provided and that workers are trained to use those facilities; and assuring that the engineering controls required by this standard are implemented, maintained in proper operating condition, and functioning properly.

Director. The director of the department of labor and industries or authorized representative.

Employee exposure and similar language referring to the air cadmium level to which an employee is exposed. The exposure to airborne cadmium that would occur if the employee were not using respiratory protective equipment.

Final medical determination. The written medical opinion of the employee's health status by the examining physician under subsection (12)(c) through (l) of this section or, if multiple physician review under subsection (12)(m) of this section or the alternative physician determination under subsection (12)(n) of this section is invoked, it is the final, written medical finding, recommendation or determination that emerges from that process.

High-efficiency particulate air (HEPA) filter. A filter capable of trapping and retaining at least 99.97% of mono-dispersed particles of 0.3 micrometers in diameter.

Regulated area. An area demarcated by the employer where an employee's exposure to airborne concentrations of cadmium exceeds, or can reasonably be expected to exceed the permissible exposure limit (PEL).

This section. This cadmium standard.

(3) **Permissible exposure limit (PEL)**. You must assure that no employee is exposed to an airborne concentration of cadmium in excess of 5 micrograms per cubic meter of air (5 $\mu g/m^3$), calculated as an 8-hour time-weighted average exposure (TWA).

(4) **Exposure monitoring.**

(a) General.

(i) Prior to the performance of any construction work where employees may be potentially exposed to cadmium, you must establish the applicability of this standard by determining whether cadmium is present in the workplace and whether there is the possibility that employee exposures will be at or above the action level. You must designate a competent person who must make this determination. You must use investigation and material testing techniques as appropriate, in the determination. Investigation must include a review of relevant plans, past reports, safety data sheets, and other available records, and consultations with the property owner and discussions with appropriate individuals and agencies.

(ii) Where cadmium has been determined to be present in the workplace, and it has been determined that there is a possibility the employee's exposure will be at or above the action level, the competent person must identify employees potentially exposed to cadmium at or above the action level.

(iii) Determinations of employee exposure must be made from breathing-zone air samples that reflect the monitored employee's regular, daily 8-hour TWA exposure to cadmium.

(iv) You must determine 8-hour TWA exposures for each employee on the basis of one or more personal breathing-zone air samples reflecting full shift exposure on each shift, for each job classification, in each work area. Where several employees perform the same job tasks, in the same job classification, on the same shift, in the same work area, and the length, duration, and level of cadmium exposures are similar, you may sample a representative fraction of the employees instead of all employees in order to meet this requirement. In representative sampling, you must sample the employee(s) expected to have the highest cadmium exposures.

(b) Specific.

(i) Initial monitoring. Except as provided for in (b)(iii) of this subsection, where a determination conducted under (a)(i) of this subsection shows the possibility of employee exposure to cadmium at or above the action level, you must conduct exposure monitoring as soon as practicable that is representative of the exposure for each employee in the workplace who is or may be exposed to cadmium at or above the action level.

(ii) In addition, if the employee periodically performs tasks that may expose the employee to a higher concentration of airborne cadmium, you must monitor the employee while performing those tasks.

(iii) Where you have objective data, as defined in subsection (14)(b) of this section, demonstrating that employee exposure to cadmium will not exceed airborne concentrations at or above the action level under the expected conditions of processing, use, or handling, you may rely upon such data instead of implementing initial monitoring.

(iv) Where a determination conducted under (a) or (b) of this subsection is made that a potentially exposed employee is not exposed to airborne concentrations of cadmium at or above the action level, you must make a written record of such determination. The record must include at least the monitoring data developed under (b)(i) through (iii) of this subsection, where applicable, and must also include the date of determination, and the name and Social Security number of each employee.

(c) Monitoring frequency (periodic monitoring).

(i) If the initial monitoring or periodic monitoring reveals employee exposures to be at or above the action level, you must monitor at a frequency and pattern needed to assure that the monitoring results reflect with reasonable accuracy the employee's typical exposure levels, given the variability in the tasks performed, work practices, and environmental conditions on the job site, and to assure the adequacy of respiratory selection and the effectiveness of engineering and work practice controls.

(ii) If the initial monitoring or the periodic monitoring indicates that employee exposures are below the action level and that result is confirmed by the results of another monitoring taken at least 7 days later, you may discontinue the monitoring for those employees whose exposures are represented by such monitoring.

(d) Additional monitoring. You must also institute the exposure monitoring required under (b)(i) and (c) of this subsection whenever there has been a change in the raw materials, equipment, personnel, work practices, or finished products that may result in additional employees being exposed to cadmium at or above the action level or in employees already exposed to cadmium at or above the action level being exposed above the PEL, or whenever the employer or competent person has any reason to suspect that any other change might result in such further exposure.

(e) Employee notification of monitoring results.

(i) No later than 5 working days after the receipt of the results of any monitoring performed under this section, you must notify each affected employee individually in writing of the results. In addition, within the same time period, you must post the results of the exposure monitoring in an appropriate location that is accessible to all affected employees.

(ii) Wherever monitoring results indicate that employee exposure exceeds the PEL, you must include in the written notice a statement that the PEL has been exceeded and a description of the corrective action being taken by the employer to reduce employee exposure to or below the PEL.

(f) Accuracy of measurement. You must use a method of monitoring and analysis that has an accuracy of not less than plus or minus 25% (± 25%), with a confidence level of 95%, for airborne concentrations of cadmium at or above the action level and the permissible exposure limit.

(5) **Regulated areas.**

(a) Establishment. You must establish a regulated area wherever an employee's exposure to airborne concentrations of cadmium is, or can reasonably be expected to be in excess of the permissible exposure limit (PEL).

(b) Demarcation. You must demarcate regulated areas from the rest of the workplace in any manner that adequately establishes and alerts employees of the boundaries of the regulated area, including employees who are or may be incidentally in the regulated areas, and that protects persons outside the area from exposure to airborne concentrations of cadmium in excess of the PEL.

(c) Access. You must limit access to regulated areas to authorized persons.

(d) Provision of respirators. You must supply each person entering a regulated area with and required to use a respirator, selected in accordance with subsection (7)(b) of this section.

(e) Prohibited activities. You must assure that employees do not eat, drink, smoke, chew tobacco or gum, or apply cosmetics in regulated areas, or carry the products associated with any of these activities into regulated areas or store such products in those areas.

(6) **Methods of compliance.**

(a) Compliance hierarchy.

(i) Except as specified in (a)(ii) of this subsection, you must implement engineering and work practice controls to reduce and maintain employee exposure to cadmium at or below the PEL, except to the extent that the employer can demonstrate that such controls are not feasible.

(ii) The requirement to implement engineering controls to achieve the PEL does not apply where the employer demonstrates the following:

(A) The employee is only intermittently exposed; and

(B) The employee is not exposed above the PEL on 30 or more days per year (12 consecutive months).

(iii) Wherever engineering and work practice controls are not sufficient to reduce employee exposure to or below the PEL, the employer nonetheless must implement such controls to reduce exposures to the lowest levels achievable. The employer must supplement such controls with respiratory protection that complies with the requirements of subsection (7) of this section and the PEL.

(iv) The employer must not use employee rotation as a method of compliance.

(b) Specific operations.

(i) Abrasive blasting. Abrasive blasting on cadmium or cadmium-containing materials must be conducted in a manner that will provide adequate protection.

(ii) Heating cadmium and cadmium-containing materials. Welding, cutting, and other forms of heating of cadmium or cadmium-containing materials must be conducted in accordance with the requirements of WAC 296-155-415 and 296-155-420, where applicable.

(c) Prohibitions.

(i) High speed abrasive disc saws and similar abrasive power equipment must not be used for work on cadmium or cadmium-containing materials unless they are equipped with appropriate engineering controls to minimize emissions, if the exposure levels are above the PEL.

(ii) Materials containing cadmium must not be applied by spray methods, if exposures are above the PEL, unless employees are protected with supplied-air respirators with full facepiece, hood, helmet, suit, operated in positive pressure mode and measures are instituted to limit overspray and prevent contamination of adjacent areas.

(d) Mechanical ventilation.

(i) When ventilation is used to control exposure, measurements that demonstrate the effectiveness of the system in controlling exposure, such as capture velocity, duct velocity, or static pressure must be made as necessary to maintain its effectiveness.

(ii) Measurements of the system's effectiveness in controlling exposure must be made as necessary within 5 working days of any change in production, process, or control that might result in a significant increase in employee exposure to cadmium.

(iii) Recirculation of air. If air from exhaust ventilation is recirculated into the workplace, the system must have a high efficiency filter and be monitored to assure effectiveness.

(iv) Procedures must be developed and implemented to minimize employee exposure to cadmium when maintenance of ventilation systems and changing of filters is being conducted.

(e) Compliance program.

(i) Where employee exposure to cadmium exceeds the PEL and the employer is required under (a) of this subsection to implement controls to comply with the PEL prior to commencement of the job you must establish and implement a written compliance program to reduce employee exposure to or below the PEL. To the extent that engineering and work practice controls cannot reduce exposures to or below the PEL, you must include in the written compliance program the use of appropriate respiratory protection to achieve compliance with the PEL.

(ii) You must review and update written compliance programs as often and as promptly as necessary to reflect significant changes in the employer's compliance status or significant changes in the lowest air cadmium level that is technologically feasible.

(iii) A competent person must review the comprehensive compliance program initially and after each change.

(iv) You must provide written compliance programs upon request for examination and copying to the director, or authorized representatives, affected employees, and designated employee representatives.

(7) **Respirator protection.**

(a) General. For employees who use respirators required by this section, the employer must provide each employee with an appropriate respirator that complies with the requirements of this section. Respirators must be used during:

(i) Periods necessary to install or implement feasible engineering and work-practice controls when employee exposures exceed the PEL.

(ii) Maintenance and repair activities, and brief or intermittent operations, for which employee exposures exceed the PEL and engineering and work-practice controls are not feasible or are not required.

(iii) Work operations in regulated areas in subsection (5) of this section.

(iv) Work operations for which the employer has implemented all feasible engineering and work-practice controls, and such controls are not sufficient to reduce exposures to or below the PEL.

(v) Emergencies.

(vi) Work operations for which an employee, who is exposed to cadmium at or above the action level, requests a respirator.

(vii) Work operations for which engineering controls are not required under (a)(ii) of this subsection to reduce employee exposures that exceed the PEL.

(b) Respirator program.

(i) You must develop, implement and maintain a respiratory protection program as required by chapter 296-842-WAC except WAC 296-842-14005, which covers each employee required by this chapter to use a respirator.

(ii) If an employee has breathing difficulty during fit testing or respirator use, the employer must provide the employee with a medical examination as required by subsection (12)(f)(ii) of this section to determine if the employee can use a respirator while performing the required duties.

(iii) No employees must use a respirator when, based on their recent medical examination, the examining physician determines that the employee will be unable to continue to function normally while using a respirator. If the physician determines the employee must be limited in, or removed from, their current job because of the employee's inability to use a respirator, the job limitation or removal must be conducted as required by (k) and (l) of this subsection.

(c) Respirator selection. You must:

(i) Select and provide the appropriate respirator as specified in this section and WAC 296-842-13005 in the respirator rule.

- Provide employees with full facepiece respirators when they experience eye irritation.
- Make sure high-efficiency particulate air (HEPA) filters or N-, R-, or P-100 series filters are provided for powered air-purifying respirators (PAPRs) and negative-pressure air-purifying respirators.

(ii) You must provide a powered, air-purifying respirator (PAPR) instead of a negative-pressure respirator when an employee entitled to a respirator chooses to use this type of respirator and such a respirator will provide adequate protection to the employee.

(8) **Emergency situations**. You must develop and implement a written plan for dealing with emergency situations involving substantial releases of airborne cadmium. The plan must include provisions for the use of appropriate respirators and personal protective equipment. In addition, employees not essential to correcting the emergency situation must be restricted from the area and normal operations halted in that area until the emergency is abated.

(9) **Protective work clothing and equipment.**

(a) Provision and use. If an employee is exposed to airborne cadmium above the PEL or where skin or eye irritation is associated with cadmium exposure at any level, you must provide at no cost to the employee, and assure that the employee uses, appropriate protective work clothing and equipment that prevents contamination of the employee and the employee's garments. Protective work clothing and equipment includes, but is not limited to:

(i) Coveralls or similar full-body work clothing;

(ii) Gloves, head coverings, and boots or foot coverings; and

(iii) Face shields, vented goggles, or other appropriate protective equipment that complies with WAC 296-155-215.

(b) Removal and storage.

(i) You must assure that employees remove all protective clothing and equipment contaminated with cadmium at the completion of the work shift and do so only in change rooms provided in accordance with subsection (10)(a) of this section.

(ii) You must assure that no employee takes cadmium-contaminated protective clothing or equipment from the workplace, except for employees authorized to do so for purposes of laundering, cleaning, maintaining, or disposing of cadmium-contaminated protective clothing and equipment at an appropriate location or facility away from the workplace.

(iii) You must assure that contaminated protective clothing and equipment, when removed for laundering, cleaning, maintenance, or disposal, is placed and stored in sealed, impermeable bags or other closed, impermeable containers that are designed to prevent dispersion of cadmium dust.

(iv) You must assure that containers of contaminated protective clothing and equipment that are to be taken out of the change rooms or the workplace for laundering, cleaning, maintenance or disposal must bear labels in accordance with subsection (13)(c) (ii) of this section.

(c) Cleaning, replacement, and disposal.

(i) You must provide the protective clothing and equipment required by (a) of this subsection in a clean and dry condition as often as necessary to maintain its effectiveness, but in any event at least weekly. The employer is responsible for cleaning and laundering the protective clothing and equipment required by this subsection to maintain its effectiveness and is also responsible for disposing of such clothing and equipment.

(ii) The employer also is responsible for repairing or replacing required protective clothing and equipment as needed to maintain its effectiveness. When rips or tears are detected while an employee is working they must be immediately mended, or the work suit must be immediately replaced.

(iii) You must prohibit the removal of cadmium from protective clothing and equipment by blowing, shaking, or any other means that disperses cadmium into the air.

(iv) You must assure that any laundering of contaminated clothing or cleaning of contaminated equipment in the workplace is done in a manner that prevents the release of airborne cadmium in excess of the permissible exposure limit prescribed in subsection (3) of this section.

(v) You must inform any person who launders or cleans protective clothing or equipment contaminated with cadmium of the potentially harmful effects of exposure to cadmium, and that the clothing and equipment should be laundered or cleaned in a manner to effectively prevent the release of airborne cadmium in excess of the PEL.

(10) **Hygiene areas and practices.**

(a) General. For employees whose airborne exposure to cadmium is above the PEL, you must provide clean change rooms, handwashing facilities, showers, and lunchroom facilities that comply with WAC 296-155-140.

(b) Change rooms. You must ensure that change rooms are equipped with separate storage facilities for street clothes and for protective clothing and equipment, which are designed to prevent dispersion of cadmium and contamination of the employee's street clothes.

(c) Showers and handwashing facilities.

(i) You must ensure that employees whose airborne exposure to cadmium is above the PEL shower during the end of the work shift.

(ii) You must ensure that employees who are exposed to cadmium above the PEL wash their hands and faces prior to eating, drinking, smoking, chewing tobacco or gum, or applying cosmetics.

(d) Lunchroom facilities.

(i) You must ensure that the lunchroom facilities are readily accessible to employees, that tables for eating are maintained free of cadmium, and that no employee in a lunchroom facility is exposed at any time to cadmium at or above a concentration of 2.5 $\mu g/m^3$.

(ii) You must ensure that employees do not enter lunchroom facilities with protective work clothing or equipment unless surface cadmium has been removed from the clothing and equipment by HEPA vacuuming or some other method that removes cadmium dust without dispersing it.

(11) **Housekeeping.**

(a) You must maintain all surfaces as free as practicable of accumulations of cadmium.

(b) You must clean up all spills and sudden releases of material containing cadmium as soon as possible.

(c) You must clean surfaces contaminated with cadmium must, wherever possible, by vacuuming or other methods that minimize the likelihood of cadmium becoming airborne.

(d) You must use HEPA-filtered vacuuming equipment or equally effective filtration methods for vacuuming. You must use the equipment and empty it in a manner that minimizes the reentry of cadmium into the workplace.

(e) Shoveling, dry or wet sweeping, and brushing may be used only where vacuuming or other methods that minimize the likelihood of cadmium becoming airborne have been tried and found not to be effective.

(f) You must not use compressed air to remove cadmium from any surface unless the compressed air is used in conjunction with a ventilation system designed to capture the dust cloud created by the compressed air.

(g) You must collect and dispose of waste, scrap, debris, bags, containers, personal protective equipment, and clothing contaminated with cadmium and consigned for disposal in sealed impermeable bags or other closed, impermeable containers. These bags and containers must be labeled in accordance with subsection (13)(c)(ii) of this section.

(12) **Medical surveillance.**

(a) General.

(i) Scope.

(A) Currently exposed – You must institute a medical surveillance program for all employees who are or may be exposed at or above the action level and all employees who perform the following tasks, operations, or jobs: Electrical grounding with cadmium-welding; cutting, brazing, burning, grinding, or welding on surfaces that were painted with cadmium-containing paints; electrical work using cadmium-coated conduit; use of cadmium containing paints; cutting and welding cadmium-plated steel; brazing or welding with cadmium alloys; fusing of reinforced steel by cadmium welding; maintaining or retrofitting cadmium-coated equipment; and, wrecking and demolition where cadmium is present. A medical surveillance program will not be required if the employer demonstrates that the employee:

(I) Is not currently exposed by the employer to airborne concentrations of cadmium at or above the action level on 30 or more days per year (12 consecutive months); and

(II) Is not currently exposed by the employer in those tasks on 30 or more days per year (12 consecutive months).

(B) Previously exposed – You must also institute a medical surveillance program for all employees who might previously have been exposed to cadmium by the employer prior to the effective date of this section in tasks specified under (a)(i)(A) of this subsection, unless the employer demonstrates that the employee did not in the years prior to the effective date of this section work in those tasks for the employer with exposure to cadmium for an aggregated total of more than 12 months.

(ii) To determine an employee's fitness for using a respirator, you must provide the limited medical examination specified in (f) of this subsection.

(iii) You must ensure that all medical examinations and procedures required by this section are performed by or under the supervision of a licensed physician, who has read and is familiar with the health effects WAC 296-62-07441, Appendix A, the regulatory text of this section, the protocol for sample handling and lab selection in WAC 296-62-07451, Appendix F, and the questionnaire of WAC 296-62-07447, Appendix D.

(iv) You must provide the medical surveillance required by this section, including multiple physician review under (m) of this subsection without cost to employees, and at a time and place that is reasonable and convenient to employees.

(v) You must ensure that the collecting and handling of biological samples of cadmium in urine (CdU), cadmium in blood (CdB), and beta-2 microglobulin in urine (B_2-M) taken from employees under this section is done in a manner that assures their reliability and that analysis of biological samples of cadmium in urine (CdU), cadmium in blood (CdB), and beta-2 microglobulin in urine (B_2-M) taken from employees under this section is performed in laboratories with demonstrated proficiency to perform the particular analysis. (See WAC 296-62-07451, Appendix F.)

(b) Initial examination.

(i) For employees covered by medical surveillance under (a)(i) of this subsection, you must provide an initial medical examination. The examination must be provided to those employees within 30 days after initial assignment to a job with exposure to cadmium or no later than 90 days after the effective date of this section, whichever date is later.

(ii) The initial medical examination must include:

(A) A detailed medical and work history, with emphasis on: Past, present, and anticipated future exposure to cadmium; any history of renal, cardiovascular, respiratory, hematopoietic, reproductive, and/or musculo-skeletal system dysfunction; current usage of medication with potential nephrotoxic side-effects; and smoking history and current status; and

(B) Biological monitoring that includes the following tests:

(I) Cadmium in urine (CdU), standardized to grams of creatinine (g/Cr);

(II) Beta-2 microglobulin in urine (B_2-M), standardized to grams of creatinine (g/Cr), with pH specified, as described in WAC 296-62-07451, Appendix F; and

(III) Cadmium in blood (CdB), standardized to liters of whole blood (lwb).

(iii) Recent examination: An initial examination is not required to be provided if adequate records show that the employee has been examined in accordance with the requirements of (b)(ii) of this subsection within the past 12 months. In that case, you must maintain such records as part of the employee's medical record and the prior exam must be treated as if it were an initial examination for the purposes of (c) and (d) of this subsection.

(c) Actions triggered by initial biological monitoring.

(i) If the results of the biological monitoring tests in the initial examination show the employee's CdU level to be at or below 3 μg/g Cr, B_2-M level to be at or below 300 μg/g Cr and CdB level to be at or below 5 μg/lwb, then:

(A) For employees who are subject to medical surveillance under (a)(i)(A) of this subsection because of current or anticipated exposure to cadmium, you must provide the minimum level of periodic medical surveillance in accordance with the requirements in (d)(i) of this subsection; and

(B) For employees who are subject to medical surveillance under (a)(i)(B) of this subsection because of prior but not current exposure, you must provide biological monitoring for CdU, B_2-M, and CdB one year after the initial biological monitoring and then you must comply with the requirements of (d)(vi) of this subsection.

(ii) For all employees who are subject to medical surveillance under (a)(i) of this subsection, if the results of the initial biological monitoring tests show the level of CdU to exceed 3 μg/g Cr, the level of B_2-M to be in excess of 300 μg/g Cr, or the level of CdB to be in excess of 5 μg/lwb, you must:

(A) Within two weeks after receipt of biological monitoring results, reassess the employee's occupational exposure to cadmium as follows:

(I) Reassess the employee's work practices and personal hygiene;

(II) Reevaluate the employee's respirator use, if any, and the respirator program;

(III) Review the hygiene facilities;

(IV) Reevaluate the maintenance and effectiveness of the relevant engineering controls;

(V) Assess the employee's smoking history and status;

(B) Within 30 days after the exposure reassessment, specified in (c)(ii)(A) of this subsection, take reasonable steps to correct any deficiencies found in the reassessment that may be responsible for the employee's excess exposure to cadmium; and

(C) Within 90 days after receipt of biological monitoring results, provide a full medical examination to the employee in accordance with the requirements of (d)(ii) of this subsection. After completing the medical examination, the examining physician must determine in a written medical opinion whether to medically remove the employee. If the physician determines that medical removal is not necessary, then until the employee's CdU level falls to or below 3 μg/g Cr, B_2-M level falls to or below 300 μg/g Cr and CdB level falls to or below 5 μg/lwb, you must:

(I) Provide biological monitoring in accordance with (b)(ii)(B) of this subsection on a semiannual basis; and

(II) Provide annual medical examinations in accordance with (d)(ii) of this subsection.

(iii) For all employees who are subject to medical surveillance under (a)(i) of this subsection, if the results of the initial biological monitoring tests show the level of CdU to be in excess of 15 μg/g Cr, or the level of CdB to be in excess of 15 μ g/lwb, or the level of B_2-M to be in excess of 1,500 μg/g Cr, you must comply with the requirements of (c)(ii)(A) and (B) of this subsection. Within 90 days after receipt of biological monitoring results, you must provide a full medical examination to the employee in accordance with the requirements of (d)(ii) of this subsection. After completing the medical examination, the examining physician must determine in a written medical opinion whether to medically remove the employee. However, if the initial biological monitoring results and the biological monitoring results obtained during the medical examination both show that: CdU exceeds 15 μg/g Cr; or CdB exceeds 15 μg/lwb; or B_2-M exceeds 1500 μ/g Cr, and in addition CdU exceeds 3 μg/g Cr or CdB exceeds 5 μg/liter of whole blood, then the physician must medically remove the employee from exposure to cadmium at or above the action level. If the second set of biological monitoring results obtained during the medical examination does not show that a mandatory removal trigger level has been exceeded, then the employee is not required to be removed by the mandatory provisions of this section. If the employee is not required to be removed by the mandatory provisions of this section or by the physician's determination, then until the employee's CdU level falls to or below 3 μg/g Cr, B_2-M level falls to or below 300 μg/g Cr and CdB level falls to or below 5 μg/lwb, you must:

(A) Periodically reassess the employee's occupational exposure to cadmium;

(B) Provide biological monitoring in accordance with (b)(ii)(B) of this subsection on a quarterly basis; and

(C) Provide semiannual medical examinations in accordance with (d)(ii) of this subsection.

(iv) For all employees to whom medical surveillance is provided, beginning on January 1, 1999, and in lieu of (c)(iii) of this subsection, whenever the results of initial biological monitoring tests show the employee's CdU level to be in excess of 7 μg/g Cr, or B_2-M level to be in excess of 750 μg/g Cr, or CdB level to be in excess of 10 μg/lwb, you must comply with the requirements of (c)(ii)(A) and (B) of this subsection. Within 90 days after receipt of biological monitoring results, you must provide a full medical examination to the employee in accordance with the requirements of (d)(ii) of this subsection. After completing the medical examination, the examining physician must determine in a written medical opinion whether to medically remove the employee. However, if the initial biological monitoring results and the biological monitoring results obtained during the medical examination both show that: CdU exceeds 7 μg/g Cr; or CdB exceeds 10 μg/lwb; or B_2-M exceeds 750 μg/g Cr, and in addition CdU exceeds 3 μg/g Cr or CdB exceeds 5 μg/liter of whole blood, then the physician must medically remove the employee from exposure to cadmium at or above the action level. If the second set of biological monitoring results obtained during the medical examination does not show that a mandatory removal trigger level has been exceeded, then the

employee is not required to be removed by the mandatory provisions of this section. If the employee is not required to be removed by the mandatory provisions of this section or by the physician's determination, then until the employee's CdU level falls to or below 3 μg/g Cr, B_2-M level falls to or below 300 μg/g Cr and CdB level falls to or below 5 μg/lwb, you must:

(A) Periodically reassess the employee's occupational exposure to cadmium;

(B) Provide biological monitoring in accordance with (b)(ii)(B) of this subsection on a quarterly basis; and

(C) Provide semiannual medical examinations in accordance with (d)(ii) of this subsection.

(d) Periodic medical surveillance.

(i) For each employee who is covered by medical surveillance under (a)(i)(A) of this subsection because of current or anticipated exposure to cadmium, you must provide at least the minimum level of periodic medical surveillance, which consists of periodic medical examinations and periodic biological monitoring. A periodic medical examination must be provided within one year after the initial examination required by (b) of this subsection and thereafter at least biennially. You must provide biological sampling at least annually either as part of a periodic medical examination or separately as periodic biological monitoring.

(ii) The periodic medical examination must include:

(A) A detailed medical and work history, or update thereof, with emphasis on: Past, present, and anticipated future exposure to cadmium; smoking history and current status; reproductive history; current use of medications with potential nephrotoxic side-effects; any history of renal, cardiovascular, respiratory, hematopoietic, and/or musculo-skeletal system dysfunction; and as part of the medical and work history, for employees who wear respirators, questions 3 through 11 and 25 through 32 in WAC 296-62-07447, Appendix D;

(B) A complete physical examination with emphasis on: Blood pressure, the respiratory system, and the urinary system;

(C) A 14 inch by 17 inch, or a reasonably standard sized posterior-anterior chest x-ray (after the initial x-ray, the frequency of chest x-rays is to be determined by the examining physician);

(D) Pulmonary function tests, including forced vital capacity (FVC) and forced expiratory volume at one second (FEV1);

(E) Biological monitoring, as required in (b)(ii)(B) of this subsection;

(F) Blood analysis, in addition to the analysis required under (b)(ii)(B) of this subsection, including blood urea nitrogen, complete blood count, and serum creatinine;

(G) Urinalysis, in addition to the analysis required under (b)(ii)(B) of this subsection, including the determination of albumin, glucose, and total and low molecular weight proteins;

(H) For males over 40 years old, prostate palpation, or other at least as effective diagnostic test(s); and

(I) Any additional tests or procedures deemed appropriate by the examining physician.

(iii) Periodic biological monitoring must be provided in accordance with (b)(ii)(B) of this subsection.

(iv) If the results of periodic biological monitoring or the results of biological monitoring performed as part of the periodic medical examination show the level of the employee's CdU, B_2-M, or CdB to be in excess of the levels specified in (c)(ii) and (iii) of this subsection; or, beginning on January 1, 1999, in excess of the levels specified in (c)(ii) or (iv) of this subsection, you must take the appropriate actions specified in (c)(ii) through (iv) of this subsection, respectively.

(v) For previously exposed employees under (a)(i)(B) of this subsection:

(A) If the employee's levels of CdU did not exceed 3 μg/g Cr, CdB did not exceed 5 μg/lwb, and B_2-M did not exceed 300 μg/g Cr in the initial biological monitoring tests, and if the results of the follow-up biological monitoring required by (c)(i)(B) of this subsection one year after the initial examination confirm the previous results, the employer may discontinue all periodic medical surveillance for that employee.

(B) If the initial biological monitoring results for CdU, CdB, or B_2-M were in excess of the levels specified in (c)(i) of this subsection, but subsequent biological monitoring results required by (c)(ii) through (iv) of this subsection show that the employee's CdU levels no longer exceed 3 μg/g Cr, CdB levels no longer exceed 5 μg/lwb, and B_2-M levels no longer exceed 300 μg/g Cr, you must provide biological monitoring for CdU, CdB, and B_2-M one year after these most recent biological monitoring results. If the results of the follow-up biological monitoring specified in this section, confirm the previous results, the employer may discontinue all periodic medical surveillance for that employee.

(C) However, if the results of the follow-up tests specified in (d)(v)(A) or (B) of this subsection indicate that the level of the employee's CdU, B_2-M, or CdB exceeds these same levels, the employer is required to provide annual medical examinations in accordance with the provisions of (d)(ii) of this subsection until the results of biological monitoring are consistently below these levels or the examining physician determines in a written medical opinion that further medical surveillance is not required to protect the employee's health.

(vi) A routine, biennial medical examination is not required to be provided in accordance with (c)(i) and (d) of this subsection if adequate medical records show that the employee has been examined in accordance with the requirements of (d)(ii) of this subsection within the past 12 months. In that case, you must maintain such records as part of the employee's medical record, and the next routine, periodic medical examination must be made available to the employee within two years of the previous examination.

(e) Actions triggered by medical examinations. If the results of a medical examination carried out in accordance with this section indicate any laboratory or clinical finding consistent with cadmium toxicity that does not require employer action under (b), (c), or (d) of this subsection, you must take the following steps and continue to take them until the physician determines that they are no longer necessary.

(i) Periodically reassess: The employee's work practices and personal hygiene; the employee's respirator use, if any; the employee's smoking history and status; the respiratory protection program; the hygiene facilities; the maintenance and effectiveness of the relevant engineering controls; and take all reasonable steps to correct the deficiencies found in the reassessment that may be responsible for the employee's excess exposure to cadmium.

(ii) Provide semiannual medical reexaminations to evaluate the abnormal clinical sign(s) of cadmium toxicity until the results are normal or the employee is medically removed; and

(iii) Where the results of tests for total proteins in urine are abnormal, provide a more detailed medical evaluation of the toxic effects of cadmium on the employee's renal system.

(f) Examination for respirator use.

(i) To determine an employee's fitness for respirator use, you must provide a medical examination that includes the elements specified in (f)(i)(A) through (D) of this subsection. This examination must be provided prior to the employee's being assigned to a job that requires the use of a respirator or no later than 90 days after this section goes into effect, whichever date is later, to any employee without a medical examination within the preceding 12 months that satisfies the requirements of this section.

(A) A detailed medical and work history, or update thereof, with emphasis on: Past exposure to cadmium; smoking history and current status; any history of renal, cardiovascular, respiratory, hematopoietic, and/or musculo-skeletal system dysfunction; a description of the job for which the respirator is required; and questions 3 through 11 and 25 through 32 in WAC 296-62-07447, Appendix D;

(B) A blood pressure test;

(C) Biological monitoring of the employee's levels of CdU, CdB and B_2-M in accordance with the requirements of (b)(ii)(B) of this subsection, unless such results already have been obtained within the 12 months; and

(D) Any other test or procedure that the examining physician deems appropriate.

(ii) After reviewing all the information obtained from the medical examination required in (f)(i) of this subsection, the physician must determine whether the employee is fit to wear a respirator.

(iii) Whenever an employee has exhibited difficulty in breathing during a respirator fit test or during use of a respirator, you must, as soon as possible, provide the employee with a periodic medical examination in accordance with (d)(ii) of this subsection to determine the employee's fitness to wear a respirator.

(iv) Where the results of the examination required under (f)(i), (ii), or (iii) of this subsection are abnormal, you must consider medical limitation or prohibition of respirator use. If the employee is allowed to wear a respirator, the employee's ability to continue to do so must be periodically evaluated by a physician.

(g) Emergency examinations.

(i) In addition to the medical surveillance required in (b) through (f) of this subsection, you must provide a medical examination as soon as possible to any employee who may have been acutely exposed to cadmium because of an emergency.

(ii) The examination must include the requirements of (d)(ii), of this subsection, with emphasis on the respiratory system, other organ systems considered appropriate by the examining physician, and symptoms of acute overexposure, as identified in Appendix A, WAC 296-62-07441 (2)(b)(i) and (ii) and (4).

(h) Termination of employment examination.

(i) At termination of employment, you must provide a medical examination in accordance with (d)(ii) of this subsection, including a chest x-ray where necessary, to any employee to whom at any prior time the employer was required to provide medical surveillance under (a)(i) or (g) of this subsection. However, if the last examination satisfied the requirements of (d)(ii) of this subsection and was less than six months prior to the date of termination, no further examination is required unless otherwise specified in (c) or (e) of this subsection;

(ii) In addition, if the employer has discontinued all periodic medical surveillance under (d)(v) of this subsection, no termination of employment medical examination is required.

(i) Information provided to the physician. You must provide the following information to the examining physician:

(i) A copy of this standard and appendices;

(ii) A description of the affected employee's former, current, and anticipated duties as they relate to the employee's occupational exposure to cadmium;

(iii) The employee's former, current, and anticipated future levels of occupational exposure to cadmium;

(iv) A description of any personal protective equipment, including respirators, used or to be used by the employee, including when and for how long the employee has used that equipment; and

(v) Relevant results of previous biological monitoring and medical examinations.

(j) Physician's written medical opinion.

(i) You must promptly obtain a written, signed, medical opinion from the examining physician for each medical examination performed on each employee. This written opinion must contain:

(A) The physician's diagnosis for the employee;

(B) The physician's opinion as to whether the employee has any detected medical condition(s) that would place the employee at increased risk of material impairment to health from further exposure to cadmium, including any indications of potential cadmium toxicity;

(C) The results of any biological or other testing or related evaluations that directly assess the employee's absorption of cadmium;

(D) Any recommended removal from, or limitation on the activities or duties of the employee or on the employee's use of personal protective equipment, such as respirators;

(E) A statement that the physician has clearly and carefully explained to the employee the results of the medical examination, including all biological monitoring results and any medical conditions related to cadmium exposure that require further evaluation or treatment, and any limitation on the employee's diet or use of medications.

(ii) You must promptly obtain a copy of the results of any biological monitoring provided by an employer to an employee independently of a medical examination under (b) and (d) of this subsection, and, in lieu of a written medical opinion, an explanation sheet explaining those results.

(iii) You must instruct the physician not to reveal orally or in the written medical opinion given to the employer specific findings or diagnoses unrelated to occupational exposure to cadmium.

(k) Medical removal protection (MRP).

(i) General.

(A) You must temporarily remove an employee from work where there is excess exposure to cadmium on each occasion that medical removal is required under (c), (d), or (f) of this subsection and on each occasion that a physician determines in a written medical opinion that the employee should be removed from such exposure. The physician's determination may be based on biological monitoring results, inability to wear a respirator, evidence of illness, other signs or symptoms of cadmium-related dysfunction or disease, or any other reason deemed medically sufficient by the physician.

(B) You must medically remove an employee in accordance with (k) of this subsection regardless of whether at the time of removal a job is available into which the removed employee may be transferred.

(C) Whenever an employee is medically removed under (k) of this subsection, you must transfer the removed employee to a job where the exposure to cadmium is within the permissible levels specified in subsection (12) of this section as soon as one becomes available.

(D) For any employee who is medically removed under the provisions of (k)(i) of this subsection, you must provide follow-up medical examinations semiannually until, in a written medical opinion, the examining physician determines that either the employee may be returned to his/her former job status or the employee must be permanently removed from excess cadmium exposure.

(E) You may not return an employee who has been medically removed for any reason to their former job status until a physician determines in a written medical opinion that continued medical removal is no longer necessary to protect the employee's health.

(ii) Where an employee is found unfit to wear a respirator under (f)(ii) of this subsection, you must remove the employee from work where exposure to cadmium is above the PEL.

(iii) Where removal is based upon any reason other than the employee's inability to wear a respirator, you must remove the employee from work where exposure to cadmium is at or above the action level.

(iv) Except as specified in (k)(v) of this subsection, no employee who was removed because their level of CdU, CdB and/or B_2-M exceeded the trigger levels in (c) or (d) of this subsection may be returned to work with exposure to cadmium at or above the action level until the employee's levels of CdU fall to or below 3 μg/g Cr, CdB fall to or below 5 μg/lwb, and B_2-M fall to or below 300 μg/g Cr.

(v) However, when in the examining physician's opinion continued exposure to cadmium will not pose an increased risk to the employee's health and there are special circumstances that make continued medical removal an inappropriate remedy, the physician must fully discuss these matters with the employee, and then in a written determination may return a worker to their former job status despite what would otherwise be unacceptably high biological monitoring results. Thereafter and until such time as the employee's biological monitoring results have decreased to levels where they could have been returned to their former job status, the returned employee must continue medical surveillance as if they were still on medical removal. Until such time, the employee is no longer subject to mandatory medical removal. Subsequent questions regarding the employee's medical removal must be decided solely by a final medical determination.

(vi) Where an employer, although not required by this section to do so, removes an employee from exposure to cadmium or otherwise places limitations on an employee due to the effects of cadmium exposure on the employee's medical condition, you must provide the same medical removal protection benefits to that employee under (l) of this subsection as would have been provided had the removal been required under (k) of this subsection.

(l) Medical removal protection benefits.

(i) You must provide medical removal protection benefits to an employee for up to a maximum of 18 months each time, and while the employee is temporarily medically removed under (k) of this subsection.

(ii) For purposes of this section, the requirement that the employer provide medical removal protection benefits means that you must maintain the total normal earnings, seniority, and all other employee rights and benefits of the removed employee, including the employee's right to their former job status, as if the employee had not been removed from the employee's job or otherwise medically limited.

(iii) Where, after 18 months on medical removal because of elevated biological monitoring results, the employee's monitoring results have not declined to a low enough level to permit the employee to be returned to their former job status:

(A) You must make available to the employee a medical examination pursuant to this section in order to obtain a final medical determination as to whether the employee may be returned to their former job status or must be permanently removed from excess cadmium exposure; and

(B) You must assure that the final medical determination indicates whether the employee may be returned to their former job status and what steps, if any, should be taken to protect the employee's health.

(iv) You may condition the provision of medical removal protection benefits upon the employee's participation in medical surveillance provided in accordance with this section.

(m) Multiple physician review.

(i) If the employer selects the initial physician to conduct any medical examination or consultation provided to an employee under this section, the employee may designate a second physician to:

(A) Review any findings, determinations, or recommendations of the initial physician; and

(B) Conduct such examinations, consultations, and laboratory tests as the second physician deems necessary to facilitate this review.

(ii) You must promptly notify an employee of the right to seek a second medical opinion after each occasion that an initial physician provided by the employer conducts a medical examination or consultation pursuant to this section. The employer may condition its participation in, and payment for, multiple physician review upon the employee doing the following within 15 days after receipt of this notice, or receipt of the initial physician's written opinion, whichever is later:

(A) Informing the employer that they intend to seek a medical opinion; and

(B) Initiating steps to make an appointment with a second physician.

(iii) If the findings, determinations, or recommendations of the second physician differ from those of the initial physician, then the employer and the employee must assure that efforts are made for the two physicians to resolve any disagreement.

(iv) If the two physicians have been unable to quickly resolve their disagreement, then the employer and the employee, through their respective physicians, must designate a third physician to:

(A) Review any findings, determinations, or recommendations of the other two physicians; and

(B) Conduct such examinations, consultations, laboratory tests, and discussions with the other two physicians as the third physician deems necessary to resolve the disagreement among them.

(v) You must act consistently with the findings, determinations, and recommendations of the third physician, unless the employer and the employee reach an agreement that is consistent with the recommendations of at least one of the other two physicians.

(n) Alternate physician determination. The employer and an employee or designated employee representative may agree upon the use of any alternate form of physician determination in lieu of the multiple physician review provided by (m) of this subsection, so long as the alternative is expeditious and at least as protective of the employee.

(o) Information the employer must provide the employee.

(i) You must provide a copy of the physician's written medical opinion to the examined employee within 5 working days after receipt thereof.

(ii) You must provide the employee with a copy of the employee's biological monitoring results and an explanation sheet explaining the results within 5 working days after receipt thereof.

(iii) Within 30 days after a request by an employee, you must provide the employee with the information the employer is required to provide the examining physician under (i) of this subsection.

(p) Reporting. In addition to other medical events that are required to be reported on the OSHA Form No. 300, you must report any abnormal condition or disorder caused by occupational exposure to cadmium associated with employment as specified in Chapter (V)(E) of the Bureau of Labor Statistics Recordkeeping Guidelines for Occupational Injuries and Illnesses.

(13) **Communication of cadmium hazards to employees.**

(a) You must include cadmium in the program established to comply with the requirements of DOSH's Hazard Communication Standard (HCS), WAC 296-901-140. You must ensure that each employee has access to labels on containers of cadmium safety data sheets (SDSs), and is trained in accordance with the provisions of HCS and (d) of this subsection. You must provide information on at least the following hazards: Cancer; lung effects; kidney effects; and acute toxicity effects.

(b) Warning signs.

(i) You must provide and display warning signs in regulated areas. In addition, you must post warning signs at all approaches to regulated areas so that an employee may read the signs and take necessary protective steps before entering the area.

(ii) Warning signs required by (b)(i) of this subsection must bear the following legend:

DANGER
CADMIUM
MAY CAUSE CANCER
CAUSES DAMAGE TO LUNGS AND KIDNEYS
WEAR RESPIRATORY PROTECTION IN HIS AREA
AUTHORIZED PERSONNEL ONLY

(iii) You must ensure that signs required by this section are illuminated, cleaned, and maintained as necessary so that the legend is readily visible.

(iv) Prior to June 1, 2016, employers may use the following legend in lieu of that specified in (b)(i) of this subsection.

DANGER
CADMIUM
CANCER HAZARD
CAN CAUSE LUNG AND KIDNEY DISEASE
AUTHORIZED PERSONNEL ONLY
RESPIRATORS REQUIRED IN THIS AREA

(c) Warning labels.

(i) Shipping and storage containers containing cadmium or cadmium compounds must bear appropriate warning labels, as specified in (a) of this subsection.

(ii) The warning labels for containers of cadmium-contaminated protective clothing, equipment, waste, scrap, or debris must include at least the following information:

DANGER
CONTAINS CADMIUM
MAY CAUSE CANCER
CAUSES DAMAGE TO LUNGS AND KIDNEYS
AVOID CREATING DUST

(iii) Where feasible, installed cadmium products must have a visible label or other indication that cadmium is present.

(iv) Prior to June 1, 2015, employers may include the following information on shipping and storage containers containing cadmium, cadmium compounds, or cadmium-contaminated clothing, equipment, waste, scrap, or debris in lieu of the labeling requirements specified in (c)(i) and (ii) of this subsection:

DANGER
CONTAINS CADMIUM
CANCER HAZARD
AVOID CREATING DUST
CAN CAUSE LUNG AND KIDNEY DISEASE

(d) Employee information and training.

(i) You must institute a training program for all employees who are potentially exposed to cadmium, assure employee participation in the program, and maintain a record of the contents of such program.

(ii) You must provide training prior to or at the time of initial assignment to a job involving potential exposure to cadmium and at least annually thereafter.

(iii) You must make the training program understandable to the employee and you must ensure that each employee is informed of the following:

(A) The health hazards associated with cadmium exposure, with special attention to the information incorporated in WAC 296-62-07441, Appendix A;

(B) The quantity, location, manner of use, release, and storage of cadmium in the workplace and the specific nature of operations that could result in exposure to cadmium, especially exposures above the PEL;

(C) The engineering controls and work practices associated with the employee's job assignment;

(D) The measures employees can take to protect themselves from exposure to cadmium, including modification of such habits as smoking and personal hygiene, and specific procedures the employer has implemented to protect employees from exposure to cadmium such as appropriate work practices, emergency procedures, and the provision of personal protective equipment;

(E) The purpose, proper selection, fitting, proper use, and limitations of respirators and protective clothing;

(F) The purpose and a description of the medical surveillance program required by subsection (12) of this section;

(G) The contents of this section and its appendices; and

(H) The employee's rights of access to records under chapter 296-62 WAC, Part B.

(iv) Additional access to information and training program and materials.

(A) You must make a copy of this section and its appendices readily available to all affected employees and you must provide a copy without cost if requested.

(B) Upon request, you must provide to the director or authorized representative, all materials relating to the employee information and the training program.

(e) Multi-employer workplace. In a multi-employer workplace, an employer who produces, uses, or stores cadmium in a manner that may expose employees of other employers to cadmium must notify those employers of the potential hazard in accordance with WAC 296-901-140 of the hazard communication standard.

(14) **Recordkeeping.**

(a) Exposure monitoring.

(i) You must establish and keep an accurate record of all air monitoring for cadmium in the workplace.

(ii) This record must include at least the following information:

(A) The monitoring date, shift, duration, air volume, and results in terms of an 8-hour TWA of each sample taken, and if cadmium is not detected, the detection level;

(B) The name, Social Security number, and job classification of all employees monitored and of all other employees whose exposures the monitoring result is intended to represent, including, where applicable, a description of how it was determined that the employee's monitoring result could be taken to represent other employee's exposures;

(C) A description of the sampling and analytical methods used and evidence of their accuracy;

(D) The type of respiratory protective device, if any, worn by the monitored employee and by any other employee whose exposure the monitoring result is intended to represent;

(E) A notation of any other conditions that might have affected the monitoring results;

(F) Any exposure monitoring or objective data that were used and the levels.

(iii) You must maintain this record for at least 30 years, in accordance with chapter 296-802 WAC.

(iv) You must also provide a copy of the results of an employee's air monitoring prescribed in subsection (4) of this section to an industry trade association and to the employee's union, if any, or, if either of such associations or unions do not exist, to another comparable organization that is competent to maintain such records and is reasonably accessible to employers and employees in the industry.

(b) Objective data for exemption from requirement for initial monitoring.

(i) For purposes of this section, objective data are information demonstrating that a particular product or material containing cadmium or a specific process, operation, or activity involving cadmium cannot release dust or fumes in concentrations at or above the action level even under the worst-case release conditions. Objective data can be obtained from an industry-wide study or from laboratory product test results from manufacturers of cadmium-containing products or materials. The data the employer uses from an industry-wide survey must be obtained under workplace conditions closely resembling the processes, types of material, control methods, work practices, and environmental conditions in the employer's current operations.

(ii) The employer must maintain the record for at least 30 years of the objective data relied upon.

(c) Medical surveillance.

(i) You must establish and maintain an accurate record for each employee covered by medical surveillance under (a)(i) of this subsection.

(ii) The record must include at least the following information about the employee:

(A) Name, Social Security number, and description of duties;

(B) A copy of the physician's written opinions and of the explanation sheets for biological monitoring results;

(C) A copy of the medical history, and the results of any physical examination and all test results that are required to be provided by this section, including biological tests, x-rays, pulmonary function tests, etc., or that have been obtained to further evaluate any condition that might be related to cadmium exposure;

(D) The employee's medical symptoms that might be related to exposure to cadmium; and

(E) A copy of the information provided to the physician as required by subsection (12)(i) of this section.

(iii) You must ensure that this record is maintained for the duration of employment plus 30 years, in accordance with chapter 296-802 WAC.

(iv) At the employee's request, you must promptly provide a copy of the employee's medical record, or update as appropriate, to a medical doctor or a union specified by the employee.

(d) Training. You must certify that employees have been trained by preparing a certification record which includes the identity of the person trained, the signature of the employer or the person who conducted the training, and the date the training was completed. The certification records must be prepared at the completion of training and must be maintained on file for one year beyond the date of training of that employee.

(e) Availability.

(i) Except as otherwise provided for in this section, access to all records required to be maintained by (a) through (d) of this subsection must be in accordance with the provisions of chapter 296-802 WAC.

(ii) Within 15 days after a request, you must make an employee's medical records required to be kept by (c) of this subsection available for examination and copying to the subject employee, to designated representatives, to anyone having the specific written consent of the subject employee, and after the employee's death or incapacitation, to the employee's family members.

(f) Transfer of records. Whenever an employer ceases to do business and there is no successor employer or designated organization to receive and retain records for the prescribed period, you must comply with the requirements concerning transfer of records set forth in chapter 296-802 WAC.

(15) **Observation of monitoring.**

(a) Employee observation. You must provide affected employees or their designated representatives an opportunity to observe any monitoring of employee exposure to cadmium.

(b) Observation procedures. When observation of monitoring requires entry into an area where the use of protective clothing or equipment is required, you must provide the observer with that clothing and equipment and you must ensure that the observer uses such clothing and equipment and complies with all other applicable safety and health procedures.

(16) **Appendices.**

(a) Compliance with the fit testing requirements in WAC 296-842-15005 are mandatory.

(b) Except where portions of WAC 296-62-07441, 296-62-07443, 296-62-07447, 296-62-07449, and 296-62-07451, Appendices A, B, D, E, and F, respectively, to this section are expressly incorporated in requirements of this section, these appendices are purely informational and are not intended to create any additional obligations not otherwise imposed or to detract from any existing obligations.

[Statutory Authority: RCW 49.17.010, .040, .050, and .060. 16-09-085 (Order 15-08), § 296-155-174, filed 04/19/16, effective 05/20/16. Statutory Authority: RCW 49.17.010, .040, .050, and .060. 14-07-086 (Order 13-08), § 296-155-174, filed 03/18/14, effective 05/01/14. Statutory Authority: RCW 49.17.010, .040, .050, and .060. 09-15-145 (Order 09-04), § 296-155-17317, filed 07/21/09, effective 09/01/09. Statutory Authority: RCW 49.17.010, .040, .050, and .060. 07-05-072 (Order 06-39), § 296-155-174, filed 02/20/07, effective 04/01/07. Statutory Authority: RCW 49.17.010, .040, .050, and .060. 05-03-093 (Order 04-41), § 296-155-174, filed 01/18/05, effective 03/01/05. Statutory Authority: RCW 49.17.010, .040, .050 and .060. 04-10-026 (Order 03-04), § 296-155-174, filed 04/27/04, effective 08/01/04. Statutory Authority: RCW 49.17.010, .040, .050. 01-11-038 (Order 99-36), § 296-155-174, filed 05/09/01, effective 09/01/01. Statutory Authority: RCW 49.17.010, .040, .050. 99-10 (Order 98-10), § 296-155-174, filed 05/04/99, effective 09/01/99. Statutory Authority: Chapter 49.17 RCW. 94-15-096 (Order 94-07), § 296-155-174, filed 7/20/94, effective 9/20/94; 93-21-075 (Order 93-06), § 296-155-174, filed 10/20/93, effective 12/1/93; 93-07-044 (Order 93-01), § 296-155-174, filed 3/13/93, effective 4/27/93.]

WAC 296-155-176 Lead.

[Statutory Authority: Chapter 49.17 RCW. 93-22-054 (Order 93-07), § 296-155-176, filed 10/29/93, effective 12/10/93.]

WAC 296-155-17603 Scope.

WAC 296-155-176, Lead, applies to all construction work where an employee may be occupationally exposed to lead. All construction work excluded from coverage in the general industry standard for lead by WAC 296-62-07521 (1)(b) is covered by this standard. Construction work is defined as work for construction, alteration and/or repair, including painting and decorating. It includes but is not limited to the following:

(1) Demolition or salvage of structures where lead or materials containing lead are present;

(2) Removal or encapsulation of materials containing lead;

(3) New construction, alteration, repair, or renovation of structures, substrates, or portions thereof, that contain lead, or materials containing lead;

(4) Installation of products containing lead;

(5) Lead contamination/emergency cleanup;

(6) Transportation, disposal, storage, or containment of lead or materials containing lead on the site or location at which construction activities are performed; and

(7) Maintenance operations associated with the construction activities described in this section.

[Statutory Authority: Chapter 49.17 RCW. 93-22-054 (Order 93-07), § 296-155-17603, filed 10/29/93, effective 12/10/93.]

WAC 296-155-17605 Definitions.

Action level. Employee exposure, without regard to the use of respirators, to an airborne concentration of lead of 30 micrograms per cubic meter of air (30 $\mu g/m^3$) calculated as an 8-hour time-weighted average (TWA).

Competent person. One who is capable of identifying existing and predictable lead hazards in the surroundings or working conditions and who has authorization to take prompt corrective measures to eliminate them.

Director. The director of labor and industries, or designated representative.

Lead. Metallic lead, all inorganic lead compounds, and organic lead soaps. Excluded from this definition are all other organic lead compounds.

This section. WAC 296-155-176 through 296-155-17656.

[Statutory Authority: RCW 49.17.010, .040, .050, and .060. 16-09-085 (Order 15-08), § 296-155-17605, filed 04/19/16, effective 05/20/16. Statutory Authority: Chapter 49.17 RCW. 93-22-054 (Order 93-07), § 296-155-17605, filed 10/29/93, effective 12/10/93.]

WAC 296-155-17607 Permissible exposure limit.

(1) You must ensure that no employee is exposed to lead at concentrations greater than 50 micrograms per cubic meter of air (50 $\mu g/m^3$) averaged over an 8-hour period.

(2) If an employee is exposed to lead for more than 8 hours in any work day the employees' allowable exposure, as a time weighted average (TWA) for that day, must be reduced according to the following formula:

Allowable employee exposure (in $\mu g/m^3$)=400 divided by hours worked in the day.

(3) When respirators are used to limit employee exposure as required by this section and all the requirements of WAC 296-155-17611(1) and 296-155-17613 have been met, employee exposure may be considered to be at the level provided by the protection factor of the respirator for those periods the respirator is worn. Those periods may be averaged with exposure levels during periods when respirators are not worn to determine the employee's daily TWA exposure.

[Statutory Authority: RCW 49.17.010, .040, .050, and .060. 16-09-085 (Order 15-08), § 296-155-17607, filed 04/19/16, effective 05/20/16. Statutory Authority: Chapter 49.17 RCW. 93-22-054 (Order 93-07), § 296-155-17607, filed 10/29/93, effective 12/10/93.]

WAC 296-155-17609 Exposure assessment.

(1) **General.**

(a) Each employer who has a workplace or operation covered by this standard must initially determine if any employee may be exposed to lead at or above the action level.

(b) For the purposes of this section, employee exposure is that exposure which would occur if the employee were not using a respirator.

(c) With the exception of monitoring under subsection (3) of this section, where monitoring is required by this standard, you must collect personal samples representative of a full shift including at least one sample for each job classification in each work area either for each shift or for the shift with the highest exposure level.

(d) Full shift personal samples must be representative of the monitored employee's regular, daily exposure to lead.

(2) **Protection of employees during assessment of exposure.**

(a) With respect to the lead related tasks listed in this subdivision, where lead is present, until the employer performs an employee exposure assessment as required in this section and documents that the employee performing any of the listed tasks is not exposed above the PEL, you must treat the employee as if the employee were exposed above the PEL, and not in excess of 10 times the PEL, and you must implement employee protective measures prescribed in subdivision (e) of this subsection. The tasks covered by this requirement are:

(i) Where lead containing coatings or paint are present: Manual demolition of structures (e.g., dry wall), manual scraping, manual sanding, heat gun applications, and power tool cleaning with dust collection systems;

(ii) Spray painting with lead paint.

(b) In addition, with regard to tasks not listed in subdivision (a), where the employer has any reason to believe that an employee performing the task may be exposed to lead in excess of the PEL, until the employer performs an employee exposure assessment as required by this section and documents that the employee's lead exposure is not above the PEL you must treat the employee as if the employee were exposed above the PEL and must implement employee protective measures as prescribed in subdivision (e) of this subsection.

(c) With respect to the tasks listed in this subdivision, where lead is present, until the employer performs an employee exposure assessment as required in this section, and documents that the employee performing any of the listed tasks is not exposed in excess of 500 $\mu g/m^3$, you must treat the employee as if the employee were exposed to lead in excess of 500 $\mu g/m^3$ and you must implement employee protective measures as prescribed in subdivision (e) of this subsection. Where the employer does establish that the employee is exposed to levels of lead below 500 $\mu g/m^3$, the employer may provide the exposed employee with the appropriate respirator prescribed for such use at such lower exposures, in accordance with Table I of WAC 296-155-17613. The tasks covered by this requirement are:

(i) Using lead containing mortar; lead burning;

(ii) Where lead containing coatings or paint are present: Rivet busting; power tool cleaning without dust collection systems; cleanup activities where dry expendable abrasives are used; and abrasive blasting enclosure movement and removal.

(d) With respect to the tasks listed in this subdivision, where lead is present, until the employer performs an employee exposure assessment as required in this section and documents that the employee performing any of the listed tasks is not exposed to lead in excess of 2,500 $\mu g/m^3$ (50xPEL), you must treat the employee as if the employee were exposed to lead in excess of 2,500 $\mu g/m^3$ and you must implement employee

protective measures as prescribed in (e) of this subsection. Where the employer does establish that the employee is exposed to levels of lead below 2,500 $\mu g/m^3$, the employer may provide the exposed employee with the appropriate respirator prescribed for use at such lower exposures, in accordance with Table I of this WAC 296-155-17613. Protection described in this section is required where lead containing coatings or paint are present on structures when performing:

(i) Abrasive blasting;

(ii) Welding;

(iii) Cutting; and

(iv) Torch burning.

(e) Until the employer performs an employee exposure assessment as required by this section and determines actual employee exposure, you must provide to employees performing the tasks described in (a) through (d) of this subsection with interim protection as follows:

(i) Appropriate respiratory protection in accordance with WAC 296-155-17613.

(ii) Appropriate personal protective clothing and equipment in accordance with WAC 296-155-17615.

(iii) Change areas in accordance with WAC 296-155-17619(2).

(iv) Hand washing facilities in accordance with WAC 296-155-17619(5).

(v) Biological monitoring in accordance with WAC 296-155-17621 (1)(a), to consist of blood sampling and analysis for lead and zinc protoporphyrin levels, and

(vi) Training as required by WAC 296-155-17625 (1)(a) regarding WAC 296-901-140, Hazard communication; training as required by WAC 296-155-17625 (2)(c), regarding use of respirators; and training in accordance with WAC 296-155-100.

(3) **Basis of initial determination.**

(a) Except as provided by (c) and (d) of this subsection you must monitor employee exposures and you must base initial determinations on the employee exposure monitoring results and any of the following, relevant considerations:

(i) Any information, observations, or calculations which would indicate employee exposure to lead;

(ii) Any previous measurements of airborne lead; and

(iii) Any employee complaints of symptoms which may be attributable to exposure to lead.

(b) Monitoring for the initial determination where performed may be limited to a representative sample of the exposed employees who the employer reasonably believes are exposed to the greatest airborne concentrations of lead in the workplace.

(c) Where the employer has previously monitored for lead exposures, and the data were obtained within the past 12 months during work operations conducted under workplace conditions closely resembling the processes, type of material, control methods, work practices, and environmental conditions used and prevailing in the employer's current operations, the employer may rely on such earlier monitoring results to satisfy the requirements of subdivision (a) of this subsection and subsection (5) of this section if the sampling and analytical methods meet the accuracy and confidence levels of subsection (9) of this section.

(d) Where the employer has objective data, demonstrating that a particular product or material containing lead or a specific process, operation or activity involving lead cannot result in employee exposure to lead at or above the action level during processing, use, or handling, the employer may rely upon such data instead of implementing initial monitoring.

(i) You must establish and maintain an accurate record documenting the nature and relevancy of objective data as specified in WAC 296-155-17629(4), where used in assessing employee exposure in lieu of exposure monitoring.

(ii) Objective data, as described in subdivision (d) of this subsection, is not permitted to be used for exposure assessment in connection with subsection (2) of this section.

(4) **Positive initial determination and initial monitoring.**

(a) Where a determination conducted under subsections (1), (2) and (3) of this section shows the possibility of any employee exposure at or above the action level you must conduct monitoring which is representative of the exposure for each employee in the workplace who is exposed to lead.

(b) Where the employer has previously monitored for lead exposure, and the data were obtained within the past 12 months during work operations conducted under workplace conditions closely resembling the processes, type of material, control methods, work practices, and environmental conditions used and prevailing in the employer's current operations, the employer may rely on such earlier monitoring results to satisfy the requirements of (a) of this subsection if the sampling and analytical methods meet the accuracy and confidence levels of subsection (9) of this section.

(5) **Negative initial determination**. Where a determination, conducted under subsections (1), (2), and (3) of this section is made that no employee is exposed to airborne concentrations of lead at or above the action level you must make a written record of such determination. The record must include at least the information specified in subsection (3)(a) of this section and must also include the date of determination, location within the worksite, and the name and Social Security number of each employee monitored.

(6) **Frequency.**

(a) If the initial determination reveals employee exposure to be below the action level further exposure determination need not be repeated except as otherwise provided in subsection (7) of this section.

(b) If the initial determination or subsequent determination reveals employee exposure to be at or above the action level but at or below the PEL you must perform monitoring in accordance with this section at least every 6 months. You must continue monitoring at the required frequency until at least two consecutive measurements, taken at least 7 days apart, are below the action level at which time the employer may discontinue monitoring for that employee except as otherwise provided in subsection (7) of this section.

(c) If the initial determination reveals that employee exposure is above the PEL you must perform monitoring quarterly. You must continue monitoring at the required frequency until at least two consecutive measurements, taken at least 7 days apart, are at or below the PEL but at or above the action level at which time the employer must repeat monitoring for that employee at the frequency specified in subdivision (b) of this subsection, except as otherwise provided in subsection (7) of this section. You must continue monitoring at the required frequency until at least two consecutive measurements, taken at least 7 days apart, are below the action level at which time the employer may discontinue monitoring for that employee except as otherwise provided in subsection (7) of this section.

(7) **Additional exposure assessments**. Whenever there has been a change of equipment, process, control, personnel or a new task has been initiated that may result in additional employees being exposed to lead at or above the action level or may result in employees already exposed at or above the action level being exposed above the PEL, you must conduct additional monitoring in accordance with this section.

(8) **Employee notification.**

(a) Within 5 working days after completion of the exposure assessment you must notify each employee in writing of the results which represent that employee's exposure.

(b) Whenever the results indicate that the representative employee exposure, without regard to respirators, is at or above the PEL you must include in the written notice a statement that the employees exposure was at or above that level and a description of the corrective action taken or to be taken to reduce exposure to below that level.

(9) **Accuracy of measurement**. You must use a method of monitoring and analysis which has an accuracy (to a confidence level of 95%) of not less than plus or minus 25% for airborne concentrations of lead equal to or greater than 30 $\mu g/m^3$.

[Statutory Authority: RCW 49.17.010, .040, .050, and .060. 16-09-085 (Order 15-08), § 296-155-17609, filed 04/19/16, effective 05/20/16. Statutory Authority: RCW 49.17.010, .040, .050, and .060. 16-09-085 (Order 15-08), § 296-155-17609, filed 04/19/16, effective 05/20/16. Statutory Authority: RCW 49.17.010, .040, .050, and .060. 14-07-086 (Order 13-08), § 296-155-17609, filed 03/18/14, effective 05/01/14. Statutory Authority: RCW 49.17.010, .040, .050. 01-11-038 (Order 99-36), § 296-155-17609, filed 05/09/01, effective 09/01/01. Statutory Authority: Chapter 49.17 RCW. 93-22-054 (Order 93-07), § 296-155-17609, filed 10/29/93, effective 12/10/93.]

WAC 296-155-17611 Methods of compliance.

(1) **Engineering and work practice controls**. You must implement engineering and work practice controls, including administrative controls, to reduce and maintain employee exposure to lead to or below the permissible exposure limit to the extent that such controls are feasible. Wherever all feasible engineering and work practices controls that can be instituted are not sufficient to reduce employee exposure to or below the permissible exposure limit prescribed in WAC 296-155-17607, you must nonetheless use them to reduce employee exposure to the lowest feasible level and you must supplement them by the use of respiratory protection that complies with the requirements of WAC 296-155-17613.

(2) **Compliance program.**

(a) Prior to commencement of the job you must establish and implement a written compliance program to achieve compliance with WAC 296-155-17607.

(b) Written plans for these compliance programs must include at least the following:

(i) A description of each activity in which lead is emitted; e.g., equipment used, material involved, controls in place, crew size, employee job responsibilities, operating procedures and maintenance practices;

(ii) A description of the specific means that will be employed to achieve compliance and, where engineering controls are required engineering plans and studies used to determine methods selected for controlling exposure to lead;

(iii) A report of the technology considered in meeting the PEL;

(iv) Air monitoring data which documents the source of lead emissions;

(v) A detailed schedule for implementation of the program, including documentation such as copies of purchase orders for equipment, construction contracts, etc.;

(vi) A work practice program which includes under requirements in WAC 296-155-17615, 296-155-17617, and 296-155-17619, and incorporates other relevant work practices such as those specified in subsection (5) of this section;

(vii) An administrative control schedule required by subsection (4) of this section, if applicable;

(viii) Other relevant information.

(c) The compliance program must provide for frequent and regular inspections of job sites, materials, and equipment to be made by a competent person.

(d) You must submit written programs upon request to any affected employee or authorized employee representatives, and the director, and you must make them available at the worksite for examination and copying by the director.

(e) You must revise and update written programs at least every 6 months to reflect the current status of the program.

(3) **Mechanical ventilation**. When ventilation is used to control lead exposure, you must evaluate the mechanical performance of the system in controlling exposure as necessary to maintain its effectiveness.

(4) **Administrative controls**. If administrative controls are used as a means of reducing employees TWA exposure to lead, you must establish and implement a job rotation schedule which includes:

(a) Name or identification number of each affected employee;

(b) Duration and exposure levels at each job or work station where each affected employee is located; and

(c) Any other information which may be useful in assessing the reliability of administrative controls to reduce exposure to lead.

(5) You must ensure that, to the extent relevant, employees follow good work practices such as described in Appendix B, WAC 296-155-17652.

[Statutory Authority: RCW 49.17.010, .040, .050, and .060. 16-09-085 (Order 15-08), § 296-155-17611, filed 04/19/16, effective 05/20/16. Statutory Authority: Chapter 49.17 RCW. 93-22-054 (Order 93-07), § 296-155-17611, filed 10/29/93, effective 12/10/93.]

WAC 296-155-17613 Respiratory protection.

(1) **General**. For employees who use respirators required by WAC 296-155-176, you must provide each employee with an appropriate respirator that complies with the requirements of this section. Respirators must be used during:

(a) Periods when an employee's exposure to lead exceeds the PEL.

(b) Work operations for which engineering controls and work-practices are not sufficient to reduce employee exposures to or below the PEL.

(c) Periods when an employee requests a respirator.

(d) Periods when respirators are required to provide interim protection of employees while they perform the operations as specified in WAC 296-155-17609(2).

(2) **Respirator program.**

(a) You must develop, implement and maintain a respiratory protection program as required by chapter 296-842 WAC, Respirators, which covers each employee required by this chapter to use a respirator.

(b) If an employee has breathing difficulty during fit testing or respirator use, you must provide the employee with a medical examination as required by WAC 296-155-17621(3)(a)(ii) to determine whether or not the employee can use a respirator while performing the required duty.

(3) **Respirator selection**. You must:

(a) Select and provide for employees appropriate respirators according to this section and WAC 296-842-13005 in the respirator rule.

(b) Provide employees with a powered air-purifying respirator (PAPR) when an employee chooses to use a PAPR and it provides adequate protection to the employee.

(c) Provide employees with full facepiece respirators instead of half facepiece respirators for protection against lead aerosols that may cause skin irritation at the use concentration.

(d) Provide HEPA filters or N-, R-, or P-100 filters for powered air-purifying respirators (PAPRs) and negative-pressure air-purifying respirators.

[Statutory Authority: RCW 49.17.010, .040, .050, and .060. 16-09-085 (Order 15-08), § 296-155-17613, filed 04/19/16, effective 05/20/16. Statutory Authority: RCW 49.17.010, .040, .050, and .060. 09-15-145 (Order 09-04), § 296-155-17613, filed 07/21/09, effective 09/01/09. Statutory Authority: RCW 49.17.010, .040, .050, and .060. 07-05-072 (Order 06-39), § 296-155-17613, filed 02/20/07, effective 04/01/07. Statutory Authority: RCW 49.17.010, .040, .050, and .060. 05-03-093 (Order 04-41), § 296-155-17613, filed 01/18/05, effective 03/01/05. Statutory Authority: RCW 49.17.010, .040, .050. 99-10 (Order 98-10), § 296-155-17613, filed 05/04/99, effective 09/01/99. Statutory Authority: Chapter 49.17 RCW. 93-22-054 (Order 93-07), § 296-155-17613, filed 10/29/93, effective 12/10/93.]

WAC 296-155-17615 Protective work clothing and equipment.

(1) **Provision and use**. Where an employee is exposed to lead above the PEL without regard to the use of respirators, where employees are exposed to lead compounds which may cause skin or eye irritation (e.g., lead arsenate, lead azide), and as protection for employees performing tasks as specified in WAC 296-155-17609(2), you must provide at no cost to the employee and ensure that the employee uses appropriate protective work clothing and equipment that prevents contamination of the employee and the employee's garments such as, but not limited to:

(a) Coveralls or similar full-body work clothing;

(b) Gloves, hats, and shoes or disposable shoe coverlets; and

(c) Face shields, vented goggles, or other appropriate protective equipment which complies with WAC 296-800-160.

(2) **Cleaning and replacement.**

(a) You must provide the protective clothing required in subsection (1) of this section in a clean and dry condition at least weekly, and daily to employees whose exposure levels without regard to a respirator are over 200 $\mu g/m^3$ of lead as an 8-hour TWA.

(b) You must provide for the cleaning, laundering, and disposal of protective clothing and equipment required by subsection (1) of this section.

(c) You must repair or replace required protective clothing and equipment as needed to maintain their effectiveness.

(d) You must ensure that all protective clothing is removed at the completion of a work shift only in change areas provided for that purpose as prescribed in WAC 296-155-17619(2).

(e) You must ensure that contaminated protective clothing which is to be cleaned, laundered, or disposed of, is placed in a closed container in the change area which prevents dispersion of lead outside the container.

(f) You must inform in writing any person who cleans or launders protective clothing or equipment of the potentially harmful effects of exposure to lead.

(g) You must ensure that the containers of contaminated protective clothing and equipment required by under (e) of this subsection are labeled as follows:

**DANGER: CLOTHING AND EQUIPMENT CONTAMINATED WITH LEAD.
MAY CAUSE FERTILITY OR THE UNBORD CHILD.
CAUSES DAMAGE TO THE CENTRAL NERVOUS SYSTEM.
DO NOT EAT, DRINK OR SMOKE WHEN HANDLING.
DO NOT REMOVE DUST BY BLOWING OR SHAKING.
DISPOSE OF LEAD CONTAMINATED WASH WATER IN ACCORDANCE WITH APPLICABLE LOCAL, STATE, OR FEDERAL REGULATIONS.**

(h) Prior to June 1, 2015, you may include the following information on bags or containers of contaminated protective clothing and equipment required under (e) of this subsection in lieu of the labeling requirements stated above in this section:

**CAUTION CLOTHING CONTAMINATED WITH LEAD. DO NOT REMOVE DUST BY BLOWING OR SHAKING.
DISPOSE OF LEAD CONTAMINATED WASH WATER IN ACCORDANCE WITH APPLICABLE LOCAL, STATE, OR FEDERAL REGULATIONS.**

(i) You must prohibit the removal of lead from protective clothing or equipment by blowing, shaking, or any other means which disperses lead into the air.

[Statutory Authority: RCW 49.17.010, .040, .050, and .060. 16-09-085 (Order 15-08), § 296-155-17657, filed 04/19/16, effective 05/20/16. Statutory Authority: RCW 49.17.010, .040, .050, and .060. 14-07-086 (Order 13-08), § 296-155-17615, filed 03/18/14, effective 05/01/14. Statutory Authority: RCW 49.17.010, .040, .050. 01-11-038 (Order 99-36), § 296-155-17615, filed 05/09/01, effective 09/01/01. Statutory Authority: Chapter 49.17 RCW. 93-22-054 (Order 93-07), § 296-155-17615, filed 10/29/93, effective 12/10/93.]

WAC 296-155-17617 Housekeeping.

(1) You must maintain all surfaces as free as practicable of accumulations of lead.

(2) You must perform clean-up of floors and other surfaces where lead accumulates, wherever possible, by vacuuming or other methods that minimize the likelihood of lead becoming airborne.

(3) Shoveling, dry or wet sweeping, and brushing may be used only where vacuuming or other equally effective methods have been tried and found not to be effective.

(4) Where vacuuming methods are selected, the vacuums must be equipped with HEPA filters and used and emptied in a manner which minimizes the reentry of lead into the workplace.

(5) You must not use compressed air to remove lead from any surface unless the compressed air is used in conjunction with a ventilation system designed to capture the airborne dust created by the compressed air.

[Statutory Authority: RCW 49.17.010, .040, .050, and .060. 16-09-085 (Order 15-08), § 296-155-17605, filed 04/19/16, effective 05/20/16. Statutory Authority: Chapter 49.17 RCW. 93-22-054 (Order 93-07), § 296-155-17617, filed 10/29/93, effective 12/10/93.]

WAC 296-155-17619 Hygiene facilities and practices.

(1) You must ensure that in areas where employees are exposed to lead above the PEL without regard to the use of respirators, food or beverage is not present or consumed, tobacco products are not present or used, and cosmetics are not applied.

(2) **Change areas.**

(a) You must provide clean change areas for employees whose airborne exposure to lead is above the PEL, and as protection for employees performing tasks as specified in WAC 296-155-17609(2), without regard to the use of respirators.

(b) You must ensure that change areas are equipped with separate storage facilities for protective work clothing and equipment and for street clothes which prevent cross-contamination.

(c) You must ensure that employees do not leave the workplace wearing any protective clothing or equipment that is required to be worn during the work shift.

(3) **Showers.**

(a) You must provide shower facilities, where feasible, for use by employees whose airborne exposure to lead is above the PEL.

(b) You must ensure, where shower facilities are available, that employees shower at the end of the work shift and you must provide an adequate supply of cleansing agents and towels for use by affected employees.

(4) **Eating facilities.**

(a) You must provide lunchroom facilities or eating areas for employees whose airborne exposure to lead is above the PEL, without regard to the use of respirators.

(b) You must ensure that lunchroom facilities or eating areas are as free as practicable from lead contamination and are readily accessible to employees.

(c) You must ensure that employees whose airborne exposure to lead is above the PEL, without regard to the use of a respirator, wash their hands and face prior to eating, drinking, smoking or applying cosmetics.

(d) You must ensure that employees do not enter lunchroom facilities or eating areas with protective work clothing or equipment unless surface lead dust has been removed by vacuuming, downdraft booth, or other cleaning method that limits dispersion of lead dust.

(5) **Handwashing facilities.**

(a) You must provide adequate handwashing facilities for use by employees exposed to lead in accordance with WAC 296-155-140.

(b) Where showers are not provided you must ensure that employees wash their hands and face at the end of the work shift.

[Statutory Authority: RCW 49.17.010, .040, .050, and .060. 16-09-085 (Order 15-08), § 296-155-17619, filed 04/19/16, effective 05/20/16. Statutory Authority: Chapter 49.17 RCW. 93-22-054 (Order 93-07), § 296-155-17619, filed 10/29/93, effective 12/10/93.]

WAC 296-155-17621 Medical surveillance.

(1) **General.**

(a) You must make available initial medical surveillance to employees occupationally exposed on any day to lead at or above the action level. Initial medical surveillance consists of biological monitoring in the form of blood sampling and analysis for lead and zinc protoporphyrin levels.

(b) You must institute a medical surveillance program in accordance with subsections (2) and (3) of this section for all employees who are or may be exposed by the employer at or above the action level for more than 30 days in any consecutive 12 months;

(c) You must ensure that all medical examinations and procedures are performed by or under the supervision of a licensed physician.

(d) You must make available the required medical surveillance including multiple physician review under subsection (3)(c) without cost to employees and at a reasonable time and place.

(2) **Biological monitoring.**

(a) Blood lead and ZPP level sampling and analysis. You must make available biological monitoring in the form of blood sampling and analysis for lead and zinc protoporphyrin levels to each employee covered by subsection (1)(a) and (b) of this section on the following schedule:

(i) For each employee covered by subsection (1)(b) of this section, at least every two months for the first 6 months and every 6 months thereafter;

(ii) For each employee covered by subsection (1)(a) or (b) of this section whose last blood sampling and analysis indicated a blood lead level at or above 40 μg/dl, at least every two months. This frequency must continue until two consecutive blood samples and analyses indicate a blood lead level below 40 μg/dl; and

(iii) For each employee who is removed from exposure to lead due to an elevated blood lead level at least monthly during the removal period.

(b) Follow-up blood sampling tests. Whenever the results of a blood lead level test indicate that an employee's blood lead level is at or above the numerical criterion for medical removal under WAC 296-155-17623 (1)(a), you must provide a second (follow-up) blood sampling test within two weeks after the employer receives the results of the first blood sampling test.

(c) Accuracy of blood lead level sampling and analysis. Blood lead level sampling and analysis provided pursuant to this WAC 296-155-176 must have an accuracy (to a confidence level of 95% within plus or minus 15% percent or 6 μg/dl, whichever is greater, and must be conducted by a laboratory approved by OSHA.

(d) Employee notification.

(i) Within 5 working days after the receipt of biological monitoring results, you must notify each employee in writing of their blood lead level; and

(ii) You must notify each employee whose blood lead level is at or above 40 μg/dl that the standard requires temporary medical removal with Medical Removal Protection benefits when an employee's blood lead level is at or above the numerical criterion for medical removal under WAC 296-155-17623(1)(a).

(3) **Medical examinations and consultations.**

(a) Frequency. You must make available medical examinations and consultations to each employee covered by subsection (1)(b) of this section on the following schedule:

(i) At least annually for each employee for whom a blood sampling test conducted at any time during the preceding 12 months indicated a blood lead level at or above 40 μg/dl;

(ii) As soon as possible, upon notification by an employee either that the employee has developed signs or symptoms commonly associated with lead intoxication, that the employee desires medical advice concerning the effects of current or past exposure to lead on the employee's ability to procreate a healthy child, that the employee is pregnant, or that the employee has demonstrated difficulty in breathing during a respirator fitting test or during use; and

(iii) As medically appropriate for each employee either removed from exposure to lead due to a risk of sustaining material impairment to health, or otherwise limited pursuant to a final medical determination.

(b) Content. The content of medical examinations made available pursuant to subdivision (a)(ii) and (iii) of this subsection must be determined by an examining physician and, if requested by an employee, must include pregnancy testing or laboratory evaluation of male fertility. Medical examinations made available pursuant to subdivision (a)(i) of this subsection must include the following elements:

(i) A detailed work history and a medical history, with particular attention to past lead exposure (occupational and non-occupational), personal habits (smoking, hygiene), and past gastrointestinal, hematologic, renal, cardiovascular, reproductive and neurological problems;

(ii) A thorough physical examination, with particular attention to teeth, gums, hematologic, gastrointestinal, renal, cardiovascular, and neurological systems. Pulmonary status should be evaluated if respiratory protection will be used;

(iii) A blood pressure measurement;

(iv) A blood sample and analysis which determines:

(A) Blood lead level;

(B) Hemoglobin and hematocrit determinations, red cell indices, and examination of peripheral smear morphology;

(C) Zinc protoporphyrin;

(D) Blood urea nitrogen; and,

(E) Serum creatinine;

(v) A routine urinalysis with microscopic examination; and

(vi) Any laboratory or other test relevant to lead exposure which the examining physician deems necessary by sound medical practice.

(c) Multiple physician review mechanism.

(i) If the employer selects the initial physician who conducts any medical examination or consultation provided to an employee by WAC 296-155-176, the employee may designate a second physician:

(A) To review any findings, determinations or recommendations of the initial physician; and

(B) To conduct such examinations, consultations, and laboratory tests as the second physician deems necessary to facilitate this review.

(ii) You must promptly notify an employee of the right to seek a second medical opinion after each occasion that an initial physician conducts a medical examination or consultation pursuant to WAC 296-155-176. You may condition its participation in, and payment for, the multiple physician review mechanism upon the employee doing the following within 15 days after receipt of the foregoing notification, or receipt of the initial physician's written opinion, whichever is later:

(A) The employee informing the employer that they intend to seek a second medical opinion; and

(B) The employee initiating steps to make an appointment with a second physician.

(iii) If the findings, determinations or recommendations of the second physician differ from those of the initial physician, then the employer and the employee must ensure that efforts are made for the two physicians to resolve any disagreement.

(iv) If the two physicians have been unable to quickly resolve their disagreement, then the employer and the employee through their respective physicians must designate a third physician:

(A) To review any findings, determinations or recommendations of the prior physicians; and

(B) To conduct such examinations, consultations, laboratory tests and discussions with the prior physicians as the third physician deems necessary to resolve the disagreement of the prior physicians.

(v) You must act consistent with the findings, determinations and recommendations of the third physician, unless the employer and the employee reach an agreement which is otherwise consistent with the recommendations of at least one of the three physicians.

(d) Information provided to examining and consulting physicians.

(i) You must provide an initial physician conducting a medical examination or consultation under WAC 296-155-176 with the following information:

(A) A copy of this regulation for lead including all Appendices;

(B) A description of the affected employee's duties as they relate to the employee's exposure;

(C) The employee's exposure level or anticipated exposure level to lead and to any other toxic substance (if applicable);

(D) A description of any personal protective equipment used or to be used;

(E) Prior blood lead determinations; and

(F) All prior written medical opinions concerning the employee in the employer's possession or control.

(ii) You must provide the foregoing information to a second or third physician conducting a medical examination or consultation under WAC 296-155-176 upon request either by the second or third physician, or by the employee.

(e) Written medical opinions.

(i) You must obtain and furnish the employee with a copy of a written medical opinion from each examining or consulting physician which contains only the following information:

(A) The physician's opinion as to whether the employee has any detected medical condition which would place the employee at increased risk of material impairment of the employee's health from exposure to lead;

(B) Any recommended special protective measures to be provided to the employee, or limitations to be placed upon the employee's exposure to lead;

(C) Any recommended limitation upon the employee's use of respirators, including a determination of whether the employee can wear a powered air purifying respirator if a physician determines that the employee cannot wear a negative pressure respirator; and

(D) The results of the blood lead determinations.

(ii) You must instruct each examining and consulting physician to:

(A) Not reveal either in the written opinion or orally, or in any other means of communication with the employer, findings, including laboratory results, or diagnoses unrelated to an employee's occupational exposure to lead; and

(B) Advise the employee of any medical condition, occupational or nonoccupational, which dictates further medical examination or treatment.

(f) Alternate physician determination mechanisms. The employer and an employee or authorized employee representative may agree upon the use of any alternate physician determination mechanism in lieu of the multiple physician review mechanism provided by subdivision (c) of this subsection so long as the alternate mechanism is as expeditious and protective as the requirements contained in this section.

(4) **Chelation.**

(a) You must ensure that any person whom he retains, employs, supervises or controls does not engage in prophylactic chelation of any employee at any time.

(b) If therapeutic or diagnostic chelation is to be performed by any person in subdivision (a) of this subsection, you must ensure that it be done under the supervision of a licensed physician in a clinical setting with thorough and appropriate medical monitoring and that the employee is notified in writing prior to its occurrence.

[Statutory Authority: RCW 49.17.010, .040, .050, and .060. 16-09-085 (Order 15-08), § 296-155-17621, filed 04/19/16, effective 05/20/16. Statutory Authority: RCW 49.17.010, .040, .050, and .060. 12-24-071 (Order 12-20), § 296-155-17621, filed 12/04/12, effective 01/04/13. Statutory Authority: Chapter 49.17 RCW. 93-22-054 (Order 93-07), § 296-155-17621, filed 10/29/93, effective 12/10/93.]

WAC 296-155-17623 Medical removal protection.

(1) **Temporary medical removal and return of an employee.**

(a) Temporary removal due to elevated blood lead level. You must remove an employee from work having an exposure to lead at or above the action level on each occasion that a periodic and a follow-up blood sampling test conducted pursuant to WAC 296-155-176 indicate that the employee's blood lead level is at or above 50 μg/dl; and

(b) Temporary removal due to a final medical determination.

(i) You must remove an employee from work having an exposure to lead at or above the action level on each occasion that a final medical determination results in a medical finding, determination, or opinion that the employee has a detected medical condition which places the employee at increased risk of material impairment to health from exposure to lead.

(ii) For the purposes of WAC 296-155-176, the phrase **"final medical determination"** means the written medical opinion on the employees' health status by the examining physician or, where relevant, the outcome of the multiple physician review mechanism or alternate medical determination mechanism used pursuant to the medical surveillance provisions of WAC 296-155-176.

(iii) Where a final medical determination results in any recommended special protective measures for an employee, or limitations on an employee's exposure to lead, you must implement and act consistent with the recommendation.

(c) Return of the employee to former job status.

(i) You must return an employee to their former job status:

(A) For an employee removed due to a blood lead level at or above 50 μg/dl when two consecutive blood sampling tests indicate that the employee's blood lead level is below 40 μg/dl;

(B) For an employee removed due to a final medical determination, when a subsequent final medical determination results in a medical finding, determination, or opinion that the employee no longer has a detected medical condition which places the employee at increased risk of material impairment to health from exposure to lead.

(ii) For the purposes of WAC 296-155-176, the requirement that an employer return an employee to their former job status is not intended to expand upon or restrict any rights an employee has or would have had, absent temporary medical removal, to a specific job classification or position under the terms of a collective bargaining agreement.

(d) Removal of other employee special protective measure or limitations. You must remove any limitations placed on an employee or end any special protective measures provided to an employee pursuant to a final medical determination when a subsequent final medical determination indicates that the limitations or special protective measures are no longer necessary.

(e) Employer options pending a final medical determination. Where the multiple physician review mechanism, or alternate medical determination mechanism used pursuant to the medical surveillance provisions of WAC 296-155-176, has not yet resulted in a final medical determination with respect to an employee, you must act as follows:

(i) Removal. You may remove the employee from exposure to lead, provide special protective measures to the employee, or place limitations upon the employee, consistent with the medical findings, determinations, or recommendations of any of the physicians who have reviewed the employee's health status.

(ii) Return. You may return the employee to their former job status, end any special protective measures provided to the employee, and remove any limitations placed upon the employee, consistent with the medical findings, determinations, or recommendations of any of the physicians who have reviewed the employee's health status, with two exceptions.

(A) If the initial removal, special protection, or limitation of the employee resulted from a final medical determination which differed from the findings, determinations, or recommendations of the initial physician or;

(B) If the employee has been on removal status for the preceding 18 months due to an elevated blood lead level, then you must await a final medical determination.

(2) **Medical removal protection benefits.**

(a) Provision of medical removal protection benefits. You must provide an employee up to 18 months of medical removal protection benefits on each occasion that an employee is removed from exposure to lead or otherwise limited pursuant to WAC 296-155-176.

(b) Definition of medical removal protection benefits. For the purposes of WAC 296-155-176, the requirement that an employer provide medical removal protection benefit**s** means that, as long as the job the employee was removed from continues, you must maintain the total normal earnings, seniority and other employment rights and benefits of an employee, including the employee's right to their former job status as though the employee had not been medically removed from the employee's job or otherwise medically limited.

(c) Follow-up medical surveillance during the period of employee removal or limitation. During the period of time that an employee is medically removed from their job or otherwise medically limited, you may condition the provision of medical removal protection benefits upon the employee's participation in follow-up medical surveillance made available pursuant to WAC 296-155-176.

(d) Workers' compensation claims. If a removed employee files a claim for workers' compensation payments for a lead-related disability, then you must continue to provide medical removal protection benefits pending disposition of the claim. To the extent that an award is made to the employee for earnings lost during the period of removal, the employer's medical removal protection obligation must be reduced by such amount. You must receive no credit for workers' compensation payments received by the employee for treatment-related expenses.

(e) Other credits. The employer's obligation to provide medical removal protection benefits to a removed employee must be reduced to the extent that the employee receives compensation for earnings lost during the period of removal either from a publicly or employer-funded compensation program, or receives income from employment with another employer made possible by virtue of the employee's removal.

(f) Voluntary removal or restriction of an employee. Where an employer, although not required by WAC 296-155-176 to do so, removes an employee from exposure to lead or otherwise places limitations on an employee due to the effects of lead exposure on the employee's medical condition, you must provide medical removal protection benefits to the employee equal to that required by subdivisions (a) and (b) of this subsection.

[Statutory Authority: RCW 49.17.010, .040, .050, and .060. 16-09-085 (Order 15-08), § 296-155-17623, filed 04/19/16, effective 05/20/16. Statutory Authority: RCW 49.17.010, .040, .050, and .060. 12-24-071 (Order 12-20), § 296-155-17623, filed 12/04/12, effective 01/04/13. Statutory Authority: Chapter 49.17 RCW. 93-22-054 (Order 93-07), § 296-155-17623, filed 10/29/93, effective 12/10/93.]

WAC 296-155-17625 Communication of hazards.

(1) **General.**

(a) Hazard communication. You must include lead in the program established to comply with the Hazard Communication Standard (HCS), WAC 296-901-140. You must ensure that each employee has access to labels on containers of lead and safety data sheets and is trained in accordance with the provisions of HSC and subsection (1) of this section. You must ensure that at least the following hazards are addressed:

(i) Reproductive/developmental toxicity;

(ii) Central nervous system effects;

(iii) Kidney effects;

(iv) Blood effects; and

(v) Acute toxicity effects.

(b) You must train each employee who is subject to exposure to lead at or above the action level on any day or who is subject to exposure to lead compounds which may cause skin or eye irritation (e.g., lead arsenate, lead azide), in accordance with the requirements of this chapter. You must institute a training program in accordance with subsection (2) of this section and ensure employee participation.

(c) You must provide the training program as initial training prior to the time of job assignment or prior to the startup date for this requirement, whichever comes last.

(d) You must also provide the training program at least annually for each employee who is subject to lead exposure at or above the action level on any day.

(2) **Training program**. You must assure that each employee is trained in the following:

(a) The content of this standard and its appendices;

(b) The specific nature of the operations which could result in exposure to lead above the action level;

(c) The training requirements for respiratory protection as required by (WAC 296-842-110, 296-842-19005, and WAC 296-842-16005);

(d) The purpose and a description of the medical surveillance program, and the medical removal protection program including information concerning the adverse health effects associated with excessive exposure to lead (with particular attention to the adverse reproductive effects on both males and females and hazards to the fetus and additional precautions for employees who are pregnant);

(e) The engineering controls and work practices associated with the employee's job assignment including training of employees to follow relevant good work practices described in Appendix B, WAC 296-155-17652;

(f) The contents of any compliance plan in effect;

(g) Instructions to employees that chelating agents should not routinely be used to remove lead from their bodies and should not be used at all except under the direction of a licensed physician; and

(h) The employee's right of access to records under Part B, chapter 296-62 WAC and chapter 296-800 WAC.

(3) **Access to information and training materials.**

(a) You must make readily available to all affected employees a copy of this standard and its appendices.

(b) You must provide, upon request, all materials relating to the employee information and training program to affected employees and their designated representatives, and the director.

[Statutory Authority: RCW 49.17.010, .040, .050, and .060. 16-09-085 (Order 15-08), § 296-155-17625, filed 04/19/16, effective 05/20/16. Statutory Authority: RCW 49.17.010, .040, .050, and .060. 14-07-086 (Order 13-08), § 296-155-17625, filed 03/18/14, effective 05/01/14. Statutory Authority: RCW 49.17.010, .040, .050, and .060. 09-15-145 (Order 09-04), § 296-155-17317, filed 07/21/09, effective 09/01/09. Statutory Authority: RCW 49.17.010, .040, .050, and .060. 05-03-093 (Order 04-41), § 296-155-17625, filed 01/18/05, effective 03/01/05. Statutory Authority: RCW 49.17.010, .040, .050. 01-11-038 (Order 99-36), § 296-155-17625, filed 05/09/01, effective 09/01/01. Statutory Authority: RCW 49.17.010, .040, .050. 99-10 (Order 98-10), § 296-155-17625, filed 05/04/99, effective 09/01/99. Statutory Authority: Chapter 49.17 RCW. 93-22-054 (Order 93-07), § 296-155-17625, filed 10/29/93, effective 12/10/93.]

WAC 296-155-17627 Signs - General.

(1) You must post the following warning signs in each work area where an employee's exposure to lead is above the PEL.

DANGER LEAD WORK AREA
MAY DAMAGE FERTILITY OR THE UNBORN CHILD
CAUSES DAMAGE TO THE CENTRAL NERVOUS SYSTEM
DO NOT EAT, DRINK, OR SMOKE IN THIS AREA

(2) You must ensure that no statement appears on or near any sign required by this section which contradicts or detracts from the meaning of the required sign.

(3) You must ensure that signs required by this section are illuminated and cleaned as necessary so that the legend is readily visible.

(4) You may use signs required by other statutes, regulations or ordinances in addition to, or in combination with, signs required by this section.

(5) Prior to June 1, 2016, you may use the following legend in lieu of that specified in subsection (1) of this section:

WARNING
LEAD WORK AREA
POISON
NO SMOKING OR EATING

[Statutory Authority: RCW 49.17.010, .040, .050, and .060. 16-09-085 (Order 15-08), § 296-155-17627, filed 04/19/16, effective 05/20/16. Statutory Authority: RCW 49.17.010, .040, .050, and .060. 14-07-086 (Order 13-08), § 296-155-17627, filed 03/18/14, effective 05/01/14. Statutory Authority: Chapter 49.17 RCW. 93-22-054 (Order 93-07), § 296-155-17627, filed 10/29/93, effective 12/10/93.]

WAC 296-155-17629 Recordkeeping.

(1) **Exposure assessment.**

(a) You must establish and maintain an accurate record of all monitoring and other data used in conducting employee exposure assessments as required in WAC 296-155-17609.

(b) Exposure monitoring records must include:

(i) The date(s), number, duration, location and results of each of the samples taken if any, including a description of the sampling procedure used to determine representative employee exposure where applicable;

(ii) A description of the sampling and analytical methods used and evidence of their accuracy;

(iii) The type of respiratory protective devices worn, if any;

(iv) Name, Social Security number, and job classification of the employee monitored and of all other employees whose exposure the measurement is intended to represent; and

(v) The environmental variables that could affect the measurement of employee exposure.

(c) You must maintain monitoring and other exposure assessment records in accordance with the provisions of part B, chapter 296-62 WAC.

(2) **Medical surveillance.**

(a) You must establish and maintain an accurate record for each employee subject to medical surveillance as required by WAC 296-155-17621.

(b) This record must include:

(i) The name, Social Security number, and description of the duties of the employee;

(ii) A copy of the physician's written opinions;

(iii) Results of any airborne exposure monitoring done on or for that employee and provided to the physician; and

(iv) Any employee medical complaints related to exposure to lead.

(c) You must keep, or assure that the examining physician keeps, the following medical records:

(i) A copy of the medical examination results including medical and work history required by WAC 296-155-17621;

(ii) A description of the laboratory procedures and a copy of any standards or guidelines used to interpret the test results or references to that information;

(iii) A copy of the results of biological monitoring.

(d) You must maintain or assure that the physician maintains medical records in accordance with the provisions of part B, chapter 296-62 WAC.

(3) **Medical removals.**

(a) You must establish and maintain an accurate record for each employee removed from current exposure to lead pursuant to WAC 296-155-17623.

(b) Each record must include:

(i) The name and Social Security number of the employee;

(ii) The date of each occasion that the employee was removed from current exposure to lead as well as the corresponding date on which the employee was returned to their former job status;

(iii) A brief explanation of how each removal was or is being accomplished; and

(iv) A statement with respect to each removal indicating whether or not the reason for the removal was an elevated blood lead level.

(c) The employer must maintain each medical removal record for at least the duration of an employee's employment.

(4) **Objective data for exemption from requirement for initial monitoring.**

(a) For purposes of WAC 296-155-176, objective data are information demonstrating that a particular product or material containing lead or a specific process, operation, or activity involving lead cannot release dust or fumes in concentrations at or above the action level under any expected conditions of use. Objective data can be obtained from an industry-wide study or from laboratory product test results from manufacturers of lead containing products or materials. The data the employer uses from an industry-wide survey must be obtained under workplace conditions closely resembling the processes, types of material, control methods, work practices and environmental conditions in the employer's current operations.

(b) You must maintain the record of the objective data relied upon for at least 30 years.

(5) **Availability**. You must make available upon request all records required to be maintained by this section to affected employees, former employees, and their designated representatives, and to the director for examination and copying.

(6) **Transfer of records**. You must comply with requirements involving the transfer of records set forth in WAC 296-802-60005.

[Statutory Authority: RCW 49.17.010, .040, .050, and .060. 16-09-085 (Order 15-08), § 296-155-17629, filed 04/19/16, effective 05/20/16. Statutory Authority: RCW 49.17.010, .040, .050, and .060. 12-24-071 (Order 12-20), § 296-155-17629, filed 12/04/12, effective 01/04/13. Statutory Authority: Chapter 49.17 RCW. 93-22-054 (Order 93-07), § 296-155-17629, filed 10/29/93, effective 12/10/93.]

WAC 296-155-17631 Observation of monitoring.

(1) **Employee observation**. You must provide affected employees or their designated representatives an opportunity to observe any monitoring of employee exposure to lead conducted pursuant to WAC 296-155-17609.

(2) **Observation procedures.**

(a) Whenever observation of the monitoring of employee exposure to lead requires entry into an area where the use of respirators, protective clothing or equipment is required, you must provide the observer with and assure the use of such respirators, clothing and equipment, and you must require the observer to comply with all other applicable safety and health procedures.

(b) Without interfering with the monitoring, observers must be entitled to:

(i) Receive an explanation of the measurement procedures;

(ii) Observe all steps related to the monitoring of lead performed at the place of exposure; and

(iii) Record the results obtained or receive copies of the results when returned by the laboratory.

[Statutory Authority: RCW 49.17.010, .040, .050, and .060. 16-09-085 (Order 15-08), § 296-155-17631, filed 04/19/16, effective 05/20/16. Statutory Authority: Chapter 49.17 RCW. 93-22-054 (Order 93-07), § 296-155-17631, filed 10/29/93, effective 12/10/93.]

WAC 296-155-17650 Appendix A to WAC 296-155-176-Substance data sheet for occupational exposure to lead.

The information contained in the appendices to WAC 296-155-176 is not intended by itself, to create any additional obligations not otherwise imposed by this standard nor detract from any existing obligation.

(1) **Substance identification.**

(a) Substance: Pure lead (Pb) is a heavy metal at room temperature and pressure and is a basic chemical element. It can combine with various other substances to form numerous lead compounds.

(b) Compounds covered by the standard: The word **"lead"** when used in this standard means elemental lead, all inorganic lead compounds and a class of organic lead compounds called lead soaps. This standard does not apply to other organic lead compounds.

(c) Uses: Exposure to lead occurs in several different occupations in the construction industry, including demolition or salvage of structures where lead or lead-containing materials are present; removal or encapsulation of lead-containing materials, new construction, alteration, repair, or renovation of structures that contain lead or materials containing lead; installation of products containing lead. In addition, there are construction related activities where exposure to lead may occur, including transportation, disposal, storage, or containment of lead or materials containing lead on construction sites, and maintenance operations associated with construction activities.

(d) Permissible exposure: The permissible exposure limit (PEL) set by the standard is 50 micrograms of lead per cubic meter of air (50 $\mu g/m^3$), averaged over an 8-hour workday.

(e) Action level: The standard establishes an action level of 30 micrograms of lead per cubic meter of air (30 $\mu g/m^3$), averaged over an 8-hour workday. The action level triggers several ancillary provisions of the standard such as exposure monitoring, medical surveillance, and training.

(2) **Health hazard data.**

(a) Ways in which lead enters your body. When absorbed into your body in certain doses, lead is a toxic substance. The object of the lead standard is to prevent absorption of harmful quantities of lead. The standard is intended to protect you not only from the immediate toxic effects of lead, but also from the serious toxic effects that may not become apparent until years of exposure have passed. Lead can be absorbed into your body by inhalation (breathing) and ingestion (eating). Lead (except for certain organic lead compounds not covered by the standard, such as tetraethyl lead) is not absorbed through your skin. When lead is scattered in the air as a dust, fume respiratory tract. Inhalation of airborne lead is generally the most important source of occupational lead absorption. You can also absorb lead through your digestive system if lead gets into your mouth and is swallowed. If you handle food, cigarettes, chewing tobacco, or make-up which have lead on them or handle them with hands contaminated with lead, this will contribute to ingestion.

A significant portion of the lead that you inhale or ingest gets into your blood stream. Once in your blood stream, lead is circulated throughout your body and stored in various organs and body tissues. Some of this lead is quickly filtered out of your body and excreted, but some remains in the blood and other tissues. As exposure to lead continues, the amount stored in your body will increase if you are absorbing more lead than your body is excreting. Even though you may not be aware of any immediate symptoms of disease, this lead stored in your tissues can be slowly causing irreversible damage, first to individual cells, then to your organs and whole body systems.

(b) Effects of overexposure to lead.

(i) Short term (acute) overexposure. Lead is a potent, systemic poison that serves no known useful function once absorbed by your body. Taken in large enough doses, lead can kill you in a matter of days. A condition affecting the brain called acute encephalopathy may arise which develops quickly to seizures, coma, and death from cardiorespiratory arrest. A short term dose of lead can lead to acute encephalopathy. Short term occupational exposures of this magnitude are highly unusual, but not impossible. Similar forms of encephalopathy may, however, arise from extended, chronic exposure to lower doses of lead. There is no sharp dividing line between rapidly developing acute effects of lead, and chronic effects which take longer to acquire. Lead adversely affects numerous body systems, and causes forms of health impairment and disease which arise after periods of exposure as short as days or as long as several years.

(ii) Long-term (chronic) overexposure. Chronic overexposure to lead may result in severe damage to your blood-forming, nervous, urinary and reproductive systems. Some common symptoms of chronic overexposure include loss of appetite, metallic taste in the mouth, anxiety, constipation, nausea, pallor, excessive tiredness, weakness, insomnia, headache, nervous irritability, muscle and joint pain or soreness, fine tremors, numbness, dizziness, hyperactivity and colic. In lead colic there may be severe abdominal pain. Damage to the central nervous system in general and the brain (encephalopathy) in particular is one of the most severe forms of lead poisoning. The most severe, often fatal, form of encephalopathy may be preceded by vomiting, a feeling of dullness progressing to drowsiness and stupor, poor memory, restlessness, irritability, tremor, and convulsions. It may arise suddenly with the onset of seizures, followed by coma, and death. There is a tendency for muscular weakness to develop at the same time. This weakness may progress to paralysis often observed as a characteristic “wrist drop” or “foot drop” and is a manifestation of a disease to the nervous system called peripheral neuropathy. Chronic overexposure to lead also results in kidney disease with few, if any, symptoms appearing until extensive and most likely permanent kidney damage has occurred. Routine laboratory tests reveal the presence of this kidney disease only after about two-thirds of kidney function is lost. When overt symptoms of urinary dysfunction arise, it is often too late to correct or prevent worsening conditions, and progression to kidney dialysis or death is possible. Chronic overexposure to lead impairs the reproductive systems of both men and women. Overexposure to lead may result in decreased sex drive, impotence and sterility in men. Lead can alter the structure of sperm cells raising the risk of birth defects.

There is evidence of miscarriage and stillbirth in women whose husbands were exposed to lead or who were exposed to lead themselves. Lead exposure also may result in decreased fertility, and abnormal menstrual cycles in women. The course of pregnancy may be adversely affected by exposure to lead since lead crosses the placental barrier and poses risks to developing fetuses. Children born of parents either one of whom were exposed to excess lead levels are more likely to have birth defects, mental retardation, behavioral disorders or die during the first year of childhood. Overexposure to lead also disrupts the blood-forming system resulting in decreased hemoglobin (the substance in the blood that carries oxygen to the cells) and ultimately anemia. Anemia is characterized by weakness, pallor and fatigability as a result of decreased oxygen carrying capacity in the blood.

(iii) Health protection goals of the standard. Prevention of adverse health effects for most workers from exposure to lead throughout a working lifetime requires that a worker's blood lead level (BLL, also expressed as PbB) be maintained at or below 40 micrograms per deciliter of whole blood (40 μg/dl). The blood lead levels of workers (both male and female workers) who intend to have children should be maintained below 30 μg/dl to minimize adverse reproductive health effects to the parents and to the developing fetus. The measurement of your blood lead level (BLL) is the most useful indicator of the amount of lead absorbed by your body. Blood lead levels are most often reported in units of milligrams (mg) or micrograms (μg) of lead (1 mg=1000 μg) per 100 grams (100g), 100 milliliters (100 ml) or deciliter (dl) of blood. These 3 units are essentially the same. Sometime BLLs are expressed in the form of mg% or μ g%. This is a shorthand notation for 100g, 100 ml, or dl. (References to BLL measurements in this standard are expressed in the form of μg/dl.)

BLL measurements show the amount of lead circulating in your blood stream, but do not give any information about the amount of lead stored in your various tissues. BLL measurements merely show current absorption of lead, not the effect that lead is having on your body or the effects that past lead exposure may have already caused. Past research into lead-related diseases, however, has focused heavily on associations between BLLs and various diseases. As a result, your BLL is an important indicator of the likelihood that you will gradually acquire a lead-related health impairment or disease.

Once your blood lead level climbs above 40 μg/dl, your risk of disease increases. There is a wide variability of individual response to lead, thus it is difficult to say that a particular BLL in a given person will cause a particular effect. Studies have associated fatal encephalopathy with BLLs as low as 150 μ g/dl. Other studies have shown other forms of diseases in some workers with BLLs well below 80 μg/dl. Your BLL is a crucial indicator of the risks to your health, but one other factor is also extremely important. This factor is the length of time you have had elevated BLLs. The longer you have an elevated BLL, the greater the risk that large quantities of lead are being gradually stored in your organs and tissues (body burden). The greater your overall body burden, the greater the chances of substantial permanent damage. The best way to prevent all forms of lead-related impairments and diseases-both short-term and long-term is to maintain your BLL below 40 μg/dl. The provisions of the standard are designed with this end in mind.

Your employer has prime responsibility to assure that the provisions of the standard are complied with both by the company and by individual workers. You, as a worker, however, also have a responsibility to assist your employer in complying with the standard. You can play a key role in protecting your own health by learning about the lead hazards and their control, learning what the standard requires, following the standard where it governs your own actions, and seeing that your employer complies with provisions governing employee actions.

(iv) Reporting signs and symptoms of health problems. You should immediately notify your employer if you develop signs or symptoms associated with lead poisoning or if you desire medical advice concerning the effects of current or past exposure to lead or your ability to have a healthy child. You should also notify your employer if you have difficulty breathing during a respirator fit test or while wearing a respirator. In each of these cases, your employer must make available to you appropriate medical examinations or consultations.

These must be provided at no cost to you and at a reasonable time and place. The standard contains a procedure whereby you can obtain a second opinion by a physician of your choice if your employer selected the initial physician.

[Statutory Authority: RCW 49.17.010, .040, .050, and .060. 16-09-085 (Order 15-08), § 296-155-17650, filed 04/19/16, effective 05/20/16. Statutory Authority: Chapter 49.17 RCW. 93-22-054 (Order 93-07), § 296-155-17650, filed 10/29/93, effective 12/10/93.]

WAC 296-155-17652 Appendix B to WAC 296-155-176-Employee standard summary.

This appendix summarizes key provisions of the standard for lead in construction that you as a worker should become familiar with.

(1) **Permissible exposure limit (PEL)-WAC 296-62-17607.**

The standard sets a permissible exposure limit (PEL) of 50 micrograms of lead per cubic meter of air (50μg/m^3), averaged over an 8-hour workday which is referred to as a time-weighted average (TWA). This is the highest level of lead in air to which you may be permissibly exposed over an 8-hour workday. However, since this is an 8-hour average, short exposures above the PEL are permitted so long as for each 8-hour work day your average exposure does not exceed this level. This standard, however, takes into account the fact that your daily exposure to lead can extend beyond a typical 8-hour workday as the result of overtime or other alterations in your work schedule. To deal with this situation, the standard contains a formula which reduces your permissible exposure when you are exposed more than 8 hours. For example, if you are exposed to lead for 10 hours a day, the maximum permitted average exposure would be 40μg/m^3.

(2) **Exposure assessment-WAC 296-155-17609.**

If lead is present in your workplace in any quantity, your employer is required to make an initial determination of whether any employee's exposure to lead exceeds the action level (30 μg/m^3 averaged over an 8-hour day). Employee exposure is that exposure which would occur if the employee were not using a respirator. This initial determination requires your employer to monitor workers' exposures unless the employee has objective data which can demonstrate conclusively that no employee will be exposed to lead in excess of the action

level. Where objective data is used in lieu of actual monitoring the employer must establish and maintain an accurate record, documenting its relevancy in assessing exposure levels for current job conditions. If such objective data is available, the employer need proceed no further on employee exposure assessment until such time that conditions have changed and the determination is no longer valid.

Objective data may be compiled from various sources, e.g., insurance companies and trade associations and information from suppliers or exposure data collected from similar operations. Objective data may also comprise previously collected sampling data including area monitoring. If it cannot be determined through using objective data that worker exposure is less than the action level, your employer must conduct monitoring or must rely on relevant previous personal sampling, if available. Where monitoring is required for the initial determination, it may be limited to a representative number of employees who are reasonably expected to have the highest exposure levels. If your employer has conducted appropriate air sampling for lead in the past 12 months, they may use these results, provided they are applicable to the same employee tasks and exposure conditions and meet the requirements for accuracy as specified in the standard. As with objective data, if such results are relied upon for the initial determination, your employer must establish and maintain a record as to the relevancy of such data to current job conditions.

If there have been any employee complaints of symptoms which may be attributable to exposure to lead or if there is any other information or observations which would indicate employee exposure to lead, this must also be considered as part of the initial determination. If this initial determination shows that a reasonable possibility exists that any employee may be exposed, without regard to respirator, over the action level, your employer must set up an air monitoring program to determine the exposure level representative of each employee exposed to lead at your workplace. In carrying out this air monitoring program, your employer is not required to monitor the exposure of every employee, but they must monitor a representative number of employees and job types. Enough sampling must be done to enable each employee's exposure level to be reasonably represent full shift exposure. In addition, these air samples must be taken under conditions which represent each employee's regular, daily exposure to lead. Sampling performed in the past 12 months may be used to determine exposures above the action level if such sampling was conducted during work activities essentially similar to present work conditions.

The standard lists certain tasks which may likely result in exposures to lead in excess of the PEL and, in some cases, exposures in excess of 50 times the PEL. If you are performing any of these tasks, your employer must provide you with appropriate respiratory protection, protective clothing and equipment, change areas, hand washing facilities, biological monitoring, and training until such time that an exposure assessment is conducted which demonstrates that your exposure level is below the PEL.

If you are exposed to lead and air sampling is performed, your employer is required to notify you in writing within 5 working days of the air monitoring results which represent your exposure. If the results indicate that your exposure exceeds the PEL (without regard to your use of a respirator), then your employer must also notify you of this in writing, and provide you with a description of the corrective action that has been taken or will be taken to reduce your exposure.

Your exposure must be rechecked by monitoring, at least every 6 months if your exposure is at or over the action level but below the PEL. Your employer may discontinue monitoring for you if two consecutive measurements, taken at least 7 days apart, are at or below the action level. Air monitoring must be repeated every 3 months if you are exposed over the PEL. Your employer must continue monitoring for you at this frequency until two consecutive measurements, taken at least 7 days apart, are below the PEL but above the action level, at which time your employer must repeat monitoring of your exposure every 6 months and may discontinue monitoring only after your exposure drops to or below the action level. However, whenever there is a change of equipment, process, control, or personnel or a new type of job is added at your workplace which may result in new or additional exposure to lead, your employer must perform additional monitoring.

(3) **Methods of compliance-WAC 296-155-17611.**

Your employer is required to assure that no employee is exposed to lead in excess of the PEL as an 8-hour TWA. The standard for lead in construction requires employers to institute engineering and work practice controls including administrative controls to the extent feasible to reduce employee exposure to lead. Where such controls are feasible but not adequate to reduce exposures below the PEL they must be used nonetheless to reduce exposures to the lowest level that can be accomplished by these means and then supplemented with appropriate respiratory protection.

Your employer is required to develop and implement a written compliance program prior to the commencement of any job where employee exposures may reach the PEL as an 8-hour TWA. The standard identifies the various elements that must be included in the plan. For example, employers are required to include a description of operations in which lead is emitted, detailing other relevant information about the operation such as the type of equipment used, the type of material involved, employee job responsibilities, operating procedures and maintenance practices. In addition, your employer's compliance plan must specify the means that will be used to achieve compliance and, where engineering controls are required, include any engineering plans or studies that have been used to select the control methods. If administrative controls involving job rotation are used to reduce employee exposure to lead, the job rotation schedule must be included in the compliance plan. The plan must also detail the type of protective clothing and equipment, including respirator, housekeeping and hygiene practices that will be used to protect you from the adverse effects of exposure to lead.

The written compliance program must be made available, upon request, to affected employees and their designated representatives, and the director.

Finally, the plan must be reviewed and updated at least every 6 months to ensure it reflects the current status in exposure control.

(4) **Respiratory protection-WAC 296-155-17613.**

Your employer is required to select respirator from the types listed in Table I of the Respiratory Protection section of the standard (see WAC 296-155-17613). Any respirator chosen must be certified by the National Institute for Occupational Safety and Health (NIOSH) under the provisions of 42 CFR part 84. This respirator selection table will enable your employer to choose a type of respirator that will give you a proper amount of protection based on your airborne lead exposure. Your employer may select a type of respirator that provides greater protection than that required by the standard; that is, one recommended for a higher concentration of lead than is present in your workplace.

For example, a powered air-purifying respirator (PAPR) is much more protective than a typical negative pressure respirator, and may also be more comfortable to wear. A PAPR has a filter, cartridge, or canister to clean the air, and a power source which continuously blows filtered air into your breathing zone. Your employer might make a PAPR available to you to ease the burden of having to wear a respirator for long periods of time. The standard provides that you can obtain a PAPR upon request.

Your employer must also start a Respiratory Protection Program. This program must include written procedures for the proper selection, use, cleaning, storage, and maintenance of respirator.

Your employer must ensure that your respirator facepiece fits properly. Proper fit of a respirator facepiece is critical to your protection from airborne lead. Obtaining a proper fit on each employee may require your employer to make available several different types of respirator masks. To ensure that your respirator fits properly and that facepiece leakage is minimal, your employer must give you either a qualitative or quantitative fit test as specified in WAC 296-842-15005.

(5) **Protective work clothing and equipment-WAC 296-155-17615.**

If you are exposed to lead above the PEL as an 8-hour TWA, without regard to your use of a respirator, or if you are exposed to lead compounds such as lead arsenate or lead azide which can cause skin and eye irritation, your employer must provide you with protective work clothing and equipment appropriate for the hazard. If work clothing is provided, it must be provided in a clean and dry condition at least weekly, and daily if your airborne exposure to lead is greater than 200 $\mu g/m^3$. Appropriate protective work clothing and equipment can include coveralls or similar full-body work clothing, gloves, hats, shoes or disposable shoe coverlets, and face shields or vented goggles. Your employer is required to provide all such equipment at no cost to you. In addition, your employer is responsible for providing repairs and replacement as necessary, and also is responsible for the cleaning, laundering or disposal of protective clothing and equipment.

The standard requires that your employer assure that you follow good work practices when you are working in areas where your exposure to lead may exceed the PEL. With respect to protective clothing and equipment, where appropriate, the following procedures should be observed prior to beginning work:

- Change into work clothing and shoe covers in the clean section of the designated changing areas;
- Use work garments of appropriate protective gear, including respirator before entering the work area; and
- Store any clothing not worn under protective clothing in the designated changing area.

Workers should follow these procedures upon leaving the work area:

- HEPA vacuum heavily contaminated protective work clothing while it is still being worn. At no time may lead be removed from protective clothing by any means which result in uncontrolled dispersal of lead into the air;
- Remove shoe covers and leave them in the work area;
- Remove protective clothing and gear in the dirty area of the designated changing area. Remove protective coveralls by carefully rolling down the garment to reduce exposure to dust.

- Remove respirator last; and
- Wash hands and face.

Workers should follow these procedures upon finishing work for the day (in addition to procedures described above):

- Where applicable, place disposal coveralls and shoe covers with the abatement waste;
- Contaminated clothing which is to be cleaned, laundered or disposed of must be placed in closed containers in the change room.
- Clean protective gear, including respirator, according to standard procedures;
- Wash hands and face again.

If showers are available, take a shower and wash hair. If shower facilities are not available at the work site, shower immediately at home and wash hair.

(6) **Housekeeping-WAC 296-155-17617.**

Your employer must establish a housekeeping program sufficient to maintain all surfaces as free as practicable of accumulations of lead dust. Vacuuming is the preferred method of meeting this requirement, and the use of compressed air to clean floors and other surfaces is generally prohibited unless removal with compressed air is done in conjunction with ventilation systems designed to contain dispersal of the lead dust. Dry or wet sweeping, shoveling, or brushing may not be used except where vacuuming or other equally effective methods have been tried and do not work. Vacuums must be used equipped with a special filter called a high-efficiency particulate air (HEPA) filter and emptied in a manner which minimizes the reentry of lead into the workplace.

(7) **Hygiene facilities and practices-WAC 296-155-17619.**

The standard requires that hand washing facilities be provided where occupational exposure to lead occurs. In addition, change areas, showers (where feasible), and lunchrooms or eating areas are to be made available to workers exposed to lead above the PEL. Your employer must assure that except in these facilities, food and beverage is not present or consumed, tobacco products are not present or used, and cosmetics are not applied, where airborne exposures are above the PEL. Change rooms provided by your employer must be equipped with separate storage facilities for your protective clothing and equipment and street clothes to avoid cross-contamination. After showering, no required protective clothing or equipment worn during the shift may be worn home. It is important that contaminated clothing or equipment be removed in change areas and not be worn home or you will extend your exposure and expose your family since lead from your clothing can accumulate in your house, car, etc.

Lunchrooms or eating areas may not be entered with protective clothing or equipment unless surface dust has been removed by vacuuming, downdraft booth, or other cleaning method. Finally, workers exposed above the PEL must wash both their hands and faces prior to eating, drinking, smoking or applying cosmetics.

All of the facilities and hygiene practices just discussed are essential to minimize additional sources of lead absorption from inhalation or ingestion of lead that may accumulate on you, your clothes, or your possessions. Strict compliance with these provisions can virtually eliminate several sources of lead exposure which significantly contribute to excessive lead absorption.

(8) **Medical surveillance-WAC 296-155-17621.**

The medical surveillance program is part of the standard's comprehensive approach to the prevention of lead-related disease. Its purpose is to supplement the main thrust of the standard which is aimed at minimizing airborne concentrations of lead and sources of ingestion. Only medical surveillance can determine if the other provisions of the standard have affectively protected you as an individual. Compliance with the standard's provision will protect most workers from the adverse effects of lead exposure, but may not be satisfactory to protect individual workers:

- Who have high body burdens of lead acquired over past years,
- Who have additional uncontrolled sources of nonoccupational lead exposure,
- Who exhibit unusual variations in lead absorption rates, or
- Who have specific nonwork related medical conditions which could be aggravated by lead exposure (e.g., renal disease, anemia).

In addition, control systems may fail, or hygiene and respirator programs may be inadequate. Periodic medical surveillance of individual workers will help detect those failures. Medical surveillance will also be important to protect your reproductive ability-regardless of whether you are a man or woman.

All medical surveillance required by the standard must be performed by or under the supervision of a licensed physician. The employer must provide required medical surveillance without cost to employees and at a reasonable time and place. The standard's medical surveillance program has two parts-periodic biological monitoring and medical examinations. Your employer's obligation to offer you medical surveillance is triggered by the results of the air monitoring program. Full medical surveillance must be made available to all employees who are or may be exposed to lead in excess of the action level for more than 30 days a year and whose blood lead level exceeds 40 μg/dl. Initial medical surveillance consisting of blood sampling and analysis for lead and zinc protoporphyrin must be provided to all employees exposed at any time (1 day) above the action level.

Biological monitoring under the standard must be provided at least every two months for the first 6 months and every 6 months thereafter until your blood lead level is below 40 μ g/dl. A zinc protoporphyrin (ZPP) test is a very useful blood test which measures an adverse metabolic effect of lead on your body and is therefore an indicator of lead toxicity.

If your BLL exceeds 40 μg/dl the monitoring frequency must be increased from every 6 months to at least every two months and not reduced until two consecutive BLLs indicate a blood lead level below 40 μg/dl. Each time your BLL is determined to be over 40 μ g/dl, your employer must notify you of this in writing within 5 working days of their receipt of the test results. The employer must also inform you that the standard requires temporary medical removal with economic protection when your BLL exceeds 50 μg/dl. (See Discussion of medical removal protection-WAC 296-155-17623.) Anytime your

BLL exceeds 50 μg/dl your employer must make available to you within two weeks of receipt of these test results a second follow-up BLL test to confirm your BLL.
If the two tests both exceed 50 μg/dl, and you are temporarily removed, then your employer must make successive BLL tests available to you on a monthly basis during the period of your removal.

Medical examinations beyond the initial one must be made available on an annual basis if your blood lead level exceeds 40 μg/dl at any time during the preceding year and you are being exposed above the airborne action level of 30 $\mu g/m^3$ for 30 or more days per year. The initial examination will provide information to establish a baseline to which subsequent data can be compared.

An initial medical examination to consist of blood sampling and analysis for lead and zinc protoporphyrin must also be made available (prior to assignment) for each employee being assigned for the first time to an area where the airborne concentration of lead equals or exceeds the action level at any time. In addition, a medical examination or consultation must be made available as soon as possible if you notify your employer that you are experiencing signs or symptoms commonly associated with lead poisoning or that you have difficulty breathing while wearing a respirator or during a respirator fit test. You must also be provided a medical examination or consultation if you notify your employer that you desire medical advice concerning the effects of current or past exposure to lead on your ability to procreate a healthy child.

Finally, appropriate follow-up medical examinations or consultations may also be provided for employees who have been temporarily removed from exposure under the medical removal protection provisions of the standard. (See subsection (9), below.)

The standard specifies the minimum content of preassignment and annual medical examinations. The content of other types of medical examinations and consultations is left up to the sound discretion of the examining physician. Preassignment and annual medical examinations must include:

- A detailed work history and medical history;
- A thorough physical examination, including an evaluation of your pulmonary status if you will be required to use a respirator;
- A blood pressure measurement; and
- A series of laboratory tests designed to check your blood chemistry and your kidney function.

In addition, at any time upon your request, a laboratory evaluation of male fertility will be made (microscopic examination of a sperm sample), or a pregnancy test will be given.

The standard does not require that you participate in any of the medical procedures, tests, etc. which your employer is required to make available to you. Medical surveillance can, however, play a very important role in protecting your health. You are strongly encouraged, therefore, to participate in a meaningful fashion. The standard contains a multiple physician review mechanism which will give you a chance to have a physician of your choice directly participate in the medical surveillance program. If you are dissatisfied with an examination by a physician chosen by your employer, you can select a second physician to conduct an independent analysis. The two doctors would attempt to resolve any differences of opinion, and select a third physician to resolve any firm dispute.

Generally your employer will choose the physician who conducts medical surveillance under the lead standard-unless you and your employer can agree on the choice of a physician or physicians. Some companies and unions have agreed in advance, for example, to use certain independent medical laboratories or panels of physicians. Any of these arrangements are acceptable so long as required medical surveillance is made available to workers.

The standard requires your employer to provide certain information to a physician to aid in their examination of you. This information includes:

- The standard and its appendices,
- A description of your duties as they relate to occupational lead exposure,
- Your exposure level or anticipated exposure level,
- A description of any personal protective equipment you wear,
- Prior blood lead level results, and
- Prior written medical opinions concerning you that the employer has.

After a medical examination or consultation the physician must prepare a written report which must contain:

- The physician's opinion as to whether you have any medical condition which places you at increased risk of material impairment to health from exposure to lead,
- Any recommended special protective measures to be provided to you,
- Any blood lead level determinations, and
- Any recommended limitation on your use of respirator.

This last element must include a determination of whether you can wear a powered air purifying respirator (PAPR) if you are found unable to wear a negative pressure respirator.

The medical surveillance program of the lead standard may at some point in time serve to notify certain workers that they have acquired a disease or other adverse medical condition as a result of occupational lead exposure. If this is true, these workers might have legal rights to compensation from public agencies, their employers, firms that supply hazardous products to their employers, or other persons. Some states have laws, including worker compensation laws, that disallow a worker who learns of a job-related health impairment to sue, unless the worker sues within a short period of time after learning of the impairment. (This period of time may be a matter of months or years.) An attorney can be consulted about these possibilities. It should be stressed that DOSH is in no way trying to either encourage or discourage claims or lawsuits. However, since results of the standard's medical surveillance program can significantly affect the legal remedies of a worker who has acquired a job-related disease or impairment, it is proper for DOSH to make you aware of this.

The medical surveillance section of the standard also contains provisions dealing with chelation. Chelation is the use of certain drugs (administered in pill form or injected into the body) to reduce the amount of lead absorbed in body tissues. Experience accumulated by the medical and scientific communities has largely confirmed the effectiveness of this type of therapy for the treatment of very severe lead poisoning. On the other hand, it has also been established that there can be a long list of extremely harmful side effects associated with the use of chelating agents. The medical community has balanced the

advantages and disadvantages resulting from the use of chelating agents in various circumstances and has established when the use of these agents is acceptable. The standard includes these accepted limitations due to a history of abuse of chelation therapy by some lead companies. The most widely used chelating agents are calcium disodium EDTA, (Ca Na2 EDTA), Calcium Disodium Versenate (Versenate), and d-penicillamine (penicillamine or Cupramine).

The standard prohibits “prophylactic chelation” of any employee by any person the employer retains, supervises or controls. “Prophylactic chelation” is the routine use of chelating or similarly acting drugs to prevent elevated blood levels in workers who are occupationally exposed to lead, or the use of these drugs to routinely lower blood lead levels to predesignated concentrations believed to be “safe”. It should be emphasized that where an employer takes a worker who has no symptoms of lead poisoning and has chelation carried out by a physician (either inside or outside of a hospital) solely to reduce the worker's blood lead level, that will generally be considered prophylactic chelation. The use of a hospital and a physician does not mean that prophylactic chelation is not being performed. Routine chelation to prevent increased or reduce current blood lead levels is unacceptable whatever the setting.

The standard allows the use of “therapeutic” or “diagnostic” chelation if administered under the supervision of a licensed physician in a clinical setting with thorough and appropriate medical monitoring. Therapeutic chelation responds to severe lead poisoning where there are marked symptoms. Diagnostic chelation involved giving a patient a dose of the drug then collecting all urine excreted for some period of time as an aid to the diagnosis of lead poisoning.

In cases where the examining physician determines that chelation is appropriate, you must be notified in writing of this fact before such treatment. This will inform you of a potentially harmful treatment, and allow you to obtain a second opinion.

(9) Medical removal protection-WAC 296-155-17623.

Excessive lead absorption subjects you to increased risk of disease. Medical removal protection (MRP) is a means of protecting you when, for whatever reasons, other methods, such as engineering controls, work practices, and respirator, have failed to provide the protection you need. MRP involves the temporary removal of a worker from their regular job to a place of significantly lower exposure without any loss of earnings, seniority, or other employment rights or benefits. The purpose of this program is to cease further lead absorption and allow your body to naturally excrete lead which has previously been absorbed. Temporary medical removal can result from an elevated blood lead level, or a medical opinion. For up to 18 months, or for as long as the job the employee was removed from lasts, protection is provided as a result of either form of removal. The vast majority of removed workers, however, will return to their former jobs long before this 18 month period expires.

You may also be removed from exposure even if your blood lead level is below 50 μg/dl if a final medical determination indicates that you temporarily need reduced lead exposure for medical reasons. If the physician who is implementing your employers medical program makes a final written opinion recommending your removal or other special protective measures, your employer must implement the physician's recommendation. If you are removed in this manner, you may only be returned when the doctor indicates that it is safe for you to do so.

The standard does not give specific instructions dealing with what an employer must do with a removed worker. Your job assignment upon removal is a matter for you, your employer and your union (if any) to work out consistent with existing procedures for job assignments. Each removal must be accomplished in a manner consistent with existing collective bargaining relationships. Your employer is given broad discretion to implement temporary removals so long as no attempt is made to override existing agreements. Similarly, a removed worker is provided no right to veto an employer's choice which satisfies the standard.

In most cases, employers will likely transfer removed employees to other jobs with sufficiently low lead exposure. Alternatively, a worker's hours may be reduced so that the time weighted average exposure is reduced, or they may be temporarily laid off if no other alternative is feasible.

In all of these situation, MRP benefits must be provided during the period of removal-i.e., you continue to receive the same earnings, seniority, and other rights and benefits you would have had if you had not been removed. Earnings includes more than just your base wage; it includes overtime, shift differentials, incentives, and other compensation you would have earned if you had not been removed. During the period of removal you must also be provided with appropriate follow-up medical surveillance. If you were removed because your blood lead level was too high, you must be provided with a monthly blood test. If a medical opinion caused your removal, you must be provided medical tests or examinations that the doctor believes to be appropriate. If you do not participate in this follow up medical surveillance, you may lose your eligibility for MRP benefits.

When you are medically eligible to return to your former job, your employer must return you to your **“former job status.”** This means that you are entitled to the position, wages, benefits, etc., you would have had if you had not been removed. If you would still be in your old job if no removal had occurred that is where you go back. If not, you are returned consistent with whatever job assignment discretion your employer would have had if no removal had occurred. MRP only seeks to maintain your rights, not expand them or diminish them.

If you are removed under MRP and you are also eligible for worker compensation or other compensation for lost wages, your employer's MRP benefits obligation is reduced by the amount that you actually receive from these other sources. This is also true if you obtain other employment during the time you are laid off with MRP benefits.

The standard also covers situations where an employer voluntarily removes a worker from exposure to lead due to the effects of lead on the employee's medical condition, even though the standard does not require removal. In these situations MRP benefits must still be provided as though the standard required removal. Finally, it is important to note that in all cases where removal is required, respirator cannot be used as a substitute. Respirator may be used before removal becomes necessary, but not as an alternative to a transfer to a low exposure job, or to a lay-off with MRP benefits.

(10) Employee information and training-WAC 296-155-17625.

Your employer is required to provide an information and training program for all employees exposed to lead above the action level or who may suffer skin or eye irritation from lead compounds such as lead arsenate or lead azide. The program must train these employees regarding the specific hazards associated with their work environment, protective measures which can be taken, including the contents of any compliance plan in effect, the danger of lead to their bodies (including their reproductive systems), and their rights under the standard. All employees must be trained prior to initial assignment to areas where there is a possibility of exposure over the action level.

This training program must also be provided at least annually thereafter unless further exposure above the action level will not occur.

(11) Signs-WAC 296-155-17627.

The standard requires that the following warning sign be posted in work areas where the exposure to lead exceeds the PEL:

DANGER LEAD WORK AREA
MAY DAMAGE FERTILITY OF THE UNBORN CHILD
CAUSES DAMAGE TO THE CENTRAL NERVOUS SYSTEM
DO NOT EAT, DRINK OR SMOKE IN THIS AREA

Prior to June 1, 2016, you may use the following legend in lieu of that specified above:

WARNING LEAD WORK AREA
POISON
NO SMOKING OR EATING

(12) Recordkeeping-WAC 296-155-17629.

Your employer is required to keep all records of exposure monitoring for airborne lead. These records must include the name and job classification of employees measured, details of the sampling and analytical techniques, the results of this sampling, and the type of respiratory protection being worn by the person sampled. Such records are to be retained for at least 30 years. Your employer is also required to keep all records of biological monitoring and medical examination results. These records must include the names of the employees, the physician's written opinion, and a copy of the results of the examination. Medical records must be preserved and maintained for the duration of employment plus 30 years. However, if the employee's duration of employment is less than one year, the employer need not retain that employee's medical records beyond the period of employment if they are provided to the employee upon termination of employment.

Recordkeeping is also required if you are temporarily removed from your job under the medical removal protection program. This record must include your name and Social Security number, the date of your removal and return, how the removal was or is being accomplished, and whether or not the reason for the removal was an elevated blood lead level. Your employer is required to keep each medical removal record only for as long as the duration of an employee's employment.

The standard requires that if you request to see or copy environmental monitoring, blood lead level monitoring, or medical removal records, they must be made available to you or to a representative that you authorize. Your union also has access to these records. Medical records other than BLL's must also be provided upon request to you, to your physician or to any other person whom you may specifically designate. Your union does not have access to your personal medical records unless you authorize their access.

(13) Observation of monitoring-WAC 296-155-17631.

When air monitoring for lead is performed at your workplace as required by this standard, your employer must allow you or someone you designate to act as an observer of the monitoring. Observers are entitled to an explanation of the measurement procedure, and to record the results obtained. Since results will not normally be available at the time of the monitoring, observers are entitled to record or receive the results of the monitoring when returned by the laboratory. Your employer is required to provide the observer with any personal protective devices required to be worn by employees working in the area that is being monitored. The employer must require the observer to wear all such equipment and to comply with all other applicable safety and health procedures.

(14) Startup date-WAC 296-155-17635.

Employer obligations under the standard begin as of that date with full implementation of engineering controls as soon as possible but no later than within 4 months, and all other provisions completed as soon as possible, but no later than within 2 months from the effective date.

(15) For additional information.

(a) A copy of the standard for lead in construction can be obtained free of charge by calling or writing to the department of labor and industries, Post Office Box 44620, Mailstop 44620, Olympia, Washington 98504-4620: Telephone (360) 956-5527.

(b) Additional information about the standard, its enforcement, and your employer's compliance can be obtained from the nearest office listed in your telephone directory under the state of Washington, department of labor and industries.

[Statutory Authority: RCW 49.17.010, .040, .050, and .060. 16-09-085 (Order 15-08), § 296-155-17652, filed 04/19/16, effective 05/20/16. Statutory Authority: RCW 49.17.010, .040, .050, and .060. 14-07-086 (Order 13-08), § 296-155-17652, filed 03/18/14, effective 05/01/14. Statutory Authority: RCW 49.17.010, .040, .050, and .060. 05-03-093 (Order 04-41), § 296-155-17652, filed 01/18/05, effective 03/01/05. Statutory Authority: RCW 49.17.010, .040, .050. 99-10 (Order 98-10), § 296-155-17652, filed 05/04/99, effective 09/01/99. Statutory Authority: Chapter 49.17 RCW. 93-22-054 (Order 93-07), § 296-155-17652, filed 10/29/93, effective 12/10/93.]

WAC 296-155-17654 Appendix C to WAC 296-155-176-Medical surveillance guidelines.

(1) **Introduction.**

The primary purpose of the Washington Industrial Safety and Health Act of 1973 is to assure, so far as possible, safe and healthful working conditions for every working person. The occupational health standard for lead in construction is designed to protect workers exposed to inorganic lead including metallic lead, all inorganic lead compounds and organic lead soaps.

Under this standard occupational exposure to inorganic lead is to be limited to 50 $\mu g/m^3$ (micrograms per cubic meter) based on an 8 hour time-weighted average (TWA). This permissible exposure limit (PEL) must be achieved through a combination of engineering, work practice and administrative controls to the extent feasible. Where these controls are in place but are found not to reduce employee exposures to or below the PEL, they must be used nonetheless, and supplemented with respirators to meet the 50 $\mu g/m^3$ exposure limit.

The standard also provides for a program of biological monitoring for employees exposed to lead above the action level at any time, and additional medical surveillance for all employees exposed to levels of inorganic lead above 30 $\mu g/m^3$ (TWA) for more than 30 days per year and whose BLL exceeds 40 $\mu g/dl$.

The purpose of this document is to outline the medical surveillance provisions of the standard for inorganic lead in construction, and to provide further information to the physician regarding the examination and evaluation of workers exposed to inorganic lead.

Subsection (2) provides a detailed description of the monitoring procedure including the required frequency of blood testing for exposed workers, provisions for medical removal protection (MRP), the recommended right of the employee to a second medical opinion, and notification and recordkeeping requirements of the employer. A discussion of the requirements for respirator use and respirator monitoring and DOSH's position on prophylactic chelation therapy are also included in this subsection.

Subsection (3) discusses the toxic effects and clinical manifestations of lead poisoning and effects of lead intoxication on enzymatic pathways in heme synthesis. The adverse effects on both male and female reproductive capacity and on the fetus are also discussed.

Subsection (4) outlines the recommended medical evaluation of the worker exposed to inorganic lead, including details of the medical history, physical examination, and recommended laboratory tests, which are based on the toxic effects of lead as discussed in subsection (3).

Subsection (5) provides detailed information concerning the laboratory tests available for the monitoring of exposed workers. Included also is a discussion of the relative value of each test and the limitations and precautions which are necessary in the interpretation of the laboratory results.

(2) **Medical surveillance and monitoring requirements for workers exposed to inorganic lead.**

Under the standard for inorganic lead in the construction industry, initial medical surveillance consisting of biological monitoring to include blood lead and ZPP level determination must be provided to employees exposed to lead at or above the action level on any one day. In addition, a program of biological monitoring is to be made available to all employees exposed above the action level at any time and additional medical surveillance is to be made available to all employees exposed to lead above 30 $\mu g/m^3$ TWA for more than 30 days each year and whose BLL exceeds 40 $\mu g/dl$. This program consists of periodic blood sampling and medical evaluation to be performed on a schedule which is defined by previous laboratory results, worker complaints or concerns, and the clinical assessment of the examining physician.

Under this program, the blood lead level (BLL) of all employees who are exposed to lead above 30 $\mu g/m^3$ for more than 30 days per year or whose blood lead is above 40 μg/dl but exposed for no more than 30 days per year is to be determined at least every two months for the first 6 months of exposure and every six months thereafter. The frequency is increased to every two months for employees whose last blood lead level was 40 μg/dl or above. For employees who are removed from exposure to lead due to an elevated blood lead, a new blood lead level must be measured monthly. A zinc protoporphyrin (ZPP) measurement is strongly recommended on each occasion that a blood lead level measurement is made.

An annual medical examination and consultation performed under the guidelines discussed in subsection (4) is to be made available to each employee exposed above 30 $\mu g/m^3$ for more than 30 days per year for whom a blood test conducted at any time during the preceding 12 months indicated a blood lead level at or above 40 μg/dl. Also, an examination is to be given to all employees prior to their assignment to an area in which airborne lead concentrations reach or exceed the 30 $\mu g/m^3$ for more than 30 days per year. In addition, a medical examination must be provided as soon as possible after notification by an employee that the employee has developed signs or symptoms commonly associated with lead intoxication, that the employee desires medical advice regarding lead exposure and the ability to procreate a healthy child, or that the employee has demonstrated difficulty in breathing during a respirator fitting test or during respirator use. An examination is also to be made available to each employee removed from exposure to lead due to a risk of sustaining material impairment to health, or otherwise limited or specially protected pursuant to medical recommendations.

Results of biological monitoring or the recommendations of an examining physician may necessitate removal of an employee from further lead exposure pursuant to the standard's medical removal protection (MRP) program. The object of the MRP program is to provide temporary medical removal to workers either with substantially elevated blood lead levels or otherwise at risk of sustaining material health impairment from continued substantial exposure to lead.

Under the standard's ultimate worker removal criteria, a worker is to be removed from any work having an 8 hour TWA exposure to lead of 30 $\mu g/m^3$ when their blood lead level reaches 50 μg/dl and is confirmed by a second follow-up blood lead level performed within two weeks after the employer receives the results of the first blood sampling test. Return of the employee to their job status depends on a worker's blood lead level declining to 40 μ g/dl.

As part of the standard, the employer is required to notify in writing each employee whose blood lead level exceeds 40 μg/dl. In addition each such employee is to be informed that the standard requires medical removal with MRP benefits, discussed below, when an employee's blood lead level exceeds the above defined limit.

In addition to the above blood lead level criterion, temporary worker removal may also take place as a result of medical determinations and recommendations. Written medical opinions must be prepared after each examination pursuant to the standard. If the examining physician includes a medical finding, determination or opinion that the employee has a medical condition which places the employee at increased risk of material health impairment from exposure to lead, then the employee must be removed from exposure to lead at or above 30 $\mu g/m^3$. Alternatively, if the examining physician recommends special protective measures for an employee (e.g., use of a powered air purifying respirator) or recommends limitations on an employee's exposure to lead, then the employer must implement these recommendations.

Recommendations may be more stringent than the specific provisions of the standard. The examining physician, therefore, is given broad flexibility to tailor special protective procedures to the needs of individual employees. This flexibility extends to the evaluation and management of pregnant workers and male and female workers who are planning to raise children. Based on the history, physical examination, and laboratory studies, the physician might recommend special protective measures or medical removal for an employee who is pregnant or who is planning to conceive a child when, in the physician's judgment, continued exposure to lead at the current job would pose a significant risk. The return of the employee to their former job status, or the removal of special protections or limitations, depends upon the examining physician determining that the employee is no longer at increased risk of material impairment or that special measures are no longer needed.

During the period of any form of special protection or removal, the employer must maintain the worker's earnings, seniority, and other employment rights and benefits (as though the worker had not been removed) for a period of up to 18 months or for as long as the job the employee was removed from lasts if less than 18 months. This economic protection will maximize meaningful worker participation in the medical surveillance program, and is appropriate as part of the employer's overall obligation to provide a safe and healthful workplace. The provisions of MRP benefits during the employee's removal period may, however, be conditioned upon participation in medical surveillance.

The lead standard provides for a multiple physician review in cases where the employee wishes a second opinion concerning potential lead poisoning or toxicity. If an employee wishes a second opinion, they can make an appointment with a physician of their choice. This second physician will review the findings, recommendations or determinations of the first physician and conduct any examinations, consultations or tests deemed necessary in an attempt to make a final medical determination. If the first and second physicians do not agree in their assessment they must try to resolve their differences. If they cannot reach an agreement then they must designate a third physician to resolve the dispute.

The employer must provide examining and consulting physicians with the following specific information: A copy of the lead regulations and all appendices, a description of the employee's duties as related to exposure, the exposure level or anticipated level to lead and any other toxic substances (if applicable), a description of personal protective equipment used, blood lead levels, and all prior written medical opinions regarding the employee in the employer's possession or control. The employer must also obtain from the physician and provide the employee with a written medical opinion containing blood lead levels, the physician’s opinion as to whether the employee is at risk of material impairment to health, any recommended protective measures for the employee if further exposure is permitted, as well as any recommended limitations upon an employee's use of respirators.

Employers must instruct each physician not to reveal to the employer in writing or in any other way their findings, laboratory results, or diagnoses which are felt to be unrelated to occupational lead exposure. They must also instruct each physician to advise the employee of any occupationally or non-occupationally related medical condition requiring further treatment or evaluation.

The standard provides for the use of respirators where engineering and other primary controls are not effective. However, the use of respirator protection must not be used in lieu of temporary medical removal due to elevated blood lead levels or findings that an employee is at risk of material health impairment. This is based on the numerous inadequacies of respirators including skin rash where the facepiece makes contact with the skin, unacceptable stress to breathing in some workers with underlying cardiopulmonary impairment, difficulty in providing adequate fit, the tendency for respirators to create additional hazards by interfering with vision, hearing, and mobility, and the difficulties of assuring the maximum effectiveness of a complicated work practice program involving respirators. Respirators do, however, serve a useful function where engineering and work practice controls are inadequate by providing supplementary, interim, or short-term protection, provided they are properly selected for the environment in which the employee will be working, properly fitted to the employee, maintained and cleaned periodically, and worn by the employee when required.

In its standard on occupational exposure to inorganic lead in the construction industry, DOSH has prohibited prophylactic chelation. Diagnostic and therapeutic chelation are permitted only under the supervision of a licensed physician with appropriate medical monitoring in an acceptable clinical setting. The decision to initiate chelation therapy must be made on an individual basis and take into account the severity of symptoms felt to be a result of lead toxicity along with blood lead levels, ZPP levels, and other laboratory tests as appropriate. EDTA and penicillamine which are the primary chelating agents used in the therapy of occupational lead poisoning have significant potential side effects and their use must be justified on the basis of expected benefits to the worker. Unless frank and severe symptoms are present, therapeutic chelation is not recommended, given the opportunity to remove a worker from exposure and allow the body to naturally excrete accumulated lead. As a diagnostic aid, the chelation mobilization test using CA-EDTA has limited applicability. According to some investigators, the test can differentiate between lead-induced and other nephropathies. The test may also provide an estimation of the mobile fraction of the total body lead burden.

Employers are required to assure that accurate records are maintained on exposure assessment, including environmental monitoring, medical surveillance, and medical removal for each employee. Exposure assessment records must be kept for at least 30 years. Medical surveillance records must be kept for the duration of employment plus 30 years except in cases where the employment was less than one year. If duration of employment is less than one year, the employer need not retain this record beyond the term of employment if the record is provided to the employee upon termination of employment. Medical removal records also must be maintained for the duration of employment. All records required under the standard must be made available upon request to the director. Employers must also make environmental and biological monitoring and medical removal records available to affected employees and to former employees or their authorized employee representatives. Employees or their specifically designated representatives have access to their entire medical surveillance records.

In addition, the standard requires that the employer inform all workers exposed to lead at or above 30 μg/m^3 of the provisions of the standard and all its appendices, the purpose and description of medical surveillance and provisions for medical removal protection if temporary removal is required. An understanding of the potential health effects of lead exposure by all exposed employees along with full understanding of their rights under the lead standard is essential for an effective monitoring program.

(3) **Adverse health effects of inorganic lead.**

Although the toxicity of lead has been known for 2,000 years, the knowledge of the complex relationship between lead exposure and human response is still being refined. Significant research into the toxic properties of lead continues throughout the world, and it should be anticipated that our understanding of thresholds of effects and margins of safety will be improved in future years. The provisions of the lead standard are founded on two prime medical judgments: First, the prevention of adverse health effects from exposure to lead throughout a working lifetime requires that worker blood lead levels be maintained at or below 40 μg/dl and second, the blood lead levels of workers, male or female, who intend to parent in the near future should be maintained below 30 μg/dl to minimize adverse reproductive health effects to the parents and developing fetus. The adverse effects of lead on reproduction are being actively researched and DOSH encourages the physician to remain abreast of recent developments in the area to best advise pregnant workers or workers planning to conceive children.

The spectrum of health effects caused by lead exposure can be subdivided into 5 developmental stages: Normal, physiological changes of uncertain significance, pathophysiological changes, overt symptoms (morbidity), and mortality. Within this process there are no sharp distinctions, but rather a continuum of effects. Boundaries between categories overlap due to the wide variation of individual responses and exposures in the working population. DOSH's development of the lead standard focused on pathophysiological changes as well as later stages of disease.

(a) Heme synthesis inhibition. The earliest demonstrated effect of lead involves its ability to inhibit at least two enzymes of the heme synthesis pathway at very low blood levels. Inhibition of delta aminolevulinic acid dehydrase (ALA-D) which catalyzes the conversion of delta-aminolevulinic acid (ALA) to protoporphyrin is observed at a blood lead level below 20 μg/dl. At a blood lead level of 40 μg/dl, more than 20% of the population would have 70% inhibition of ALA-D. There is an exponential increase in ALA excretion at blood lead levels greater than 40 μg/dl.

Another enzyme, ferrochelatase, is also inhibited at low blood lead levels. Inhibition of ferrochelatase leads to increased free erythrocyte protoporphyrin (FEP) in the blood which can then bind to zinc to yield zinc protoporphyrin. At a blood lead level of 50 μg/dl or greater, nearly 100% of the population will have an increase in FEP. There is also an exponential relationship between blood lead levels greater than 40 μ g/dl and the associated ZPP level, which has led to the development of the ZPP screening test for lead exposure.

While the significance of these effects is subject to debate, it is DOSH's position that these enzyme disturbances are early stages of a disease process which may eventually result in the clinical symptoms of lead poisoning. Whether or not the effects do progress to the later stages of clinical disease, disruption of these enzyme processes over a working lifetime is considered to be a material impairment of health.

One of the eventual results of lead-induced inhibition of enzymes in the heme synthesis pathway is anemia which can be asymptomatic if mild but associated with a wide array of symptoms including dizziness, fatigue, and tachycardia when more severe. Studies have indicated that lead levels as low as 50 μg/dl can be associated with a definite decreased hemoglobin, although most cases of lead-induced anemia, as well as shortened red-cell survival times, occur at lead levels exceeding 80 μg/dl. Inhibited hemoglobin synthesis is more common in chronic cases whereas shortened erythrocyte life span is more common in acute cases.

In lead-induced anemias, there is usually a reticulocytosis along with the presence of basophilic stippling, and ringed sideroblasts, although none of the above are pathognomonic for lead-induced anemia.

(b) Neurological effects. Inorganic lead has been found to have toxic effects on both the central and peripheral nervous systems. The earliest stages of lead-induced central nervous system effects first manifest themselves in the form of behavioral disturbances and central nervous system symptoms including irritability, restlessness, insomnia and other sleep disturbances, fatigue, vertigo, headache, poor memory, tremor, depression, and apathy. With more severe exposure, symptoms can progress to drowsiness, stupor, hallucinations, delirium, convulsions and coma.

The most severe and acute form of lead poisoning which usually follows ingestion or inhalation of large amounts of lead is acute encephalopathy which may arise precipitously with the onset of intractable seizures, coma, cardiorespiratory arrest, and death within 48 hours.

While there is disagreement about what exposure levels are needed to produce the earliest symptoms, most experts agree that symptoms definitely can occur at blood lead levels of 60 μg/dl whole blood and therefore recommend a 40 μg/dl maximum. The central nervous system effects frequently are not reversible following discontinued exposure or chelation therapy and when improvement does occur, it is almost always only partial.

The peripheral neuropathy resulting from lead exposure characteristically involves only motor function with minimal sensory damage and has a marked predilection for the extensor muscles of the most active extremity. The peripheral neuropathy can occur with varying degrees of severity. The earliest and mildest form which can be detected in workers with blood lead levels as low as 50 μg/dl is manifested by slowing of motor nerve conduction velocity often without clinical symptoms. With progression of the neuropathy there is development of painless extensor muscle weakness usually involving the extensor muscles of the fingers and hand in the most active upper extremity, followed in severe cases by wrist drop or, much less commonly, foot drop.

In addition to slowing of nerve conduction, electromyographical studies in patients with blood lead levels greater than 50 μg/dl have demonstrated a decrease in the number of acting motor unit potentials, an increase in the duration of motor unit potentials, and spontaneous pathological activity including fibrillations and fasciculations. Whether these effects occur at levels of 40 μg/dl is undetermined.

While the peripheral neuropathies can occasionally be reversed with therapy, again such recovery is not assured particularly in the more severe neuropathies and often improvement is only partial. The lack of reversibility is felt to be due in part to segmental demyelination.

(c) Gastrointestinal. Lead may also affect the gastrointestinal system producing abdominal colic or diffuse abdominal pain, constipation, obstipation, diarrhea, anorexia, nausea and vomiting. Lead colic rarely develops at blood lead levels below 80 μg/dl.

(d) Renal. Renal toxicity represents one of the most serious health effects of lead poisoning. In the early stages of disease nuclear inclusion bodies can frequently be identified in proximal renal tubular cells. Renal function remains normal and the changes in this stage are probably reversible. With more advanced disease there is progressive interstitial fibrosis and impaired renal function. Eventually extensive interstitial fibrosis ensues with sclerotic glomeruli and dilated and atrophied proximal tubules; all represent end stage kidney disease. Azotemia can be progressive, eventually resulting in frank uremia necessitating dialysis. There is occasionally associated hypertension and hyperuricemia with or without gout.

Early kidney disease is difficult to detect. The urinalysis is normal in early lead nephropathy and the blood urea nitrogen and serum creatinine increase only when two-thirds of kidney function is lost. Measurement of creatinine clearance can often detect earlier disease as can other methods of measurement of glomerular filtration rate. An abnormal Ca-EDTA mobilization test has been used to differentiate between lead-induced and other nephropathies, but this procedure is not widely accepted. A form of Fanconi syndrome with aminoaciduria, glycosuria, and hyperphosphaturia indicating severe injury to the proximal renal tubules is occasionally seen in children.

(e) Reproductive effects. Exposure to lead can have serious effects on reproductive function in both males and females. In male workers exposed to lead there can be a decrease in sexual drive, impotence, decreased ability to produce healthy sperm, and sterility. Malformed sperm (teratospermia), decreased number of sperm (hypospermia), and sperm with decreased motility (asthenospermia) can all occur. Teratospermia has been noted at mean blood lead levels of 53 μg/dl and hypospermia and asthenospermia at 41 μg/dl. Furthermore, there appears to be a dose-response relationship for teratospermia in lead exposed workers.

Women exposed to lead may experience menstrual disturbances including dysmenorrhea, menorrhagia and amenorrhea. Following exposure to lead, women have a higher frequency of sterility, premature births, spontaneous miscarriages, and stillbirths.

Germ cells can be affected by lead and cause genetic damage in the egg or sperm cells before conception and result in failure to implant, miscarriage, stillbirth, or birth defects.

Infants of mothers with lead poisoning have a higher mortality during the first year and suffer from lowered birth weights, slower growth, and nervous system disorders.

Lead can pass through the placental barrier and lead levels in the mother's blood are comparable to concentrations of lead in the umbilical cord at birth. Transplacental passage becomes detectable at 12-14 weeks of gestation and increases until birth.

There is little direct data on damage to the fetus from exposure to lead but it is generally assumed that the fetus and newborn would be at least as susceptible to neurological damage as young children. Blood lead levels of 50-60 μg/dl in children can cause significant neurobehavioral impairments and there is evidence of hyperactivity at blood levels as low as 25 μg/dl. Given the overall body of literature concerning the adverse health effects of lead in children, DOSH feels that the blood lead level in children should be maintained below 30 μg/dl with a population mean of 15 μg/dl. Blood lead levels in the fetus and newborn likewise should not exceed 30 μ g/dl.

Because of lead's ability to pass through the placental barrier and also because of the demonstrated adverse effects of lead on reproductive function in both the male and female as well as the risk of genetic damage of lead on both the ovum and sperm, DOSH recommends a 30 μg/dl maximum permissible blood lead level in both males and females who wish to bear children.

(f) Other toxic effects. Debate and research continue on the effects of lead on the human body. Hypertension has frequently been noted in occupationally exposed individuals although it is difficult to assess whether this is due to lead's adverse effects on the kidney or if some other mechanism is involved. Vascular and electrocardiographic changes have been detected but have not been well characterized. Lead is thought to impair thyroid function and interfere with the pituitary-adrenal axis, but again these effects have not been well defined.

(4) **Medical evaluation**.

The most important principle in evaluating a worker for any occupational disease including lead poisoning is a high index of suspicion on the part of the examining physician. As discussed in section (3), lead can affect numerous organ systems and produce a wide array of signs and symptoms, most of which are non-specific and subtle in nature at least in the early stages of disease. Unless serious concern for lead toxicity is present, many of the early clues to diagnosis may easily be overlooked.

The crucial initial step in the medical evaluation is recognizing that a worker's employment can result in exposure to lead. The worker will frequently be able to define exposures to lead and lead containing materials but often will not volunteer this information unless specifically asked. In other situations the worker may not know of any exposures to lead but the suspicion might be raised on the part of the physician because of the industry or occupation of the worker. Potential occupational exposure to lead and its compounds occur in many occupations in the construction industry, including demolition and salvaging operations, removal or encapsulation of materials containing lead, construction, alteration, repair or renovation of structures containing lead, transportation, disposal, storage or containment of lead or lead-containing materials on construction sites, and maintenance operations associated with construction activities.

Once the possibility for lead exposure is raised, the focus can then be directed toward eliciting information from the medical history, physical exam, and finally from laboratory data to evaluate the worker for potential lead toxicity.

A complete and detailed work history is important in the initial evaluation. A listing of all previous employment with information on job description, exposure to fumes or dust, known exposures to lead or other toxic substances, a description of any personal protective equipment used, and previous medical surveillance should all be included in the worker's

record. Where exposure to lead is suspected, information concerning on-the-job personal hygiene, smoking or eating habits in work areas, laundry procedures, and use of any protective clothing or respiratory protection equipment should be noted. A complete work history is essential in the medical evaluation of a worker with suspected lead toxicity, especially when long term effects such as neurotoxicity and nephrotoxicity are considered.

The medical history is also of fundamental importance and should include a listing of all past and current medical conditions, current medications including proprietary drug intake, previous surgeries and hospitalizations, allergies, smoking history, alcohol consumption, and also non-occupational lead exposures such as hobbies (hunting, riflery). Also known childhood exposures should be elicited. Any previous history of hematological, neurological, gastrointestinal, renal, psychological, gynecological, genetic, or reproductive problems should be specifically noted.

A careful and complete review of systems must be performed to assess both recognized complaints and subtle or slowly acquired symptoms which the worker might not appreciate as being significant. The review of symptoms should include the following:

- General-weight loss, fatigue, decreased appetite.
- Head, eyes, ears, nose, throat (HEENT)-headaches, visual disturbances or decreased visual acuity, hearing deficits or tinnitus, pigmentation of the oral mucosa, or metallic taste in mouth.
- Cardio-pulmonary-shortness of breath, cough, chest pains, palpitations, or orthopnea.
- Gastrointestinal-nausea, vomiting, heartburn, abdominal pain, constipation or diarrhea.
- Neurologic-irritability, insomnia, weakness (fatigue), dizziness, loss of memory, confusion, hallucinations, incoordination, ataxia, decreased strength in hands or feet, disturbances in gait, difficulty in climbing stairs, or seizures.
- Hematologic-pallor, easy fatigability, abnormal blood loss, melena.
- Reproductive (male and female and spouse where relevant)-history of infertility, impotence, loss of libido, abnormal menstrual periods, history of miscarriages, stillbirths, or children with birth defects.
- Musculo-skeletal-muscle and joint pains.

The physical examination should emphasize the neurological, gastrointestinal, and cardiovascular systems. The worker's weight and blood pressure should be recorded and the oral mucosa checked for pigmentation characteristic of a possible Burtonian or lead line on the gingiva. It should be noted, however, that the lead line may not be present even in severe lead poisoning if good oral hygiene is practiced.

The presence of pallor on skin examination may indicate an anemia which, if severe, might also be associated with a tachycardia. If an anemia is suspected, an active search for blood loss should be undertaken including potential blood loss through the gastrointestinal tract.

A complete neurological examination should include an adequate mental status evaluation including a search for behavioral and psychological disturbances, memory testing, evaluation for irritability, insomnia, hallucinations, and mental clouding. Gait and coordination should be examined along with close observation for tremor. A detailed evaluation of peripheral nerve function including careful sensory and motor function testing is warranted. Strength testing particularly of extensor muscle groups of all extremities is of fundamental importance.

Cranial nerve evaluation should also be included in the routine examination.

The abdominal examination should include auscultation for bowel sounds and abdominal bruits and palpation for organomegaly, masses, and diffuse abdominal tenderness.

Cardiovascular examination should evaluate possible early signs of congestive heart failure. Pulmonary status should be addressed particularly if respirator protection is contemplated.

As part of the medical evaluation, the lead standard requires the following laboratory studies:

- Blood lead level.
- Hemoglobin and hematocrit determinations, red cell indices, and examination of the peripheral blood smear to evaluate red blood cell morphology.
- Blood urea nitrogen.
- Serum creatinine.
- Routine urinalysis with microscopic examination.
- A zinc protoporphyrin level.

In addition to the above, the physician is authorized to order any further laboratory or other tests which they deem necessary in accordance with sound medical practice. The evaluation must also include pregnancy testing or laboratory evaluation of male fertility if requested by the employee. Additional tests which are probably not warranted on a routine basis but may be appropriate when blood lead and ZPP levels are equivocal include delta aminolevulinic acid and coproporphyrin concentrations in the urine, and dark-field illumination for detection of basophilic stippling in red blood cells.

If an anemia is detected further studies including a careful examination of the peripheral smear, reticulocyte count, stool for occult blood, serum iron, total iron binding capacity, bilirubin, and, if appropriate, vitamin B12 and folate may be of value in attempting to identify the cause of the anemia.

If a peripheral neuropathy is suspected, nerve conduction studies are warranted both for diagnosis and as a basis to monitor any therapy.

If renal disease is questioned, a 24 hour urine collection for creatinine clearance, protein, and electrolytes may be indicated. Elevated uric acid levels may result from lead-induced renal disease and a serum uric acid level might be performed.

An electrocardiogram and chest x-ray may be obtained as deemed appropriate.

Sophisticated and highly specialized testing should not be done routinely and where indicated should be under the direction of a specialist.

(5) **Laboratory evaluation.**

The blood lead level at present remains the single most important test to monitor lead exposure and is the test used in the medical surveillance program under the lead standard to guide employee medical removal. The ZPP has several advantages over the blood lead level. Because of its relatively recent development and the lack of extensive data concerning its interpretation, the ZPP currently remains an ancillary test.

This section will discuss the blood lead level and ZPP in detail and will outline their relative advantages and disadvantages. Other blood tests currently available to evaluate lead exposure will also be reviewed.

The blood lead level is a good index of current or recent lead absorption when there is no anemia present and when the worker has not taken any chelating agents. However, blood lead levels along with urinary lead levels do not necessarily indicate the total body burden of lead and are not adequate measures of past exposure. One reason for this is that lead has a high affinity for bone and up to 90% of the body's total lead is deposited there. A very important component of the total lead body burden is lead in soft tissue (liver, kidney, and brain). This fraction of the lead body burden, the biologically active lead, is not entirely reflected by blood lead levels since it is a function of the dynamics of lead absorption, distribution, deposition in bone and excretion. Following discontinuation of exposure to lead, the excess body burden is only slowly mobilized from bone and other relatively stable body stores and excreted. Consequently, a high blood lead level may only represent recent heavy exposure to lead without a significant total body excess and likewise a low blood lead level does not exclude an elevated total body burden of lead.

Also due to its correlation with recent exposures, the blood lead level may vary considerably over short time intervals.

To minimize laboratory error and erroneous results due to contamination, blood specimens must be carefully collected after thorough cleaning of the skin with appropriate methods using lead-free blood containers and analyzed by a reliable laboratory. Under the standard, samples must be analyzed in laboratories which are approved by OSHA. Analysis is to be made using atomic absorption spectrophotometry, anodic stripping voltammetry or any method which meets the accuracy requirements set forth by the standard.

The determination of lead in urine is generally considered a less reliable monitoring technique than analysis of whole blood primarily due to individual variability in urinary excretion capacity as well as the technical difficulty of obtaining accurate 24 hour urine collections. In addition, workers with renal insufficiency, whether due to lead or some other cause, may have decreased lead clearance and consequently urine lead levels may underestimate the true lead burden. Therefore, urine lead levels should not be used as a routine test.

The zinc protoporphyrin test, unlike the blood lead determination, measures an adverse metabolic effect of lead and as such is a better indicator of lead toxicity than the level of blood lead itself. The level of ZPP reflects lead absorption over the preceding 3 to 4 months, and therefore is a better indicator of lead body burden. The ZPP requires more time than the blood lead to read significantly elevated levels; the return to normal after discontinuing lead exposure is also slower. Furthermore, the ZPP test is simpler, faster, and less expensive to perform and no contamination is possible. Many investigators believe it is the most reliable means of monitoring chronic lead absorption.

Zinc protoporphyrin results from the inhibition of the enzyme ferrochelatase which catalyzes the insertion of an iron molecule into the protoporphyrin molecule, which then becomes heme. If iron is not inserted into the molecule then zinc, having a greater affinity for protoporphyrin, takes the place of the iron, forming ZPP.

An elevation in the level of circulating ZPP may occur at blood lead levels as low as 20-30 μg/dl in some workers. Once the blood lead level has reached 40 μg/dl there is more marked rise in the ZPP value from its normal range of less than 100 μg/dl 100 ml. Increases in blood lead levels beyond 40 μg/100 g are associated with exponential increases in ZPP.

Whereas blood lead levels fluctuate over short time spans, ZPP levels remain relatively stable. ZPP is measured directly in red blood cells and is present for the cell's entire 120 day life-span. Therefore, the ZPP level in blood reflects the average ZPP production over the previous 3-4 months and consequently the average lead exposure during that time interval.

It is recommended that a hematocrit be determined whenever a confirmed ZPP of 50 μ g/100 ml whole blood is obtained to rule out a significant underlying anemia. If the ZPP is in excess of 100 μg/100 ml and not associated with abnormal elevations in blood lead levels, the laboratory should be checked to be sure that blood leads were determined using atomic absorption spectrophotometry anodic stripping voltammetry, or any method which meets the accuracy requirements set forth by the standard by an OSHA approved laboratory which is experienced in lead level determinations. Repeat periodic blood lead studies should be obtained in all individuals with elevated ZPP levels to be certain that an associated elevated blood lead level has not been missed due to transient fluctuations in blood leads.

ZPP has a characteristic fluorescence spectrum with a peak at 594 nm which is detectable with a hematofluorimeter. The hematofluorimeter is accurate and portable and can provide on-site, instantaneous results for workers who can be frequently tested via a finger prick.

Careful attention must be given to calibration and quality control procedures. Limited data on blood lead-ZPP correlations and the ZPP levels which are associated with the adverse health effects discussed in subsection (3) are the major limitations of the test. Also it is difficult to correlate ZPP levels with environmental exposure and there is some variation of response with age and sex. Nevertheless, the ZPP promises to be an important diagnostic test for the early detection of lead toxicity and its value will increase as more data is collected regarding its relationship to other manifestations of lead poisoning.

Levels of delta-aminolevulinic acid (ALA) in the urine are also used as a measure of lead exposure. Increasing concentrations of ALA are believed to result from the inhibition of the enzyme delta-aminolevulinic acid dehydrase (ALA-D). Although the test is relatively easy to perform, inexpensive, and rapid, the disadvantages include variability in results, the necessity to collect a complete 24 hour urine sample which has a specific gravity greater than 1.010, and also the fact that ALA decomposes in the presence of light.

The pattern of porphyrin excretion in the urine can also be helpful in identifying lead intoxication. With lead poisoning, the urine concentrations of coproporphyrins I and II, porphobilinogen and uroporphyrin I rise. The most important increase, however, is that of coproporphyrin III; levels may exceed 5,000 μg/l in the urine in lead poisoned individuals, but its correlation with blood lead levels and ZPP are not as good as those of ALA. Increases in urinary porphyrins are not diagnostic of lead toxicity and may be seen in porphyria, some liver diseases, and in patients with high reticulocyte counts.

Summary. The Washington Industrial Safety and Health Act's standard for inorganic lead in the construction industry places significant emphasis on the medical surveillance of all workers exposed to levels of inorganic lead above 30 $\mu g/m^3$ TWA. The physician has a fundamental role in this surveillance program, and in the operation of the medical removal protection program.

Even with adequate worker education on the adverse health effects of lead and appropriate training in work practices, personal hygiene and other control measures, the physician has a primary responsibility for evaluating potential lead toxicity in the worker. It is only through a careful and detailed medical and work history, a complete physical examination and appropriate laboratory testing that an accurate assessment can be made. Many of the adverse health effects of lead toxicity are either irreversible or only partially reversible and therefore early detection of disease is very important.

This document outlines the medical monitoring program as defined by the occupational safety and health standard for inorganic lead. It reviews the adverse health effects of lead poisoning and describes the important elements of the history and physical examinations as they relate to these adverse effects. Finally, the appropriate laboratory testing for evaluating lead exposure and toxicity is presented.

It is hoped that this review and discussion will give the physician a better understanding of the DOSH standard with the ultimate goal of protecting the health and well-being of the worker exposed to lead under their care.

[Statutory Authority: RCW 49.17.010, .040, .050, and .060. 16-09-085 (Order 15-08), § 296-155-17654, filed 04/19/16, effective 05/20/16. Statutory Authority: Chapter 49.17 RCW. 93-22-054 (Order 93-07), § 296-155-17654, filed 10/29/93, effective 12/10/93.]

PART B-2
HAZARD COMMUNICATION

LAST UPDATED 05/20/2016

WAC 296-155-180 Hazard communication..... 1

WAC 296-155-180 Hazard communication. General.

(1) You must develop and maintain a hazard communication program as required by WAC 296-901-14010, which will provide information to all employees relative to hazardous chemicals or substances to which they are exposed, or may become exposed, in the course of their employment.

[Statutory Authority: RCW 49.17.010, .040, .050, and .060. 16-09-085 (Order 15-08), § 296-155-180, filed 04/19/16, effective 05/20/16. Statutory Authority: RCW 49.17.010, .040, .050, and .060. 14-07-086 (Order 13-08), § 296-155-180, filed 03/18/14, effective 05/01/14. Statutory Authority: RCW 49.17.010, .040, .050. 01-11-038 (Order 99-36), § 296-155-180, filed 05/09/01, effective 09/01/01. Statutory Authority: Chapter 49.17 RCW. 94-16-145, § 296-155-180, filed 8/3/94, effective 9/12/94; 89-11-035 (Order 89-03), § 296-155-180, filed 5/15/89, effective 6/30/89.]

PART C
PERSONAL PROTECTIVE AND LIFE SAVING EQUIPMENT

LAST UPDATED: 05/20/2016

WAC 296-155-200 General requirements for personal protective equipment. 1

WAC 296-155-201 Definitions applicable to this chapter. 4

WAC 296-155-203 Confined spaces. 4

WAC 296-155-20301 Definitions. **4**

WAC 296-155-20307 Confined space work on sewer systems under construction. **6**

WAC 296-155-205 Head protection. 6

WAC 296-155-210 Hearing protection. 7

WAC 296-155-211 Leg protection. 7

WAC 296-155-212 Foot protection. 7

WAC 296-155-215 Eye and face protection. 8

WAC 296-155-220 Respiratory protection. 13

WAC 296-155-235 Working over or adjacent to water. 13

WAC 296-155-240 Sterilization of protective equipment. 14

WAC 296-155-200 General requirements for personal protective equipment.

(1) **Supplying personal protective equipment.**

(a) You must use personal protective equipment (PPE) wherever physical contact, absorption, or inhalation of a hazard could cause any injury or impairment to the function of any part of the body.

These hazards include:

- Hazardous processes;
- Environmental hazards;
- Chemical hazards;
- Radiological hazards; or
- Mechanical irritants.

Note: PPE includes:

- *Protective equipment for eyes, face, head, hearing, and extremities;*
- *Protective clothing;*
- *Respiratory devices; and*
- *Protective shields and barriers.*

(b) You must maintain PPE in a sanitary and reliable condition.

Reference: For requirements on maintaining specific personal protective equipment (PPE), see the following rules.

Chapter 296-842 WAC, Respirators; and
Chapter 296-817 WAC, Hearing loss prevention.

(c) If employees provide their own protective equipment, then you are responsible to make sure the PPE is:

- Adequate;
- Properly maintained; and
- Sanitary.

(d) All personal protective equipment must be of safe design and construction for the work to be performed.

(2) **Minimum clothing requirements.**

(a) You must ensure that employees wear at least:

- A short-sleeved shirt;
- Long pants; and
- Shoes that meet the requirements of WAC 296-155-212, Foot protection.

Definitions:

A **short-sleeved shirt** covers the top of the shoulder and has material extending down the arm. If a short-sleeved shirt has a seam at the end of the shoulder, the material must extend down the arm from the seam.

Long pants have legs that extend past the knee when the wearer stands and leaves no exposed skin on the lower leg.

(b) Where there is a danger of contact with moving parts of machinery, or the work process is such that a hazard exists:

- The clothing of employees must fit closely about the body;
- Dangling neck wear, bracelets, wristwatches, rings, or similar articles must not be worn by employees.

> *Note: For additional related requirements see WAC 296-155-205, Head protection.*

(3) You must require employees to wear appropriate PPE in all operations where:

- There is an exposure to hazardous conditions; or
- WAC 296-155-200, General requirements for personal protective equipment (PPE), indicates a need for using such equipment to reduce the hazards to the employees.

(4) Employees must comply with job safety practices and procedures and PPE requirements that are relevant to the job site.

(5) **High visibility garments.**

(a) During daylight hours, when employees' duties are performed in close proximity to moving vehicles, you must make sure that employees wear a high-visibility safety vest, shirt, or jacket that is fluorescent yellow-green, fluorescent orange-red, or fluorescent red in color. This garment must always be worn as an outer garment.

Definition:

For the purpose of this rule, **hours of darkness** means from one-half hour before sunset to one-half hour after sunrise.

(b) During hours of darkness, when employees' duties are performed in close proximity to moving vehicles, you must make sure that employees wear, at a minimum, a high-visibility safety vest, shirt, or jacket:

- Designed according to ANSI/ISEA 107-1999 Class 2 specifications;
- Worn as an outer garment; and
- Worn to provide 360 degrees of visibility around the employee.

> *Note: A high-visibility garment meets Class 2 specifications if the garment:*
>
> - *Has an ANSI "Class 2" label; or*
> - *Has at least 775 square inches of background material and 201 square inches of retroflective material that encircles the torso and is placed to provide 360 degrees of visibility around the employee.*

Note:

- *Fading and soiling may degrade the high-visibility characteristics of the garments.*
- *ANSI/ISEA 107-1999 is available by:*
  - *Purchasing copies of ANSI/ISEA 107-1999 by writing:*
  - *American National Standards Institute*
    11 West 42nd Street
    New York, NY 10036; or
- *Contacting the ANSI website at* http://web.ansi.org/. *or*
- *Reading a copy of ANSI/ISEA 107-1999 at any Washington state library.*

(6) **Payment for PPE**. Except as provided in (a) through (d) of this subsection, the protective equipment, including PPE used to comply with this chapter must be provided by the employer at no cost to employees.

(a) You are not required to pay for nonspecialty safety-toe protective footwear (including steel-toe shoes or steel-toe boots) and nonspecialty prescription safety eyewear, provided that the employer permits such items to be worn off the job site.

(b) When you provide metatarsal guards and allow the employee, at their request, to use shoes or boots with built-in metatarsal protection, you are not required to reimburse the employee for the shoes or boots.

(c) You are not required to pay for:

- Everyday clothing, such as long-sleeve shirts, long pants, street shoes, and normal work boots.
- Ordinary clothing, skin creams, or other items used solely for protection from weather, such as winter coats, jackets, gloves, parkas, rubber boots, hats, raincoats, ordinary sunglasses, and sunscreen.

(d) The employer must pay for replacement PPE, except when the employee has lost or intentionally damaged the PPE.

(e) Where an employee provides adequate protective equipment they own to meet the requirements of this chapter, you may allow the employee to use it and is not required to reimburse the employee for that equipment. You must not require an employee to provide or pay for their own PPE, unless the PPE is excepted in (a) through (d) of this subsection.

[Statutory Authority: RCW 49.17.010, .040, .050, and .060. 16-09-085 (Order 15-08), § 296-155-200, filed 04/19/16, effective 05/20/16. Statutory Authority: RCW 49.17.010, .040, .050, and .060. 09-05-071 (Order 08-35), § 296-155-200, filed 02/17/09, effective 04/01/09]. Statutory Authority: RCW 49.17.010, .040, .050, and .060. 04-24-089 (Order 04-02), § 296-155-200, filed 12/01/04, effective 01/01/05. Statutory Authority: RCW 49.17.010, [49.17] .040, and [49.17] .050. WSR 01-11-038, § 296-155-200, filed 5/9/01, effective 9/1/01. Statutory Authority: Chapter 49.17 RCW. WSR 94-15-096 (Order 94-07, § 296-155-200, filed 7/20/94, effective 9/20/94. Statutory Authority: RCW 49.17.040and 49.17.050. WAS 86-03 (Order 86-14), § 296-155-200, filed 1/21/86; Order 76-29, § 296-155-200, filed 9/30/76, Order 74-26, § 296-155-200, filed 5/7/74, effective 6/6/74.]

WAC 296-155-201 Definitions applicable to this chapter.

Catenary life line A horizontal rope between two fixed anchorages, independent of the work surface, to which the lanyard is attached, either by tying or by means of a sliding connection. A catenary life line must be capable of supporting a minimum dead weight of 5,400 pounds per person, applied at the midpoint of the line.

Contaminant. Any material which by reason of its action upon, within, or to a person or object is likely to cause physical harm.

Dropline. A vertical rope from a fixed anchorage, independent of the work surface, to which the lanyard is affixed or tied.

Fixed anchorage. A secure point of attachment, not a part of the work surface, for droplines, lifelines, catenary life lines, or lanyards. The fixed anchorage and its appurtenances must be capable of supporting a minimum dead weight of 5,400 pounds per worker.

Lanyard. A rope, suitable for supporting one person. One end is fastened to a safety belt or harness and the other end is secured to a substantial object or a safety line.

Lifeline. A rope, suitable for supporting one person, to which a lanyard or safety belt (or harness) is attached.

O.D.. Optical density and refers to the light refractive characteristics of a lens.

Radiant energy. Energy that travels outward in all directions from its source.

Safety belt. A device, usually worn around the waist which, by reason of its attachment to a lanyard and lifeline or a structure, will prevent a worker from falling.

[Statutory Authority: RCW 49.17.010, .040, .050, and .060. 16-09-085 (Order 15-08), § 296-155-201, filed 04/19/16, effective 05/20/16. Statutory Authority: RCW 49.17.040 and 49.17.050. 86-03-074 (Order 86-14), § 296-155-201, filed 1/21/86; Order 76-6, § 296-155-201, filed 3/1/76.]

WAC 296-155-203 Confined spaces.

All work conducted in a confined space must comply with the provisions of chapter 296-809 WAC, Confined spaces and the following sections.

[Statutory Authority: RCW 49.17.010, .040, .050, and .060. 16-09-085 (Order 15-08), § 296-155-203, filed 04/19/16, effective 05/20/16. Statutory Authority: Chapter 49.17 RCW. 94-15-096 (Order 94-07), § 296-155-203, filed 7/20/94, effective 9/20/94. Statutory Authority: RCW 49.17.040 and 49.17.050. 86-03-074 (Order 86-14), § 296-155-203, filed 1/21/86.]

WAC 296-155-20301 Definitions.

C**onfined space**. A space that:

(1) Is large enough and so configured that an employee can bodily enter and perform assigned work; and

(2) Has limited or restricted means for entry or exit (for example, tanks, vessels, silos, storage bins, hoppers, vaults, and pits are spaces that may have limited means of entry); and

(3) Is not designed for continuous employee occupancy.

Corrosives. Substances which in contact with living tissue cause destruction of the tissue by chemical action.

Hazardous atmosphere. An atmosphere that may expose employees to the risk of death, incapacitation, impairment of ability to self-rescue (that is, escape unaided from a permit space), injury, or acute illness from one or more of the following causes:

(1) Flammable gas, vapor, or mist in excess of 10% of its lower flammable limit (LFL);

(2) Airborne combustible dust at a concentration that meets or exceeds its LFL;

> *Note: This concentration may be approximated as a condition in which the dust obscures vision at a distance of 5 feet (1.52m) or less.*

(3) Atmospheric oxygen concentration below 19.5% or above 23.5 %;

(4) Atmospheric concentration of any substance for which a dose or a permissible exposure limit is published in chapter 296-62 WAC, general occupational health standards, or chapter 296-841 WAC, Airborne contaminants, and which could result in employee exposure in excess of its dose or permissible exposure limit;

> *Note: An atmospheric concentration of any substance that is not capable of causing death, incapacitation, impairment of ability to self-rescue, injury, or acute illness due to its health effects is not covered by this provision.*

(5) Any other atmospheric condition that is immediately dangerous to life or health.

> *Note: For air contaminants for which DOSH has not determined a dose or permissible exposure limit, other sources of information, such as safety data sheets that comply with the Hazard Communication Standard, WAC 296-901-140, published information, and internal documents can provide guidance in establishing acceptable atmospheric conditions.*

Irritants. Substances which on immediate, prolonged, or repeated contact with normal living tissue will induce a local inflammatory reaction.

Oxygen deficient atmospheres. Atmospheres at sea level having less than 19.5% oxygen by volume or having a partial pressure of 148 millimeters of mercury or less. This may deviate when working at higher altitudes and should be determined for an individual location. Factors such as acclimatization, physical condition of persons involved, etc., must be considered for such circumstances and conditions. (See chapter 296-809 WAC, Confined Spaces.)

Toxicants. Substances which have the inherent capacity to produce personal injury or illness to persons by absorption through anybody surface.

[Statutory Authority: RCW 49.17.010, .040, .050, and .060. 16-09-085 (Order 15-08), § 296-155-2030`, filed 04/19/16, effective 05/20/16. Statutory Authority: RCW 49.17.010, .040, .050, and .060. 14-07-086 (Order 13-08), § 296-155-20301, filed 03/18/14, effective 05/01/14. Statutory Authority: RCW 49.17.010, .040, .050, and .060. 07-05-062, 07-06-005 (Order 06-38), § 296-155-20301, filed 02/20/07, effective 04/01/07. Statutory Authority: RCW 49.17.010, .040, .050, and .060. 05-03-093 (Order 04-41), § 296-155-20301, filed 01/18/05, effective 03/01/05. Statutory Authority: RCW 49.17.010, .040, .050. 01-11-038 (Order 99-36), § 296-155-20301, filed 05/09/01, effective 09/01/01. Statutory Authority: Chapter 49.17 RCW. 95-17-036 (Order 95-04), 296-155-20301, filed 8/9/95, effective 9/25/95; 95-04-007, § 296-155-20301, filed 1/18/95, effective 3/1/95; 91-24-017 (Order 91-07), § 296-155-20301, filed 11/22/91, effective 12/24/91. Statutory Authority: RCW 49.17.040 and 49.17.050. 86-03-074 (Order 86-14), § 296-155-20301, filed 1/21/86.]

WAC 296-155-20307 Confined space work on sewer systems under construction.

New systems under construction or new installations which have not yet been connected to a used system, may substitute forced ventilation for the testing requirements of chapter 296-809 WAC, provided:

(1) Ventilation is effectively provided at least 5 minutes prior to entry into the confined space;

(2) Ventilation is provided, as required by WAC 296-62-13610 et seq., which supplies a continuous flow of air;

(3) Ventilation exhaust is discharged so as to present no hazard to other employees;

(4) An attendant is provided at the surface when there are employees in the manhole or pipe. The attendant must not leave the manhole unattended until such time as all employees are out and the cover has been replaced; and

(5) All other requirements for confined spaces are observed. See chapter 296-809 WAC.

[Statutory Authority: RCW 49.17.010, .040, .050, and .060. 16-09-085 (Order 15-08), § 296-155-20307, filed 04/19/16, effective 05/20/16. Statutory Authority: Chapter 49.17 RCW. 94-15-096 (Order 94-07), § 296-155-20307, filed 7/20/94, effective 9/20/94. Statutory Authority: RCW 49.17.040 and 49.17.050. 86-03-074 (Order 86-14), § 296-155-20307, filed 1/21/86.]

WAC 296-155-205 Head protection.

(1) All employees on any construction site must be provided an individual hard hat which meets all requirements of (a) and (b) of this subsection.

- (a) Hard hats for the protection of employees against impact and/or penetration of falling and flying objects must meet the specifications contained in American National Standards Institute, Z89.1-1969, Safety Requirements for Industrial Head Protection.
- (b) You must provide each employee with head protection that meets any of the following American National Standards Institute (ANSI) for industrial head protection:
  - (i) Z89.1-2009;
  - (ii) Z89.1-2003; or
  - (iii) Z89.1-1997.
- (c) Hard hats for head protection of employees exposed to high voltage electrical shock and burns must meet the specifications contained in American National Standards Institute Z89.2-1971.

(2) All employees must have their individual hard hats on site and readily available at all times.

(3) All employees must wear a hard hat on any construction site whenever there is a potential exposure to danger of flying or falling objects to persons working or occupying the area.

> *Note: The hard hat may be removed whenever there is no potential exposure to a hazard.*

(4) (a) Employees working on asphalt paving crews exposed to extreme temperatures from hot mix and not exposed to falling objects do not have to wear protective hard hats.

(b) Flaggers working with asphalt paving operations must comply with the requirements of WAC 296-155-305.

(5) Caps with metal buttons or metal visors must not be worn around electrical hazards.

(6) Employees working near moving machinery or in locations which present a hair-catching or fire hazard must wear caps, nets or other head and face protection that will completely contain the hair.

[Statutory Authority: RCW 49.17.010, .040, .050, and .060. 16-09-085 (Order 15-08), § 296-155-205, filed 04/19/16, effective 05/20/16. Statutory Authority: RCW 49.17.010, .040, .050, and .060. 09-05-071 (Order 08-35), § 296-155-205, filed 02/17/09, effective 04/01/09]. Statutory Authority: RCW 49.17.010, .040, .050; Chapter 239, Laws of 2000 (ESHB 2647); and Chapter 34.05 RCW. 01-04-015 (Order 00-03), § 296-155-205, filed 01/26/01, effective 02/28/01. Statutory Authority: Chapter 49.17 RCW. 91-11-070 (Order 91-01), § 296-155-205, filed 5/20/91, effective 6/20/91; 89-11-035 (Order 89-03), § 296-155-205, filed 5/15/89, effective 6/30/89. Statutory Authority: RCW 49.17.040 and 49.17.050. 86-03-074 (Order 86-14), § 296-155-205, filed 1/21/86; Order 74-26, § 296-155-205, filed 5/7/74, effective 6/6/74.]

WAC 296-155-210 Hearing protection.

The hearing protection requirements of chapter 296-817 WAC, Hearing loss prevention (noise), apply.

Statutory Authority: RCW 49.17.010, .040, .050, and .060. 03-11-060 (Order 02-16), § 296-155-210, filed 05/19/03, effective 08/01/03. Statutory Authority: RCW 49.17.040 and 49.17.050. 83-24-013 (Order 83-34), § 296-155-210, filed 11/30/83; Order 74-26, § 296-155-210, filed 5/7/74, effective 6/6/74.]

WAC 296-155-211 Leg protection.

Employees whose duties require them to operate a power chain saw must wear flexible ballistic nylon pads, sewn or otherwise fastened into the trousers, or other equivalent protection that will protect the vulnerable areas of the legs.

[Statutory Authority: RCW 49.17.010, .040, .050, and .060. 16-09-085 (Order 15-08), § 296-155-211, filed 04/19/16, effective 05/20/16. Statutory Authority: RCW 49.17.040 and 49.17.050. 86-03-074 (Order 86-14), § 296-155-211, filed 1/21/86.]

WAC 296-155-212 Foot protection.

(1) Substantial footwear, made of leather or other equally firm material, must be worn by employees in any occupation in which there is a danger of injury to the feet through falling or moving objects, or from burning, scalding, cutting, penetration, or like hazard.

(a) The soles and heels of such footwear must be of a material that will not create a slipping hazard.

(b) Shoes made of leather or other firm materials that have soft athletic-type soles which would protect employees from foot injuries and at the same time, provide soft and firm footing while working under specialty requirements or with specialty materials are acceptable if meeting safety shoe requirements established by OSHA or ANSI.

(c) Footwear that has deteriorated to a point where it does not provide the required protection must not be used.

(2) Calks or other suitable footwear, which will afford reasonable protection from slipping, must be worn while working on logs, poles, pilings, or similar forest products.

(3) Traditional tennis shoes, shoes with canvas tops, or thin or soft soled athletic shoes, open toed sandals, slippers, dress shoes or other similar type shoes must not be worn. Soft or athletic-type soles with uppers of leather or other substantial material may be used where firm footing is desired and where minimal danger of injury to feet from falling or moving objects.

(4) Safety-toe footwear for employees must meet the requirements and specifications in American National Standard for Men's Safety-Toe Footwear, Z41.1-1967.

[Statutory Authority: RCW 49.17.010, .040, .050, and .060. 16-09-085 (Order 15-08), § 296-155-212, filed 04/19/16, effective 05/20/16. Statutory Authority: Chapter 49.17 RCW. 94-15-096 (Order 94-07), § 296-155-212, filed 7/20/94, effective 9/20/94; 89-11-035 (Order 89-03), § 296-155-212, filed 5/15/89, effective 6/30/89. Statutory Authority: RCW 49.17.040 and 49.17.050. 86-03-074 (Order 86-14), § 296-155-212, filed 1/21/86; Order 74-26, § 296-155-212, filed 5/7/74, effective 6/6/74.]

WAC 296-155-215 Eye and face protection.

(1) **General.**

(a) Employees must use eye and face protection equipment when machines or operations present potential eye or face injury from physical, chemical, or radiation agents.

(b) Eye and face protection equipment required by this part must meet the requirements specified in American National Standards Institute, Z87.1-1968, Practice for Occupational and Educational Eye and Face Protection.

(c) Employees whose vision requires the use of corrective lenses in spectacles, when required by this regulation to wear eye protection, must be protected by goggles or spectacles of one of the following types:

(i) Spectacles whose protective lenses provide optical correction;

(ii) Goggles that can be worn over corrective spectacles without disturbing the adjustment of the spectacles.

(iii) Goggles that incorporate corrective lenses mounted behind the protective lenses.

(d) Face and eye protection equipment must be kept clean and in good repair. The use of this type equipment with structural or optical defects must be prohibited.

(e) Table C-1 must be used as a guide in the selection of face and eye protection for the hazards and operations noted.

(f) Protectors must meet the following minimum requirements:

(i) They must provide adequate protection against the particular hazards for which they are designed.

(ii) They must be reasonably comfortable when worn under the designated conditions.

(iii) They must fit snugly and must not unduly interfere with the movements of the wearer.

(iv) They must be durable.

(v) They must be capable of being disinfected.

(vii) They must be easily cleanable.

(g) Every protector must be distinctly marked to facilitate identification only of the manufacturer.

(h) When limitations or precautions are indicated by the manufacturer, they must be transmitted to the user and care taken to see that such limitations and precautions are strictly observed.

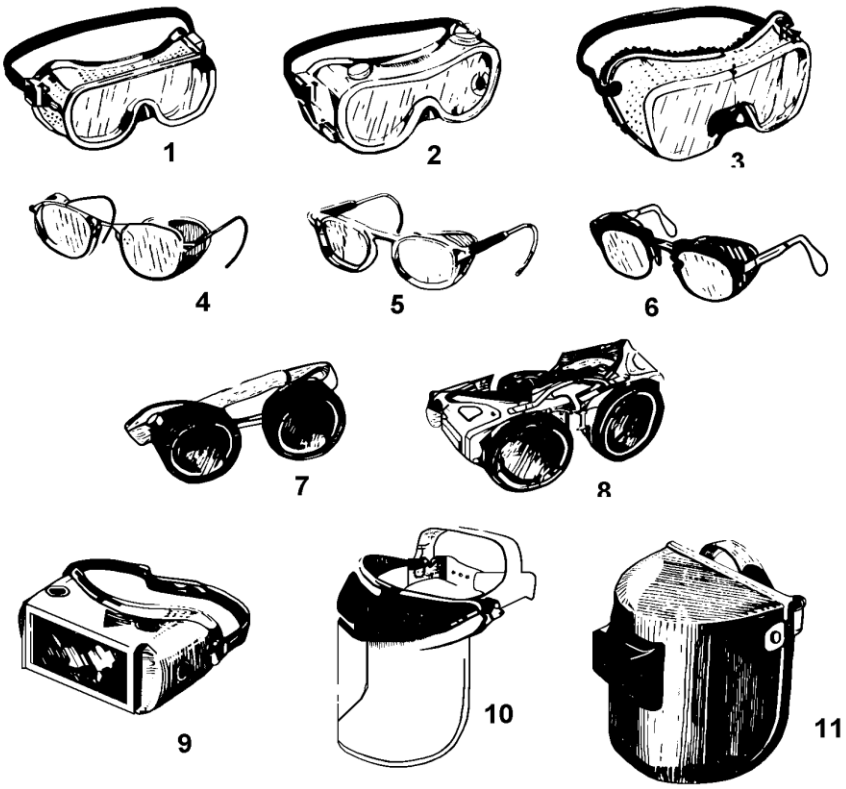

Table C-1 Eye and Face Protection Selection Guide	
1.	GOGGLES, flexible fitting, regular ventilation
2.	GOGGLES, flexible fitting, hooded ventilation
3.	GOGGLES, cushioned fitting, rigid body
*4.	SPECTACLES, metal frame, with sideshields
*5.	SPECTACLES, plastic frame with sideshields
*6.	SPECTACLES, metal-plastic frame, with sideshields
**7.	WELDING GOGGLES, eyecup type, tinted lenses (illustrated)
7A.	CHIPPING GOGGLES, eyecup type, clear safety lenses (not illustrated)
**8.	WELDING GOGGLES, coverspec type tinted lenses (illustrated)
8A.	CHIPPING GOGGLES, coverspec type, clear safety lenses (not illustrated)
**9.	WELDING GOGGLES, coverspec type, tinted plate lens
10.	FACE SHIELD (available with plastic or mesh window)
11.	WELDING HELMETS
*	Nonside shield spectacles are available for limited hazard use requiring only frontal protection.
**	See Table C-2 in (2) of this section, Filter lens shade numbers for protection against radiant energy.

Applications		
OPERATION	**HAZARDS**	**RECOMMENDED PROTECTORS:** **Underscored Numbers Signify Preferred Protection**
ACETYLENE-BURNING ACETYLENE-CUTTING ACETYLELE-WELDING	SPARKS, HARMFUL RAYS, MOLTEN METAL, FLYING PARTICLES	7,8,9
CHEMICAL HANDLING	SPLASH, ACID BURNS, FUMES	2,10 (for severe exposure and 10 over 2)
CHIPPING ELECTRIC (ARC) WELDING	FLYING PARTICLES SPARKS, INTENSE RAYS, MOULTEN METAL	1,3,4,5,6,7A, 8A 9,11 (11 in combination with 4,5,6 in tinted lenses, advisable)
FURNACE OPERATIONS	GLARE, HEAT MOLTEN METAL	7,8,9 (for severe exposure add 10)

Applications (Continued)		
OPERATION	**HAZARDS**	**RECOMMENDED PROTECTORS:** **Underscored Numbers Signify Preferred Protection**
GRINDING LIGHT	FLYING PARTICLES	1,3,4,5,6,10
GRINDING HEAVE	FLYING PARTICLES	1,3,7A, 8A (for severe exposure add 10)
LABORATORY	CHEMICAL SPLASH GLASS BREAKAGE	2 (10 when in combination with 4,5,6)
MACHINING	FLYING PARTICLES	1,3,4,5,6,10
MOLTEN METALS	HEAT, GLARE SPARKS, SPLASH	7,8 (10 in combination with 4,5,6, in tinted lenses)
SPOT WELDING	FLYING PARTICLES SPARKS	1,3,4,5,6,10

(2) **Protection against radiant energy**. (a) Selection of shade numbers for welding filter. Table C-2 must be used as a guide for the selection of the proper shade numbers of filter lenses or plates used in welding. Shades more dense than those listed may be used to suit the individual's needs.

TABLE C-2 Filter Lens Shade Numbers for Protection Against Radiant Energy	
Welding Operation	**Shade Number**
Shielded metal-arc welding 1/16-, 3/32-, 1/8-, 5/32-inch diameter electrodes	10
Gas-shielded arc welding (nonferrous) 1/16-, 3/32-, 1/8-, 5/32-inch diameter electrodes	11
Gas shielded arc welding (ferrous) 1/16-, 3/32-, 1/8-, 5/32-inch diameter electrodes	12
Shielded metal-arc welding 3/16-, 7/32-, 1/4-inch diameter electrodes	12
5/15-, 3/8-inch diameter electrodes	14
Atomic hydrogen welding	10-14
Carbon-arc welding	14
Soldering	2
Torch brazing	3 or 4
Light cutting, up to 1 inch	3 or 4
Medium cutting, 1 inch to 6 inches	4 or 5
Heavy cutting, over 6 inches	5 or 6
Gas welding (light), up to 1/8 inch	4 or 5
Gas welding (medium), 1/8 inch to 1/2 inch	5 or 6
Gas welding (heavy), over ½ inch	6 or 9

(a) Laser protection.

(i) Employees whose occupation or assignment requires potentially hazardous exposure (see WAC 296-62-09005(4)) to laser radiation must wear suitable laser safety goggles which will protect for the specific wavelength of the laser and be of optical density (O.D.) adequate for the energy involved. Table C-3 lists the maximum power or energy density for which adequate protection is afforded by glasses of optical densities from 5 through 8.

Table C-3 Selecting Laser Safety Glass		
Intensity		**Attenuation**
CW maximum power density (watts/cm^2)	Optical Density (O.D.)	Attenuation factor
10^2	5	10^5
10^1	6	10^6
1.0	7	10^7
10.0	8	10^8

Output levels falling between lines in this table must require the higher optical density.

(ii) All protective goggles must bear a label identifying the following data:

(A) The laser wavelengths for which use is intended;

(B) The optical density of those wavelengths.

(C) The visible light transmission.

[Statutory Authority: RCW 49.17.010, .040, .050, and .060. 16-09-085 (Order 15-08), § 296-155-215, filed 04/19/16, effective 05/20/16. Statutory Authority: Chapter 49.17 RCW. 94-15-096 (Order 94-07), § 296-155-215, filed 7/20/94, effective 9/20/94. Statutory Authority: RCW 49.17.040 and 49.17.050. 85-01-022 (Order 84-24), § 296-155-215, filed 12/11/84; Order 74-26, § 296-155-215, filed 5/7/74, effective 6/6/74.]

WAC 296-155-220 Respiratory protection.

The respiratory protection requirements applicable to construction work under this section are identical to those set forth in chapter 296-842 WAC.

[Statutory Authority: RCW 49.17.010, .040, .050, and .060. 05-03-093 (Order 04-41), § 296-155-220, filed 01/18/05, effective 03/01/05. Statutory Authority: RCW 49.17.010, .040, .050. 99-10 (Order 98-10), § 296-155-220, filed 05/04/99, effective 09/01/99. Statutory Authority: RCW 49.17.040 and 49.17.050. 83-15-017 (Order 83-19), § 296-155-220, filed 7/13/83, effective 9/12/83; Order 74-26, § 296-155-220, filed 5/7/74, effective 6/6/74.]

WAC 296-155-235 Working over or adjacent to water.

(1) When an employee is employed under conditions which expose them to a risk of drowning, they must wear a U.S. Coast Guard approved life saving device, unless it can be shown that conditions, such as shallow water, are such that flotation would not be achieved.

(2) Prior to and after each use, the buoyant life saving device must be inspected for defects which would alter their strength or buoyancy. Defective units must not be used.

(3) Ring buoys with at least 90 feet of line must be provided and readily available for emergency rescue operations. Distance between ring buoys must not exceed 200 feet.

(4) At least one lifesaving skiff must be immediately available at locations where employees are working over or adjacent to water. Each skiff, or skiffs, must:

(a) Be suitable for conditions where used.

(b) Be equipped with oar locks securely attached to gunwales, oars, one boat hook, and one cork ring buoy with 50 feet of suitable line attached.

(5) Whenever boats or skiffs cannot be used, due to swift currents, life lines close to the water surface must be provided and, wherever practicable, a line must be stretched across the stream with tag lines.

(6) Where workers are transported by boat or barge, only such number of persons must be carried that can be safely accommodated on fixed seats. Capacity showing number of persons must be plainly marked on vessel.

(7) All workers must be provided with a U.S. Coast Guard approved buoyant life saving device while transported in open boats and/or barges, and where deemed necessary by the department, workers must wear same while in transport.

[Statutory Authority: RCW 49.17.010, .040, .050, and .060. 16-09-085 (Order 15-08), § 296-155-235, filed 04/19/16, effective 05/20/16. Statutory Authority: Chapter 49.17 RCW. 94-15-096 (Order 94-07), § 296-155-235, filed 7/20/94, effective 9/20/94; Order 74-26, § 296-155-235, filed 5/7/74, effective 6/6/74.]

WAC 296-155-240 Sterilization of protective equipment.

Goggles, gloves, respirators and other protectors must not be interchanged among employees for use unless they have been thoroughly cleaned since last use.

[Statutory Authority: RCW 49.17.010, .040, .050, and .060. 16-09-085 (Order 15-08), § 296-155-240, filed 04/19/16, effective 05/20/16. Order 74-26, § 296-155-240, filed 5/7/74, effective 6/6/74.]

PART C-1
FALL PROTECTION REQUIREMENTS FOR CONSTRUCTION

LAST UPDATED: 05/20/2016

WAC 296-155-24601 Scope and application. 1

WAC 296-155-24603 Definitions. 1

WAC 296-155-24605 General requirements. 5

WAC 296-155-24607 Fall protection required regardless of height. 7

WAC 296-155-24609 Fall protection required at four feet or more. 7

WAC 296-155-24611 Fall protection required at ten feet or more. 11

WAC 296-155-24613 Fall arrest specifications. 13

WAC 296-155-24615 Fall restraint specifications. 17

WAC 296-155-24617 Positioning device system specifications. 22

WAC 296-155-24619 Other specifications. 23

WAC 296-155-24621 Training. 25

WAC 296-155-24623 Appendix A-Determining roof widths-Nonmandatory guidelines for complying with WAC 296-155-24615. 25

WAC 296-155-24624 Appendix B-Calculating fall clearance distance using a shock-absorbing lanyard and D-ring anchorage connector-Nonmandatory guidelines for complying with WAC 296-155-24613 (1)(d). 31

WAC 296-155-24601 Scope and application.

Chapter 296-155 WAC, Part C-1 sets forth requirements for employers to provide and enforce the use of fall protection for employees performing activities covered under this chapter.

> *Note: Additional standards requiring fall protection include:*
>
> *Chapter 296-869 WAC, vehicle mounted aerial platforms, and boom supported elevating work platforms.*
> *Chapter 296-874 WAC, Scaffolds.*
> *Chapter 296-876 WAC, Ladders, portable and fixed.*
> *Chapter 296-155 WAC, Part J: Stairways; Part L: Cranes, rigging, and personnel lifting; Part M: Pile driving; Part O: Placing and removal of forms, and vertical slip forms; Part P: Steel erection temporary floors.*

[Statutory Authority: RCW 49.17.010, .040, .050, and .060. 13-04-073 (Order 06-08), § 296-155-24601, filed 02/04/13, effective 04/01/13.]

WAC 296-155-24603 Definitions.

Affected area. The distance away from the edge of an excavation equal to the depth of the excavation up to a maximum distance of 15 feet. For example, an excavation 10 feet deep has an affected area extending 10 feet from the edge of any side of the excavation.

Anchorage. A secure point of attachment for lifelines, lanyards, or deceleration devices which is capable of withstanding the forces specified in this part.

Catch platform. A type of fall arrest system that consists of a platform installed within four vertical feet of the fall hazard, is at least 45 inches wide and is equipped with a standard guardrail system on all exposed sides.

Catenary line - See horizontal lifeline.

Competent person. An individual knowledgeable of fall protection equipment, including the manufacturer's recommendations and instructions for the proper use, inspection, and maintenance; and who is capable of identifying existing and potential fall hazards; and who has the authority to take prompt corrective action to eliminate those hazards; and who is knowledgeable of the rules contained in this part regarding the installation, use, inspection, and maintenance of fall protection equipment and systems.

Connector. A device which is used to connect parts of the personal fall arrest system and positioning device systems together. It may be an independent component of the system, such as a carabiner, or it may be an integral component of part of the system (such as a buckle or D-ring sewn into a harness, or a snap hook spliced or sewn to a lanyard or self-retracting lanyard).

Deceleration device. Any mechanism, such as a rope grab, ripstitch lanyard, specifically woven lanyard, tearing or deforming lanyards, automatic self-retracting lifelines/lanyards, etc., which serves to dissipate a substantial amount of energy during a fall arrest, or otherwise limit the energy imposed on an employee during fall arrest.

Deceleration distance. The additional vertical distance a falling employee travels, excluding lifeline elongation and free fall distance, before stopping, from the point at which the deceleration device begins to operate. It is measured as the distance between the location of an employee's full body harness attachment point at the moment of activation (at the onset of fall arrest forces) of the deceleration device during a fall, and the location of that attachment point after the employee comes to a full stop.

Dropline. A vertical lifeline secured to an upper anchorage for the purpose of attaching a lanyard or device.

Equivalent. Alternative designs, materials, or methods to protect against a hazard which the employer can demonstrate and will provide an equal or greater degree of safety for employees than the methods, materials or designs specified in this standard.

Fall arrest system. A fall protection system that will arrest a fall from elevation. Fall arrest systems include personal fall arrest systems that are worn by the user, catch platforms, and safety nets.

Fall distance. The actual distance from the worker's support to the level where a fall would stop.

Fall protection work plan. A written planning document in which the employer identifies all areas on the job site where a fall hazard of 10 feet or more exists. The plan describes the method or methods of fall protection to be used to protect employees, and includes the procedures governing the installation, use, inspection, and removal of the fall protection method or methods which are selected by the employer. See WAC 296-155-24611(2).

Fall restraint system. A system in which all necessary components function together to restrain/prevent an employee from falling to a lower level. Types of fall restraint systems include standard guardrail systems, personal fall restraint systems, warning line systems, or a warning line system and safety monitor.

Floor hole. An opening measuring less than 12 inches but more than one inch in its least dimension in any floor, roof, platform, or surface through which materials but not persons may fall, such as a belt hole, pipe opening, or slot opening.

Floor opening. An opening measuring 12 inches or more in its least dimension in any floor, roof, platform, or surface through which persons may fall.

Free fall. The act of falling before a personal fall arrest system begins to apply force to arrest the fall.

Free fall distance. The vertical displacement of the fall arrest attachment point on the employee's full body harness between onset of the fall and just before the system begins to apply force to arrest the fall. This distance excludes deceleration distance, and lifeline/lanyard elongation, but includes any deceleration device slide distance or self-retracting lifeline/lanyard extension before they operate and fall arrest forces occur.

Full body harness. A configuration of connected straps that meets the requirements specified in ANSI Z359.1-2007, that may be adjustable to distribute a fall arresting force over at least the thighs, shoulders and pelvis, with provisions for attaching a lanyard, lifeline, or deceleration devices.

Full body harness system. A full body harness and lanyard which is either attached to an anchorage meeting the requirements of this part; or it is attached to a horizontal or vertical lifeline which is properly secured to an anchorage(s) capable of withstanding the forces specified in this part.

Handrail. A rail used to provide employees with a handhold for support.

Hardware. Snap hooks, D-rings, bucklers, carabiners, adjusters, O-rings, that are used to attach the components of a fall protection system together.

Hazardous slope. A slope where normal footing cannot be maintained without the use of devices due to the pitch of the surface, weather conditions, or surface material.

Horizontal lifeline. A rail, rope, wire, or synthetic cable that is installed in a horizontal plane between two anchorages and used for attachment of a worker's lanyard or lifeline device while moving horizontally; used to control dangerous pendulum like swing falls.

Lanyard. A flexible line of webbing, rope, or cable used to secure a positioning harness or full body harness to a lifeline or an anchorage point usually two, 4 or 6 feet long.

Leading edge. The advancing edge of a floor, roof, or formwork which changes location as additional floor, roof, or formwork sections are placed, formed, or constructed.

Lifeline. A vertical line from a fixed anchorage or between two horizontal anchorages, independent of walking or working surfaces, to which a lanyard or device is secured. Lifeline as referred to in this text is one which is part of a fall protection system used as back-up safety for an elevated worker or as a restraint for workers on a flat or sloped surface.

Locking snap hook. A connecting snap hook that requires two separate forces to open the gate; one to deactivate the gatekeeper and a second to depress and open the gate which automatically closes when released; used to minimize roll out or accidental disengagement.

Low pitched roof. A roof having a slope equal to or less than 4 in 12.

Mechanical equipment. All motor or human propelled wheeled equipment except for wheelbarrows, mopcarts, robotic thermoplastic welders and robotic crimpers.

Personal fall arrest system. A fall arrest system that is worn by the employee to arrest the employee in a fall from elevation. It consists of an anchor point, connectors, a full body harness, and may include a lanyard, deceleration device, lifeline, or suitable combinations of these.

Personal fall restraint system. A fall restraint system that is worn by the employee to keep the employee from reaching a fall point, such as the edge of a roof or elevated work surface. It consists of an anchor point, hardware assemblies, a full body harness and may include a lanyard, restraint lines, or suitable combinations of these.

Platform. A work surface elevated above the surrounding floor or ground.

Positioning device system. A full body harness or positioning harness that is worn by an employee, and is rigged to allow an employee to be supported on an elevated vertical or inclined surface, such as a wall, pole or column and work with both hands free from the body support.

Positioning harness. A body support that meets the requirements specified in ANSI Z359.3-2007 that encircles and closes around the waist and legs with attachment elements appropriate for positioning work.

Qualified person. One who, by possession of a recognized degree, certificate, or professional standing, or who by extensive knowledge, training, and experience, has successfully demonstrated his/her ability to solve or resolve problems related to the subject matter, the work, or the project.

Restraint line. A line from a fixed anchorage or between two anchorages to which an employee is secured in such a way as to prevent the worker from falling to a lower level.

Roof. The exterior surface on the top of a building. This does not include floors or formwork which, because a building has not been completed, temporarily become the top surface of a building.

Roofing work. The hoisting, storage, application, and removal of roofing materials and equipment, including related insulation, sheet metal, and vapor barrier work, but not including the construction of the roof deck.

Rope grab. A fall arrester that is designed to move up or down a lifeline suspended from a fixed overhead or horizontal anchorage point, or lifeline, to which the full body harness is attached. In the event of a fall, the rope grab locks onto the lifeline rope through compression to arrest the fall. The use of a rope grab device is restricted for all restraint applications. See WAC 296-155-24615 (1)(f).

Runway. A passageway for persons, elevated above the surrounding floor or ground level, such as a footwalk along shafting or a walkway between buildings.

Safety line - See lifeline.

Safety monitoring system. A type of fall restraint system in which a competent person whose only job responsibility is to recognize and warn employees of their proximity to fall hazards when working between the warning line and the unprotected sides and edges, including the leading edge of a low pitch roof or other walking/working surface.

Safety net system. A type of fall arrest system, as described in WAC 296-155-24613(2).

Safety watch system. A fall protection system as described in WAC 296-155-24615(6), in which a competent person monitors one worker who is engaged in repair work or servicing equipment on low pitch roofs only.

Self-rescue device. A piece of equipment designed to allow a person, who is suspended in a personal fall arrest system, to independently rescue themselves after the fall by moving the device up or down until they reach a surface and are no longer suspended.

Self-retracting lifeline. A deceleration device which contains a wound line which may be slowly extracted from, or retracted onto, the device under slight tension during normal employee movement, and which after onset of a fall, automatically locks the drum and arrests the fall.

Shock absorbing lanyard. A flexible line of webbing, cable, or rope used to secure a full body harness to a lifeline or anchorage point that has an integral shock absorber.

Snap hook - See “locking snap hook.”

Standard guardrail system. A type of fall restraint system that is a vertical barrier consisting of a top rail and mid rail, and toe board when used as falling object protection for persons who may work or pass below, that is erected along all open sides or edges of a walking/working surface, a floor opening, a floor hole, wall opening, ramp, platform, or runway.

Standard strength and construction. Any construction of railings, covers, or other guards that meets the requirements of this part.

Static line - See horizontal lifeline.

Steep pitched roof. A roof having a slope greater than 4 in 12.

Toe board. A vertical barrier at floor level erected along all open sides or edges of a floor opening, platform, runway, ramp, or other walking/working surface to prevent materials, tools, or debris from falling onto persons passing through or working in the area below.

Unprotected sides and edges. Any open side or edge of a floor, roof, balcony/deck, platform, ramp, runway, or walking/working surface where there is no standard guardrail system, or parapet wall of solid strength and construction that is at least 39 inches in vertical height.

Walking/working surface. Any area including, but not limited to, floors, a roof surface, bridge, the ground, and any other surfaces whose dimensions are 45 inches or more in all directions, through which workers can pass or conduct work. A walking/working surface does not include vehicles or rolling stock on which employees must be located in order to perform their job duties.

Wall opening. An opening at least 30 inches high and 18 inches wide, in any wall or partition, through which persons may fall, such as an opening for a window, a yard arm doorway or chute opening.

Warning line system. A barrier erected on a walking and working surface or a low pitch roof (four in twelve or less), to warn employees that they are approaching an unprotected fall hazard(s).

[Statutory Authority: RCW 49.17.010, .040, .050, and .060. 16-09-085 (Order 15-08), § 296-155-24603, filed 04/19/16, effective 05/20/16. Statutory Authority: RCW 49.17.010, .040, .050, and .060. 13-04-073 (Order 06-08), § 296-155-24603, filed 02/04/13, effective 04/01/13.]

WAC 296-155-24605 General requirements.

(1) You must ensure that all surfaces on which employees will be working or walking on are structurally sound and will support them safely prior to allowing employees to work or walk on them.

(2) **Inspection criteria.**

(a) You must inspect all components (including hardware, lanyards, and positioning harnesses or full body harnesses depending on which system is used) of personal fall arrest systems, personal fall restraint systems and positioning device systems prior to each use according to manufacturer's specifications for mildew, wear, damage, and other deterioration. You must remove defective components from service if their function or strength has been adversely affected.

(b) You must inspect safety nets at least once a week according to manufacturer's specifications for wear, damage, and other deterioration. You must also inspect safety nets after any occurrence which could affect the integrity of the safety net system. You must remove defective components from service. You must not use defective nets.

(3) You must only use personal fall arrest systems, personal fall restraint system, positioning device systems, and their components for employee protection and not to hoist materials.

(4) **Exemptions**. Employees are exempt from WAC 296-155-24609 and 296-155-24611 only under the following conditions:

(a) During initial installation of the fall protection anchor (prior to engaging in any work activity), or the disassembly of the fall protection anchor after the work has been completed.

(b) An employee directly involved with inspecting or estimating roof-level conditions only on low pitched roofs prior to the actual start of construction work or after all construction work has been completed.

Examples of activities the department recognizes as inspecting or estimating include:

- Measuring a roof to determine the amount of materials needed for a project.
- Inspecting the roof for damage without removing equipment or components.
- Assessing the roof to determine what method of fall protection will be provided to employees.

Examples the department does not recognize as inspecting or estimating under this exemption include:

- Delivering, staging or storing materials on a roof.
- Persons estimating or inspecting on roofs that would be considered a “hazardous slope” by definition.

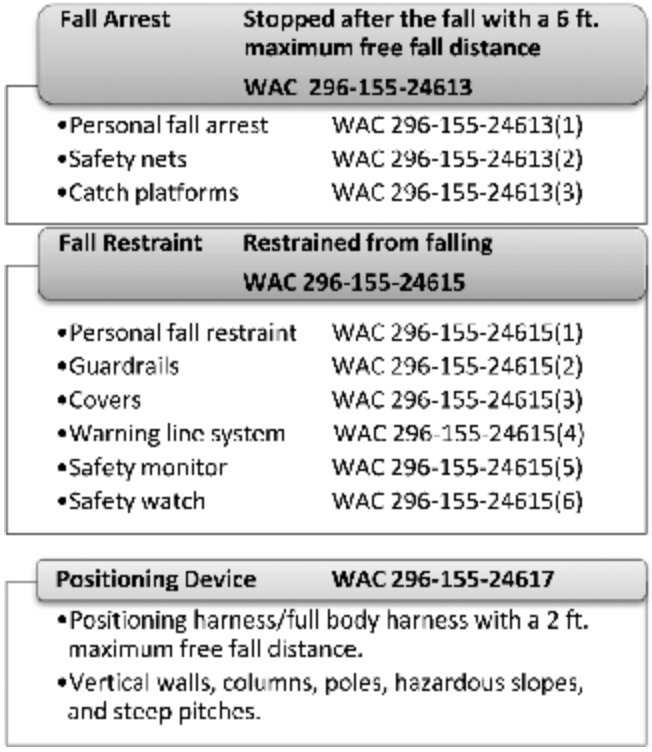

Examples of what personal fall arrest, personal fall restraint and positioning device systems look like:

Fall Arrest

Fall Restraint

Positioning

[Statutory Authority: RCW 49.17.010, .040, .050, and .060. 16-09-085 (Order 15-08), § 296-155-24605, filed 04/19/16, effective 05/20/16. Statutory Authority: RCW 49.17.010, .040, .050, and .060. 13-04-073 (Order 06-08), § 296-155-24605, filed 02/04/13, effective 04/01/13.]

WAC 296-155-24607 Fall protection required regardless of height.

(1) Regardless of height, you must guard open sided floors, walkways, platforms, or runways above or adjacent to dangerous equipment, such as dip tanks and material handling equipment, and similar hazards with a standard guardrail system.

(2) You must guard floor holes or floor openings, into which persons can accidentally walk, by either a standard railing with standard toe board on all exposed sides, or a cover of standard strength and construction that is secured against accidental displacement. While the cover is not in place, you must protect the floor hole opening by a standard railing.

> *Note: Requirements for when guarding floor openings at heights of four feet or more are located in WAC 296-155-24609(4).*

(3) Regardless of height you must protect employees from falling into or onto impalement hazards, such as: Reinforcing steel (rebar), or exposed steel or wood stakes used to set forms.

[Statutory Authority: RCW 49.17.010, .040, .050, and .060. 16-09-085 (Order 15-08), § 296-155-24607, filed 04/19/16, effective 05/20/16. Statutory Authority: RCW 49.17.010, .040, .050, and .060. 13-04-073 (Order 06-08), § 296-155-24607, filed 02/04/13, effective 04/01/13.]

WAC 296-155-24609 Fall protection required at four feet or more.

(1) You must ensure that the appropriate fall protection system is provided, installed, and implemented according to the requirements in this part when employees are exposed to fall hazards of 4 feet or more to the ground or lower level when on a walking/working surface.

(2) Guarding of walking/working surfaces with unprotected sides and edges. You must guard every open sided walking/working surface or platform 4 feet or more above adjacent floor or ground level by one of the following fall protection systems.

(a) A standard guardrail system, or the equivalent, as specified in WAC 296-155-24615(2), on all open sides, except where there is entrance to a ramp, stairway, or fixed ladder. The railing must be provided with a standard toe board wherever, beneath the open sides, persons can pass, there is moving machinery, or there is equipment with which falling materials could create a hazard.

(i) When employees are using stilts, the height of the top rail or equivalent member of the standard guardrail system must be increased (or additional railings may be added) an amount equal to the height of the stilts while maintaining the strength specifications of the guardrail system.

(ii) Where employees are working on platforms above the protection of the guardrail system, the employer must either increase the height of the guardrail system as specified in (a)(i) of this subsection, or select and implement another fall protection system as specified in (b), (c), (d), (e), or (f) of this subsection.

(iii) When guardrails must be temporarily removed to perform a specific task, the area must be constantly attended by a monitor until the guardrail is replaced. The only duty the monitor must perform is to warn persons entering the area of the fall hazard.

(b) A fall restraint system;

(c) A personal fall arrest system;

(d) A safety net system;

(e) A catch platform; and

(f) A warning line.

(3) **Guarding of ramps, runways, and inclined walkways.**

(a) Ramps, runways, and inclined walkways that are 4 feet or more above the ground or lower level must be equipped with a standard guardrail system or the equivalent, as specified in WAC 296-155-24615(2), along each open side. Wherever tools, machine parts, or materials are likely to be used on the runway, a toe board must also be installed on each open side to protect persons working or passing below.

(b) Runways used exclusively for special purposes may have the railing on one side omitted where operating conditions necessitate such omission, provided the falling hazard is minimized by using a runway not less than 18 inches wide.

Note: See WAC 296-155-24619(1) for other specific criteria for ramps, runways, and inclined walkways.

(4) **Guarding of floor openings.**

(a) You must guard floor openings by one of the following fall restraint systems.

(i) A standard guardrail system, or the equivalent, as specified in WAC 296-155-24615(2), on all open sides, except where there is entrance to a ramp, stairway, or fixed ladder. The railing must be provided with a standard toe board wherever, beneath the open sides, persons can pass, or there is moving machinery, or there is equipment with which falling materials could create a hazard.

(ii) A cover, as specified in WAC 296-155-24615(3).

(iii) A warning line system erected at least 15 feet from all unprotected sides or edges of the floor opening and meets the requirements of WAC 296-155-24615(4).

(iv) If it becomes necessary to remove the cover, the guardrail system, or the warning line system, then an employee must remain at the opening until the cover, guardrail system, or warning line system is replaced. The only duty the employee must perform is to prevent exposure to the fall hazard by warning persons entering the area of the fall hazard.

(b) You must guard ladderway floor openings or platforms by a standard guardrail system with standard toe boards on all exposed sides, except at entrance to opening, with the passage through the railing either provided with a swinging gate or so offset that a person cannot walk directly into the opening.

(c) You must guard hatchways and chute floor openings by one of the following:

(i) Hinged covers of standard strength and construction and a standard guardrail system with only one exposed side. When the opening is not in use, the cover must be closed or the exposed side must be guarded at both top and intermediate positions by removable standard guardrail systems.

(ii) A removable standard guardrail system with toe board on not more than two sides of the opening and fixed standard guardrail system with toe boards on all other exposed sides. The removable railing must be kept in place when the opening is not in use and must be hinged or otherwise mounted so as to be conveniently replaceable.

(d) Wherever there is a danger of falling through an unprotected skylight opening, or the skylight has been installed and is not capable of sustaining the weight of a 200 pound person with a safety factor of 4, you must provide standard guardrails on all exposed sides in accordance with WAC 296-155-24615(2) or the skylight must be covered in accordance with WAC 296-155-24615(3). Personal fall arrest equipment may be used as an equivalent means of fall protection when worn by all employees exposed to the fall hazard.

(e) You must guard pits and trap door floor openings by floor opening covers of standard strength and construction. While the cover is not in place, the pit or trap openings must be protected on all exposed sides by removable standard guardrail system.

(f) You must guard manhole floor openings by standard covers which need not be hinged in place. While the cover is not in place, the manhole opening must be protected by standard guardrail system.

(5) **Guarding of wall openings.**

(a) You must guard wall openings, from which there is a fall hazard of 4 feet or more, and the bottom of the opening is less than 39 inches above the working surface, as follows:

(i) When the height and placement of the opening in relation to the working surface is such that either a standard rail or intermediate rail will effectively reduce the danger of falling, one or both must be provided;

(ii) The bottom of a wall opening, which is less than 4 inches above the working surface, regardless of width, must be protected by a standard toe board or an enclosing screen either of solid construction or as specified in WAC 296-155-24615 (2)(c).

(b) An extension platform, outside a wall opening, onto which materials can be hoisted for handling must have standard guardrails on all exposed sides or equivalent. One side of an extension platform may have removable railings in order to facilitate handling materials.

(c) When a chute is attached to an opening, the provisions of subsection (5)(c) of this section apply, except that a toe board is not required.

(6) **Fall protection during form and rebar work**. When exposed to a fall height of 4 feet or more, employees placing or tying reinforcing steel on a vertical face are required to be protected by personal fall arrest systems, safety net systems, or positioning device systems.

(7) **Fall protection on steep pitched and low pitched roofs.**

(a) Steep pitched roofs. Regardless of the work activity, you must ensure that employees exposed to fall hazards of 4 feet or more while working on a roof with a pitch greater than 4 in 12 use one of the following:

(i) Fall restraint system. Safety monitors and warning line systems are prohibited on steep pitched roofs;

(ii) Fall arrest system; or

(iii) Positioning device system.

(b) Low pitched roofs. You must ensure that employees exposed to fall hazards of 4 feet or more while engaged in work, other than roofing work or leading edge work, on low pitched roofs use one of the following:

(i) Fall restraint system;

(ii) Fall arrest system;

(iii) Positioning device system;

(iv) Safety monitor and warning line system; or

(v) Safety watch system.

(8) **Hazardous slopes**. Employees exposed to falls of 4 feet or more while working on a hazardous slope must use personal fall restraint systems or positioning device systems.

[Statutory Authority: RCW 49.17.010, .040, .050, and .060. 16-09-085 (Order 15-08), § 296-155-24609, filed 04/19/16, effective 05/20/16. Statutory Authority: RCW 49.17.010, .040, .050, and .060. 13-04-073 (Order 06-08), § 296-155-24609, filed 02/04/13, effective 04/01/13.]

WAC 296-155-24611 Fall protection required at ten feet or more.

(1) You must ensure that the appropriate fall protection system is provided, installed, and implemented according to the requirements in this part when employees are exposed to fall hazards of 10 feet or more to the ground or lower level, while:

(a) Engaged in roofing work on a low pitched roof;

(b) Constructing a leading edge;

> *Note: Employees not directly involved with constructing the leading edge, or are not performing roofing work must comply with WAC 296-155-24609, Fall protection required at 4 feet or more.*

(c) Working on any surface that does not meet the definition of a walking/working surface not already covered in WAC 296-155-24609;

(d) Engaged in excavation and trenching operations.

(i) Exceptions. Fall protection is not required at excavations when employees are:

(A) Directly involved with the excavation process and on the ground at the top edge of the excavation; or

(B) Working at an excavation site where appropriate sloping of side walls has been implemented as the excavation protective system.

(ii) Fall protection is required for employees standing in or working in the affected area of a trench or excavation exposed to a fall hazard of 10 feet or more and:

(A) The employees are not directly involved with the excavation process; or

(B) The employees are on the protective system or any other structure in the excavation.

Note: Persons considered directly involved in the excavation process include:

- *Foreman of the crew.*
- *Signal person.*
- *Employee hooking on pipe or other materials.*
- *Grade person.*
- *State, county, or city inspectors inspecting the excavation or trench.*
- *An engineer or other professional conducting a quality-assurance inspection.*

(2) **Fall protection work plan**. You must develop and implement a written fall protection work plan including each area of the work place where the employees are assigned and where fall hazards of 10 feet or more exist.

(a) The fall protection work plan must:

(i) Identify all fall hazards in the work area;

(ii) Describe the method of fall arrest or fall restraint to be provided;

(iii) Describe the proper procedures for the assembly, maintenance, inspection, and disassembly of the fall protection system to be used;

(iv) Describe the proper procedures for the handling, storage, and securing of tools and materials;

(v) Describe the method of providing overhead protection for workers who may be in, or pass through the area below the worksite;

(vi) Describe the method for prompt, safe removal of injured workers; and

(vii) Be available on the job site for inspection by the department.

(b) Prior to permitting employees into areas where fall hazards exist you must ensure employees are trained and instructed in the items described in (a)(i) through (vii) of this subsection.

[Statutory Authority: RCW 49.17.010, .040, .050, and .060. 16-09-085 (Order 15-08), § 296-155-24611, filed 04/19/16, effective 05/20/16. Statutory Authority: RCW 49.17.010, .040, .050, and .060. 13-04-073 (Order 06-08), § 296-155-24611, filed 02/04/13, effective 04/01/13.]

WAC 296-155-24613 Fall arrest specifications.

Fall arrest protection must conform to the following provisions:

(1) Personal fall arrest system must meet the following requirements:

(a) You must use a full body harness.

(b) You must immediately remove from service full body harness systems or components subject to impact loading and you must not use them again for employee protection unless inspected and determined by a competent person to be undamaged and suitable for reuse.

(c) Anchorages for full body harness systems must be capable of supporting (per employee):

(i) 3,000 pounds when used in conjunction with:

(A) A self-retracting lifeline that limits the maximum free fall distances to two feet or less; or

(B) A shock absorbing lanyard that restricts the forces on the body to 900 pounds or less.

(ii) 5,000 pounds for all other personal fall arrest system applications, or they must be designed, installed, and used:

(A) As a part of a complete personal fall arrest system which maintains a safety factor of at least two; and

(B) Under the supervision of a qualified person.

(d) When stopping a fall, personal fall arrest systems must:

(i) Be rigged to allow a maximum free fall distance of 6 feet so an employee will not contact any lower level;

(ii) Limit maximum arresting force on an employee to 1,800 pounds (8 kN);

(iii) Bring an employee to a complete stop and limit maximum deceleration distance an employee travels to 3-1/2 feet (1.07 m); and

(iv) Have sufficient strength to withstand twice the potential impact energy of an employee free falling a maximum distance of 6 feet (1.8 m).

Note:

- *Shock absorbers that meet the requirements of ANSI Z359.1-2007 that are used as a part of a personal fall arrest system in accordance with manufacturer's recommendations and instructions for use and installation will limit the maximum arresting forces on an employee's body to 1,800 pounds or less.*
- *To calculate fall clearance distance using a shock absorbing lanyard and D-ring anchorage connector, see WAC 296-155-24624, Appendix B.*

(e) You must protect all safety lines and lanyards against being cut or abraded.

(f) The attachment point of the full body harness must be located in the center of the wearer's back near shoulder level, or above the wearer's head.

(g) Hardware must be drop forged, pressed or formed steel, or made of materials equivalent in strength.

(h) Hardware must have a corrosion resistant finish, and all surfaces and edges must be smooth to prevent damage to the attached full body harness or lanyard.

(i) When vertical lifelines (droplines) are used, not more than one employee must be attached to any one lifeline.

Note: The system strength needs in the following items are based on a total combined weight of employee and tools of no more than 310 pounds. If combined weight is more than 310 pounds, appropriate allowances must be made or the system will not be in compliance. For more information on system testing see WAC 296-24-88050, Appendix C, Part II.

(j) Vertical lifelines (droplines) must have a minimum breaking strength of 5,000 pounds (22.2 kN), except that self-retracting lifelines and lanyards which automatically limit free fall distance to two feet (.61 m) or less must have a minimum breaking strength of 3,000 pounds (13.3 kN).

(k) Horizontal lifelines must be designed, installed, and used, under the supervision of a qualified person, as part of a complete personal fall arrest system, which maintains a safety factor of at least two.

(l) Droplines or lifelines used on rock scaling operations, or in areas where the lifeline may be subjected to cutting or abrasion, must be a minimum of 7/8 inch wire core manila rope or equivalent. For all other lifeline applications, a minimum of 3/4 inch manila rope or equivalent, with a minimum breaking strength of 5,000 pounds, must be used.

(m) Lanyards must have a minimum breaking strength of 5,000 pounds (22.2 kN).

(n) All components of full body harness systems whose strength is not otherwise specified in this subsection must be capable of supporting a minimum fall impact load of 5,000 pounds (22.2 kN) applied at the lanyard point of connection.

(o) D-rings and snap hooks must be proof-tested to a minimum tensile load of 3,600 pounds (16 kN) without cracking, breaking, or taking permanent deformation.

(p) Snap hooks must be a locking type snap hook designed and used to prevent disengagement of the snap hook by the contact of the snap hook keeper by the connected member.

(q) Unless the snap hook is designed for the following connections, snap hooks must not be engaged:

(i) Directly to the webbing, rope or wire rope;

(ii) To each other;

(iii) To a D-ring to which another snap hook or other connector is attached;

(iv) To a horizontal lifeline; or

(v) To any object which is incompatibly shaped or dimensioned in relation to the snap hook such that unintentional disengagement could occur by the connected object being able to depress the snap hook keeper and release itself.

(2) **Safety net systems**. Safety net systems and their use must comply with the following provisions:

(a) Safety nets must be installed as close as practicable under the surface on which employees are working, but in no case more than 30 feet (9.1 m) below such level unless specifically approved in writing by the manufacturer. The potential fall area to the net must be unobstructed.

(b) Safety nets must extend outward from the outermost projection of the work surface as follows:

Vertical distance from working levels to horizontal plane of net	***Minimum required horizontal distance of outer edge of net from the edge of the working surface***
Up to 5 feet	8 feet
More than 5 feet up to 10 feet	10 feet
More than 10 feet	13 feet

(c) You must install safety nets with sufficient clearance under them to prevent contact with the surface or structures below when subjected to an impact force equal to the drop test specified in (d) of this subsection.

(d) Safety nets and their installations must be capable of absorbing an impact force equal to that produced by the drop test.

(i) Except as provided in (d)(ii) of this subsection, safety nets and safety net installations must be drop-tested at the job site after initial installation and before being used as a fall protection system, whenever relocated, after major repair, and at 6-month intervals if left in one place. The drop-test must consist of a 400 pound (180 kg) bag of sand 30 ± two inches (76 ± 5 cm) in diameter dropped into the net from the highest walking/working surface at which employees are exposed to fall hazards, but not from less than 42 inches (1.1 m) above that level.

(ii) When the employer can demonstrate that it is unreasonable to perform the drop-test required by (d)(i) of this subsection, you (or a designated competent person) must certify that the net and net installation is in compliance with (c) and (d)(i) of this subsection by preparing a certification record prior to the net being used as a fall protection system. The certification record must include an identification of the net and net installation for which the certification record is being prepared; the date that it was determined that the identified net and net installation were in compliance with (c) of this subsection and the signature of the person making the determination and certification. The most recent certification record for each net and net installation must be available at the job site for inspection.

(e) You must remove materials, scrap pieces, equipment, and tools which have fallen into the safety net as soon as possible from the net and at least before the next work shift.

(f) The maximum size of each safety net mesh opening must not exceed 36 square inches (230 cm^2) nor be longer than 6 inches (15 cm) on any side, and the opening, measured center-to-center of mesh ropes or webbing, must not be longer than 6 inches (15 cm). All mesh crossings must be secured to prevent enlargement of the mesh opening.

(g) Each safety net (or section of it) must have a border rope or webbing with a minimum breaking strength of 5,000 pounds (22.2 kN).

(h) Connections between safety net panels must be as strong as integral net components and must be spaced not more than 6 inches (15 cm) apart.

(3) **Catch platforms.**

(a) You must install a catch platform within 4 vertical feet of the work area.

(b) The catch platform's width must be a minimum of 45 inches wide and must be equipped with standard guardrails and toe boards on all open sides.

[Statutory Authority: RCW 49.17.010, .040, .050, and .060. 16-09-085 (Order 15-08), § 296-155-24613, filed 04/19/16, effective 05/20/16. Statutory Authority: RCW 49.17.010, .040, .050, and .060. 13-04-073 (Order 06-08), § 296-155-24613, filed 02/04/13, effective 04/01/13.]

WAC 296-155-24615 Fall restraint specifications.

Fall restraint protection must conform to the following provisions:

(1) Personal fall restraint systems must be rigged to allow the movement of employees only as far as the unprotected sides and edges of the walking/working surface, and must consist of:

(a) A full body harness must be used.

(b) The full body harness must be attached to securely rigged restraint lines.

(c) All hardware assemblies for full body harness must be capable of withstanding a tension loading of 4,000 pounds without cracking, breaking, or taking a permanent deformation.

(d) You must ensure component compatibility.

(e) Anchorage points used for fall restraint must be capable of supporting 4 times the intended load.

(f) Rope grab devices are prohibited for fall restraint applications unless they are part of a fall restraint system designed specifically for the purpose by the manufacturer, and used in strict accordance with the manufacturer's recommendations and instructions.

(2) **Guardrail specifications.**

(a) A standard guardrail system must consist of top rail, intermediate rail, and posts, and must have a vertical height of 39 to 45 inches from upper surface of top rail to floor, platform, runway, or ramp level. When conditions warrant, the height of the top edge may exceed the 45 inch height, provided the guardrail system meets all other criteria of this subsection. The intermediate rail must be halfway between the top rail and the floor, platform, runway, or ramp. The ends of the rails must not overhang the terminal posts except where such overhang does not constitute a projection hazard.

(b) Minimum requirements for standard guardrail systems under various types of construction are specified in the following items:

(i) For wood railings, the posts must be of at least two-inch by 4-inch stock spaced not to exceed 8 feet; the top rail must be of at least two-inch by 4-inch stock and each length of lumber must be smooth surfaced throughout the length of the railing. The intermediate rail must be of at least one-inch by 6-inch stock. Other configurations may be used for the top rail when the configuration meets the requirements of (b)(vii) of this subsection.

(ii) For pipe railings, posts and top and intermediate railings must be at least 1 1/2 inches nominal OD diameter with posts spaced not more than 8 feet on centers. Other configurations may be used for the top rail when the configuration meets the requirements of (b)(vii) of this subsection.

(iii) For structural steel railings, posts and top and intermediate rails must be of two-inch by two-inch by 3/8 inch angles or other metal shapes of equivalent bending strength, with posts spaced not more than 8 feet on centers. Other configurations may be used for the top rail when the configuration meets the requirements of (b)(vii) of this subsection.

(iv) For wire rope railings, the top and intermediate railings must meet the strength factor and deflection of (b)(v) of this subsection. The top railing must be flagged at not more than 6 foot intervals with high-visibility material. Posts must be spaced not more than 8 feet on centers. The rope must be stretched taut and must be between 39 and 45 inches in height at all points. Other configurations may be used for the top rail when the configuration meets the requirements of (b)(vii) of this subsection.

(v) The anchoring of posts and framing of members for railings of all types must be of such construction that the completed structure must be capable of withstanding a load of at least 200 pounds applied in any direction at any point on the top rail. The top rail must be between 39 and 45 inches in height at all points when this force is applied.

(vi) Railings receiving heavy stresses from employees trucking or handling materials must be provided additional strength by the use of heavier stock, closer spacing of posts, bracing, or by other means.

(vii) Other types, sizes, and arrangements of railing construction are acceptable, provided they meet the following conditions:

(A) A smooth surfaced top rail at a height above floor, platform, runway, or ramp level between 39 and 45 inches;

(B) When the 200 pound (890 N) load specified in (b)(v) of this subsection is applied in a downward direction, the top edge of the guardrail must not deflect to a height less than 39 inches (1.0 m) above the walking/working level. Guardrail system components selected and constructed in accordance with this part will be deemed to meet this requirement;

(C) Protection between top rail and floor, platform, runway, ramp, or stair treads, equivalent at least to that afforded by a standard intermediate rail;

(D) Elimination of overhang of rail ends unless such overhang does not constitute a hazard.

(c) Toe board specifications.

(i) A standard toe board must be a minimum of 4 inches nominal in vertical height from its top edge to the level of the floor, platform, runway, or ramp. It must be securely fastened in place with not more than one-quarter inch clearance above floor level. It may be made of any substantial material, either solid, or with openings not over one inch in greatest dimension.

(ii) Where material is piled to such height that a standard toe board does not provide protection, paneling, or screening from floor to intermediate rail or to top rail must be provided.

(3) **Cover specifications.**

(a) Floor opening or floor hole covers must be of any material that meets the following strength requirements:

(i) Conduits, trenches, and manhole covers and their supports, when located in roadways, and vehicular aisles must be designed to carry a truck rear axle load of at least two times the maximum intended load;

(ii) All floor opening and floor hole covers must be capable of supporting the maximum potential load but never less than 200 pounds (with a safety factor of 4).

(A) All covers must be secured when installed so as to prevent accidental displacement by the wind, equipment, or employees.

(B) All covers must be color coded or they must be marked with the word “hole” or “cover” to provide warning of the hazard.

(b) Barriers and screens used to cover wall openings must meet the following requirements:

(i) Barriers must be of such construction and mounting that, when in place at the opening, the barrier is capable of withstanding a load of at least 200 pounds applied in any direction (except upward), with a minimum of deflection at any point on the top rail or corresponding member.

(ii) Screens must be of such construction and mounting that they are capable of withstanding a load of at least 200 pounds applied horizontally at any point on the near side of the screen. They may be of solid construction of either grill work with openings not more than 8 inches long, or of slat work with openings not more than 4 inches wide with length unrestricted.

(4) Warning line system specifications on pitches 4 in 12 or less for roofing work, leading edge work, and on low pitched open sided surfaces for work activities other than roofing work or leading edge work. You must ensure the following:

(a) Warning lines must be erected around all unprotected sides and edges of the work area.

(i) Warning lines used during roofing work.

(A) When roofing work is taking place or when mechanical equipment is not being used, the warning line must be erected not less than 6 feet (1.8 m) from the edge of the roof.

(B) When mechanical equipment is being used, the warning line must be erected not less than 6 feet (1.8 m) from the roof edge which is parallel to the direction of mechanical equipment operation, and not less than 10 feet (3.1 m) from the roof edge which is perpendicular to the direction of mechanical equipment operation.

(ii) Warning lines erected for leading edge work. Warning lines must be erected to separate employees who are engaged in leading edge work (between the forward edge of the warning line and the leading edge), from other work areas on the low pitched surface. You must ensure:

(A) The warning line is erected not less than 6 feet nor more than 25 feet from the leading edge; and

(B) When fall arrest systems as described in WAC 296-155-24613, or fall restraint systems as described in subsections (1) and (2) of this section are not used, you must implement a safety monitor system as described in subsection (5) of this section to protect employees engaged in constructing the leading edge who are working between the forward edge of the warning line and the leading edge.

(iii) Warning lines erected on low pitched open sided surfaces for work activities other than roofing work or leading edge work, must be erected not less than 15 feet from the unprotected sides or edges of the open sided surface.

(b) The warning line must consist of a rope, wire, or chain and supporting stanchions erected as follows:

(i) The rope, wire, or chain must be flagged at not more than 6 foot (1.8 m) intervals with high visibility material. Highly visible caution or danger tape as described in (b)(iv) of this subsection, does not need to be flagged.

(ii) The rope, wire, or chain must be rigged and supported in such a way that its lowest point (including sag) is no less than 36 inches from the surface and its highest point is no more than 45 inches from the surface.

(iii) After being erected, with the rope, wire or chain attached, stanchions must be capable of resisting, without tipping over, a force of at least 16 pounds (71 N) applied horizontally against the stanchion, 30 inches (0.76 m) above the surface, perpendicular to the warning line, and in the direction of the unprotected sides or edges of the surface.

(iv) The rope, wire, or chain must have a minimum tensile strength of 200 pounds (90 k), and after being attached to the stanchions, must be capable of supporting, without breaking, the loads applied to the stanchions. Highly visible caution or danger tape may be used in lieu of rope, wire, or chain as long as it is at least 3 inches wide and 3 mils thick, and has a tensile strength of at least 200 pounds.

(v) The line must be attached at each stanchion in such a way that pulling on one section of the line between stanchions will not result in slack being taken up in adjacent sections before the stanchion tips over.

(c) You must erect access paths as follows:

(i) Points of access, materials handling areas, and storage areas must be connected to the work area by a clear access path formed by two warning lines.

(ii) When the path to a point of access is not in use, you must place a rope, wire, or chain, equal in strength and height to the warning line, across the path at the point where the path intersects the warning line erected around the work area.

(5) **Safety monitor system specifications.**

(a) A safety monitor system may be used in conjunction with a warning line system as a method of fall protection during roofing work on low pitched roofs or leading edge work on low pitched surfaces.

Note: The warning line is not required when performing roofing work on low pitched roofs less than 50 feet wide. For information on determining roof widths, see WAC 296-155-24623, Appendix A, determining roof widths.

(b) When selected, you must ensure that the safety monitor system is addressed in the fall protection work plan, including the name of the safety monitor(s) and the extent of their training in both the safety monitor and warning line systems. You must ensure that the following requirements are met:

(i) The safety monitor system must not be used when adverse weather conditions create additional hazards.

(ii) Employees working outside of the warning line system, (between the forward edge of the warning line and the unprotected sides or edges of a low pitched surface), must be readily distinguishable from other members of the crew that are working inside the warning line system by wearing highly visible, distinctive, and uniform apparel.

(iii) Employees must promptly comply with fall hazard warnings from the safety monitor.

(iv) You must train a person acting in the capacity of safety monitor(s) in the function of both the safety monitor and warning line systems, and they must:

(A) Be a competent person as defined in WAC 296-155-24603.

(B) Have control authority over the work as it relates to fall protection.

(C) Be instantly distinguishable over members of the work crew.

(D) Perform no other duties while acting as safety monitor.

(E) Be positioned in relation to the workers under their protection, so as to have a clear, unobstructed view and be able to maintain normal voice communication.

(F) Not supervise more than 8 exposed workers at one time.

(G) Warn the employee when it appears that the employee is unaware of a fall hazard or is acting in an unsafe manner.

(6) **Safety watch system specifications.**

(a) When one employee is conducting any repair work or servicing equipment on a roof that has a pitch no greater than 4 in 12, employers are allowed to use a safety watch system.

(b) Ensure the safety watch system meets the following requirements:

(i) There can only be two people on the roof while the safety watch system is being used: The one employee acting as the safety watch and the one employee engaged in the repair work or servicing equipment;

(ii) The employee performing the task must comply promptly with fall hazard warnings from the safety watch;

(iii) Mechanical equipment is not used; and

(iv) The safety watch system is not used when weather conditions create additional hazards.

(c) Ensure the employee acting as the safety watch meets all of the following:

(i) Is a competent person as defined in WAC 296-155-24603;

(ii) Has full control over the work as it relates to fall protection;

(iii) Has a clear, unobstructed view of the worker;

(iv) Is able to maintain normal voice communication; and

(v) Performs no other duties while acting as the safety watch.

[Statutory Authority: RCW 49.17.010, .040, .050, and .060. 16-09-085 (Order 15-08), § 296-155-24615, filed 04/19/16, effective 05/20/16. Statutory Authority: RCW 49.17.010, .040, .050, and .060. 13-04-073 (Order 06-08), § 296-155-24615, filed 02/04/13, effective 04/01/13.]

WAC 296-155-24617 Positioning device system specifications.

Positioning device systems and their use must conform to the following provisions:

(1) Positioning harnesses or full body harnesses must be used.

(2) Positioning devices must be rigged to prevent an employee from a free fall greater than two feet.

(3) Positioning devices must be secured to an anchorage capable of supporting at least twice the potential impact load of an employee's fall or 3,000 pounds (13.3 kN), whichever is greater.

(4) Connectors must be drop forged, pressed or formed steel, or made of equivalent materials.

(5) Connectors must have a corrosion-resistant finish, and all surfaces and edges must be smooth to prevent damage to interfacing parts of this system.

(6) Connecting assemblies must have a minimum breaking strength of 5,000 pounds (22.2 kN).

(7) D-rings and snap hooks must be proof-tested to a minimum tensile load of 3,600 pounds (16 kN) without cracking, breaking, or taking permanent deformation.

(8) Snap hooks must be a locking type snap hook designed and used to prevent disengagement of the snap hook by the contact of the snap hook keeper by the connected member.

(9) Unless the snap hook is designed for the following connections, snap hooks must not be engaged:

(a) Directly to webbing, rope or wire rope;

(b) To each other;

(c) To a D-ring to which another snap hook or other connector is attached;

(d) To a horizontal lifeline; or

(e) To any object which is incompatibly shaped or dimensioned in relation to the snap hook such that unintentional disengagement could occur by the connected object being able to depress the snap hook keeper and release itself.

[Statutory Authority: RCW 49.17.010, .040, .050, and .060. 16-09-085 (Order 15-08), § 296-155-24617, filed 04/19/16, effective 05/20/16. Statutory Authority: RCW 49.17.010, .040, .050, and .060. 13-04-073 (Order 06-08), § 296-155-24617, filed 02/04/13, effective 04/01/13.]

WAC 296-155-24619 Other specifications.

(1) **Ramps, runways and inclined walkways must:**

(a) Be at least 18 inches wide; and

(b) Not be inclined more than 20 degrees from horizontal and when inclined, they must be cleated or otherwise treated to prevent a slipping hazard on the walking surface.

> *Note: See WAC 296-155-24609(3) for guarding ramps, runways, and inclined walkways that are four feet or more above the ground or lower level.*

(2) **Self-rescue devices**. Self-rescue devices are not a fall protection system. Self-rescue devices used to self-rescue after a fall must meet the following requirements:

(a) Use self-rescue devices according to the manufacturer's instructions; and

(b) Self-rescue devices must be addressed by the fall protection work plan.

(3) **Canopy**. Canopies, when used as falling object protection, must be strong enough to prevent collapse and to prevent penetration by any objects which may fall onto the canopy.

(4) **Roofing bracket specifications**. Roofing brackets are not a fall protection system.

(a) Roofing brackets must be constructed to fit the pitch of the roof.

(b) In addition to securing brackets using the pointed metal projections, brackets must also be secured in place by nailing. When it is impractical to nail brackets, rope supports must be used. When rope supports are used, they must consist of first grade manila of at least 3/4 inch diameter, or equivalent.

(5) **Crawling board and chicken ladder specifications**. Crawling boards and chicken ladders are not fall protection systems.

(a) Crawling boards must be not less than 10 inches wide and one inch thick, having cleats one by 1 1/2inches.

(i) The cleats must be equal in length to the width of the board and spaced at equal intervals not to exceed 24 inches.

(ii) Nails must be driven through and clinched on the underside.

(iii) The crawling board must extend from the ridge pole to the eaves when used in connection with roof construction, repair, or maintenance.

(b) Crawling boards must be secured to the roof using ridge hooks or other equivalent means.

(6) **Roof edge materials handling areas and materials storage specifications.**

(a) When guardrails are used at hoisting areas, a minimum of 4 feet of guardrail must be erected along each side of the access point through which materials are hoisted.

(b) A chain or gate must be placed across the opening between the guardrail sections when hoisting operations are not taking place.

(c) When guardrails are used at bitumen pipe outlet, a minimum of 4 feet of guardrail must be erected along each side of the pipe.

(d) Mechanical equipment must be used or stored only in areas where employees are protected using a fall arrest system as described in WAC 296-155-24613, or a fall restraint system as described in WAC 296-155-24615 (1), (2), or (4). Mechanical equipment may not be used or stored where the only protection is provided by the use of a safety monitor.

(e) The hoist must not be used as an attachment/anchorage point for fall arrest or fall restraint systems.

(f) Materials must not be stored within 6 feet of the roof edge unless guardrails are erected at the roof edge. Guardrails must include a toe board if employees could be working or passing below.

[Statutory Authority: RCW 49.17.010, .040, .050, and .060. 16-09-085 (Order 15-08), § 296-155-24619, filed 04/19/16, effective 05/20/16. Statutory Authority: RCW 49.17.010, .040, .050, and .060. 13-04-073 (Order 06-08), § 296-155-24619, filed 02/04/13, effective 04/01/13.]

WAC 296-155-24621 Training.

(1) All training required by this part, must be documented and documentation kept on file.

(2) **Retraining**. When the employer has reason to believe that any affected employee who has already been trained does not have the understanding and skill required by subsection (1) of this section, you must retrain each such employee. Circumstances where retraining is required include, but are not limited to, situations where:

- Changes in the workplace render previous training obsolete; or
- Changes in the types of fall protection systems or equipment to be used render previous training obsolete; or
- Inadequacies in an affected employee's knowledge or use of fall protection systems or equipment indicate that the employee has not retained the requisite understanding or skill.

[Statutory Authority: RCW 49.17.010, .040, .050, and .060. 16-09-085 (Order 15-08), § 296-155-24621, filed 04/19/16, effective 05/20/16. Statutory Authority: RCW 49.17.010, .040, .050, and .060. 13-04-073 (Order 06-08), § 296-155-24621, filed 02/04/13, effective 04/01/13.]

WAC 296-155-24623 Appendix A-Determining roof widths-Nonmandatory guidelines for complying with WAC 296-155-24615.

(1) This appendix serves as a guideline to assist employers complying with the requirements of WAC 296-155-24615 which allows the use of a safety monitoring system alone as a means of providing fall protection during the performance of roofing operations on low-sloped roofs 50 feet (15.25 m) or less in width. Each example in the appendix shows a roof plan or plans and indicates where each roof or roof area is to be measured to determine its width. Section views or elevation views are shown where appropriate. Some examples show “correct” and “incorrect” subdivisions of irregularly shaped roofs divided into smaller, regularly shaped areas. In all examples, the dimension selected to be the width of an area is the lesser of the two primary dimensions of the area, as viewed from above. Example A shows a simple rectangular roof. The width is the lesser of the two primary overall dimensions, which is also the case with roofs sloped toward or away from the roof center, as shown in Example B.

(2) Many roofs are not simple rectangles. Such roofs may be broken down into subareas as shown in Example C. The process of dividing a roof area can produce many different configurations. Example C gives the general rule of using dividing lines of minimum length to minimize the size and number of the areas which are potentially less than 50 feet (15.25 m) wide. The intent is to minimize the number of roof areas where safety monitoring systems alone are sufficient protection.

(3) Roofs which are comprised of several separate, noncontiguous roof areas, as in Example D, may be considered as a series of individual roofs. Some roofs have penthouses, additional floors, courtyard openings, or similar architectural features; Example E shows how the rule for dividing roofs into subareas is applied to such configurations. Irregular, nonrectangular roofs must be considered on an individual basis, as shown in Example F.

Example A
Rectangular Shaped Roof

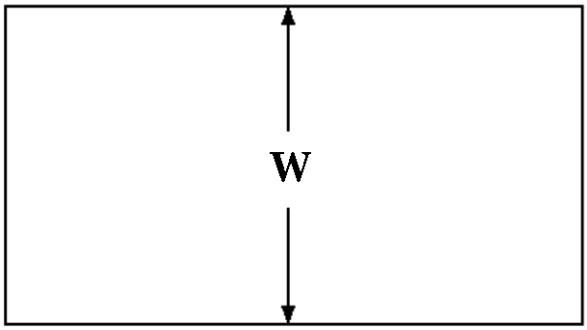

PLAN VIEW

Example B
Sloped Rectangular Shaped Roofs

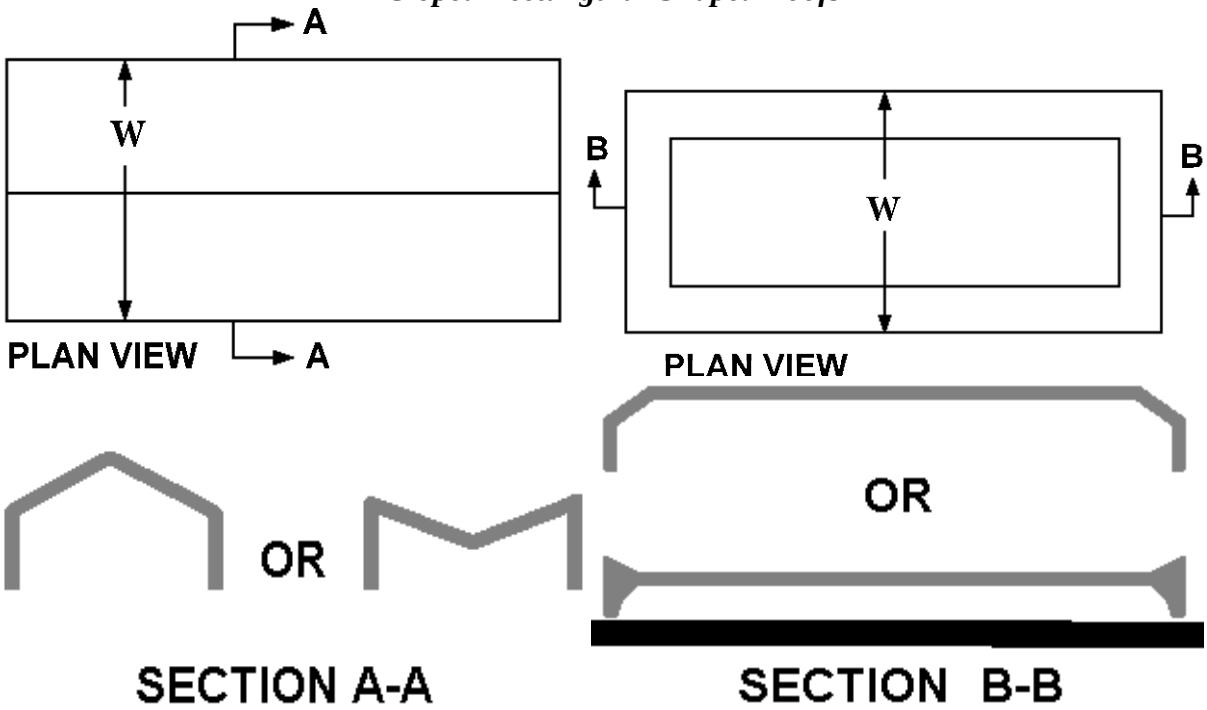

Example C
Irregularly Shaped Roofs With Rectangular Shaped Sections

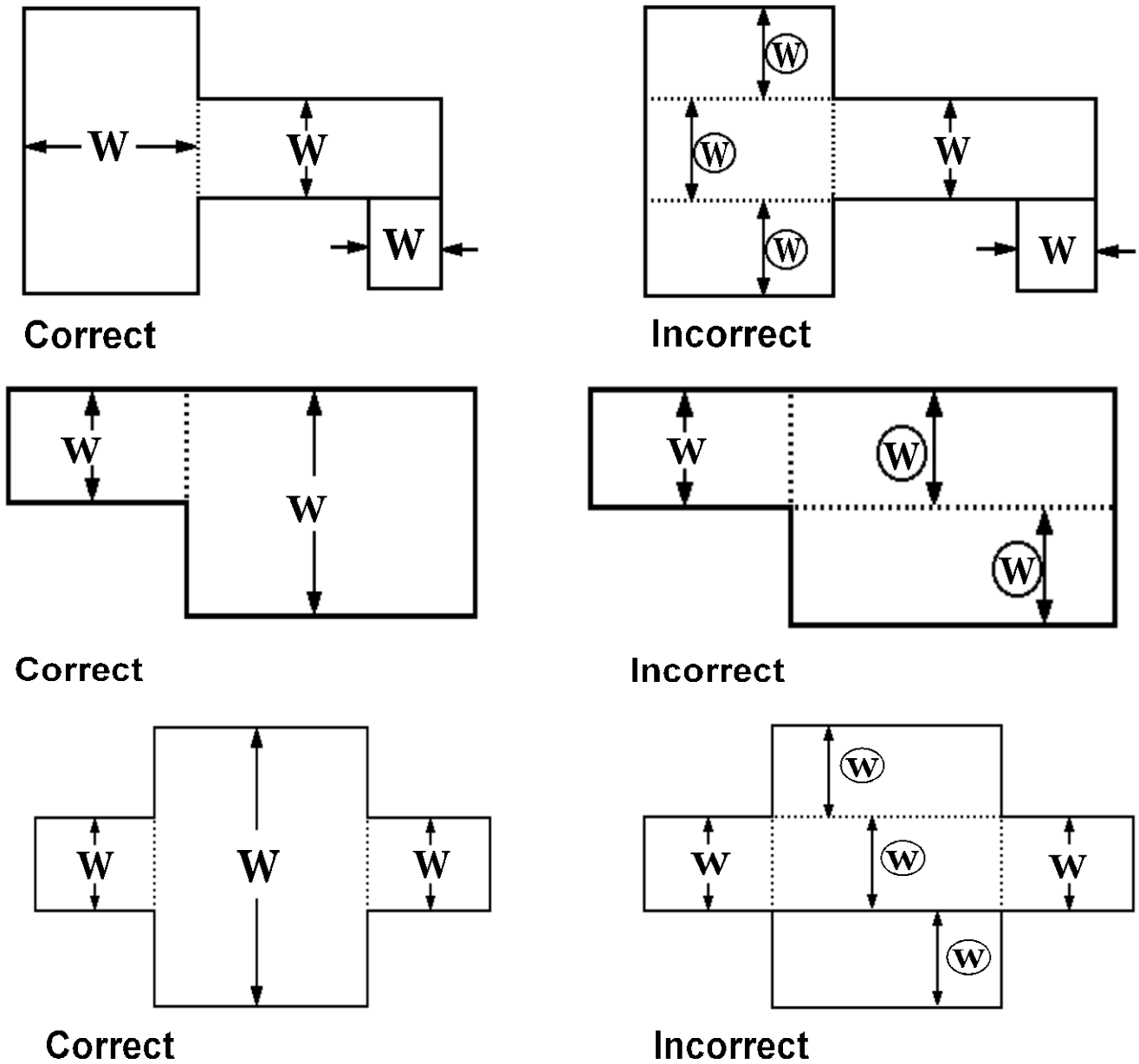

Such roofs are to be divided into subareas by using dividing lines of minimum length to minimize the size and number of the areas which are potentially less than or equal to 50 feet (15.25 meters) in width, in order to limit the size of roof areas where the safety monitoring system alone can be used (WAC 296-155-24515(2)(b)). Dotted lines are used in the examples to show the location of dividing lines.

Ⓦ denotes incorrect measurements of width.

Example D
Separate, Non-Contiguous Roof Areas

1.

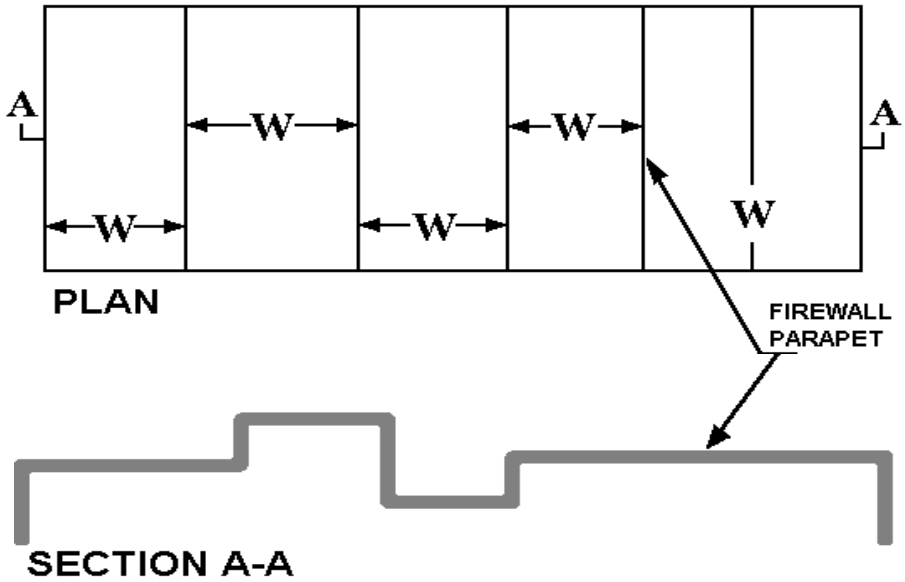

2.

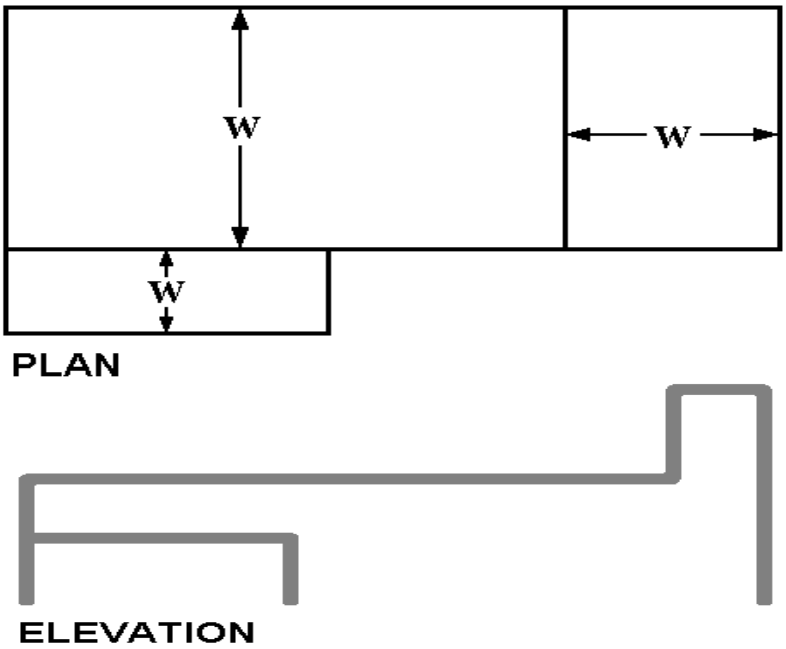

Example E

Roofs With Penthouses, Open Courtyards, Additional Floors, etc.

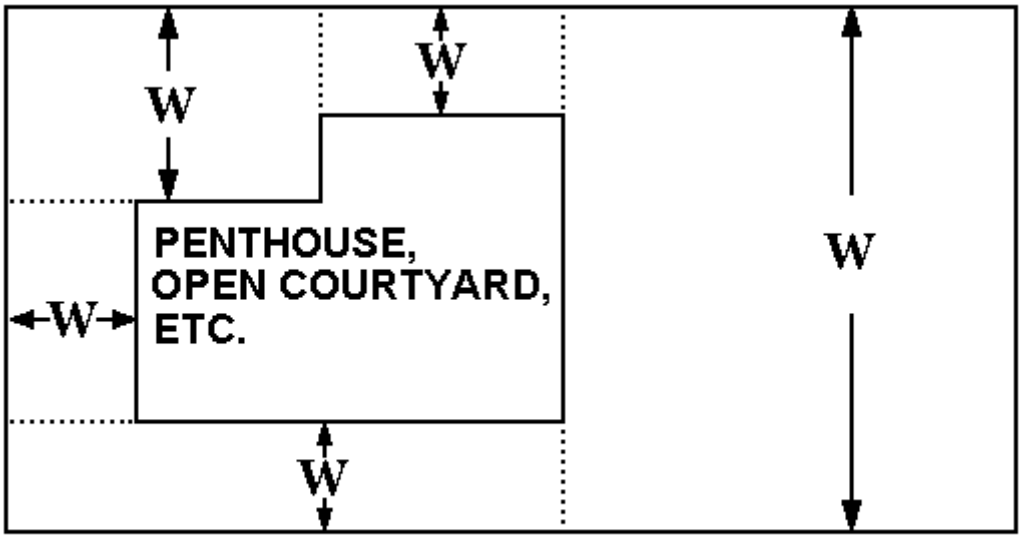

CORRECT

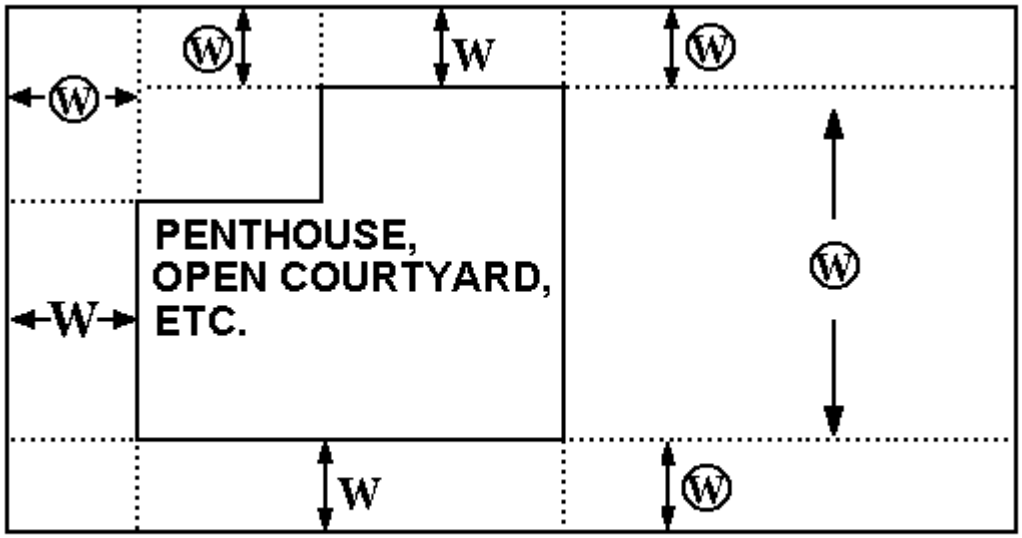

INCORRECT

Such roofs are to be divided into subareas by using dividing lines of minimum length to minimize the size and number of the areas which are potentially less than or equal to 50 feet (15.25 meters) in width, in order to limit the size of roof areas where the safety monitoring system alone can be used (WAC 296-155-24505 (2)(j)). Dotted lines are used in the examples to show the location of dividing lines.

Ⓦ denotes incorrect measurements of width.

Example F
Irregular, Non-Rectangular Shaped Roofs

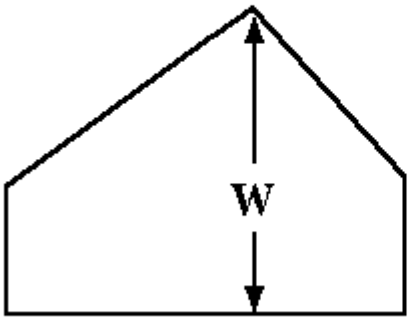

PLAN

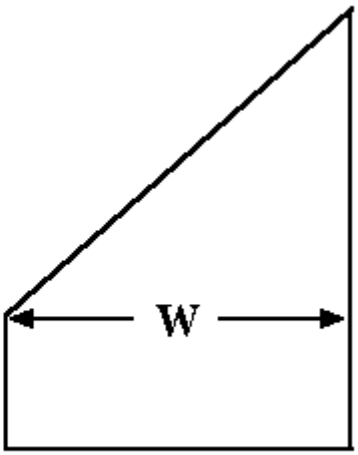

PLAN

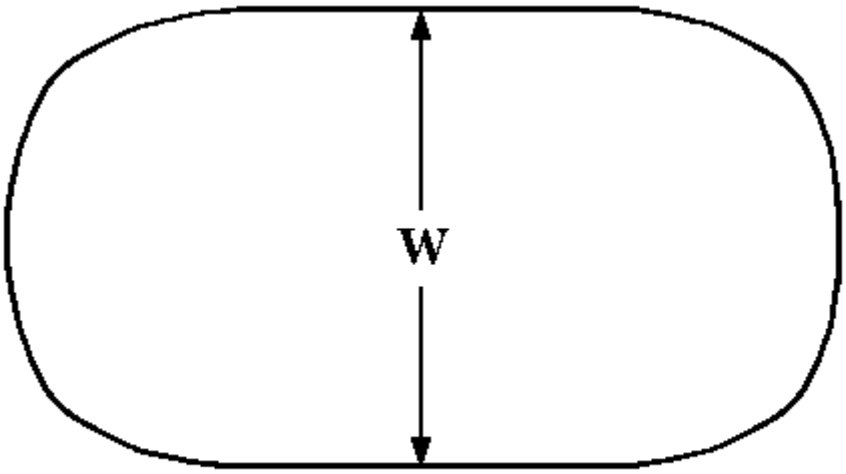

PLAN

[Statutory Authority: RCW 49.17.010, .040, .050, and .060. 16-09-085 (Order 15-08), § 296-155-24623, filed 04/19/16, effective 05/20/16. Statutory Authority: RCW 49.17.010, .040, .050, and .060. 13-04-073 (Order 06-08), § 296-155-24623, filed 02/04/13, effective 04/01/13.] Statutory Authority: Chapter 49.17 RCW. 96-24-051, (Order 96-05), § 296-155-24623, filed 11/27/96, effective 02/01/97. 95-10-016, § 296-155-24523, filed 4/25/95, effective 10/1/95.]

WAC 296-155-24624 Appendix B-Calculating fall clearance distance using a shock-absorbing lanyard and D-ring anchorage connector-Nonmandatory guidelines for complying with WAC 296-155-24613 (1)(d).

Do the following to calculate the fall clearance distance using a shock-absorbing lanyard and D-ring anchorage connector:

- First, add the length of the shock-absorbing lanyard (6 feet) to the maximum elongation of the shock absorber during deceleration (3 1/2 feet) to the average height of a worker (6 feet).
- Then, add a safety factor of 3 feet to allow for the possibility of an improperly fit full body harness, a taller than average worker and/or a miscalculation of distance.
- The suggested safe fall clearance distance for this example is 18 1/2 feet.

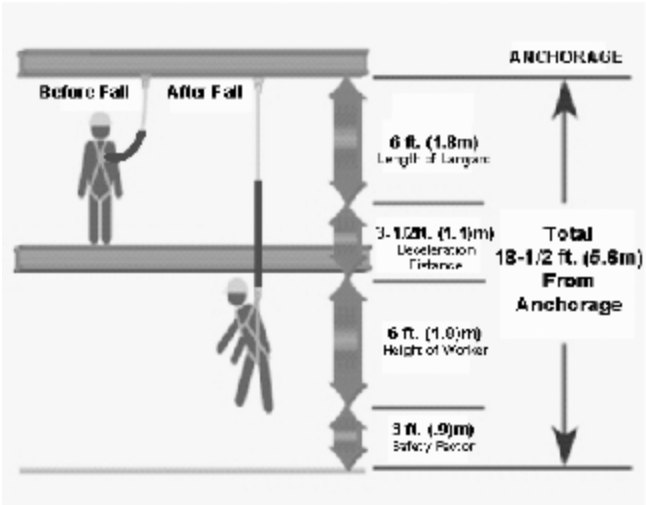

[Statutory Authority: RCW 49.17.010, .040, .050, and .060. 16-09-085 (Order 15-08), § 296-155-24624, filed 04/19/16, effective 05/20/16. Statutory Authority: RCW 49.17.010, .040, .050, and .060. 13-04-073 (Order 06-08), § 296-155-24624, filed 02/04/13, effective 04/01/13.]

PART D
FIRE PROTECTION AND PREVENTION

LAST UPDATED: 05/20/2016

WAC 296-155-250 Definitions applicable to this part. 1

WAC 296-155-260 Fire protection. 2

WAC 296-155-265 Fire prevention. 5

WAC 296-155-270 Flammable liquids. 7

WAC 296-155-275 Liquefied petroleum gas (LP-gas). 13

WAC 296-155-280 Temporary heating devices. 16

WAC 296-155-250 Definitions applicable to this part.

Approved. For the purpose of this part, means equipment that has been listed or approved by a nationally recognized testing laboratory such as Factory Mutual Engineering Corp., or Underwriters' Laboratories, Inc., federal agencies such as United States Mine Safety and Health Administration or United States Coast Guard, which issue approvals for such equipment, or the department of labor and industries.

Closed container. A container so sealed by means of a lid or other device that neither liquid nor vapor will escape from it at ordinary temperatures.

Combustion. **A**ny chemical process that involves oxidation sufficient to produce light or heat.

Fire brigade. An organized group of employees that are knowledgeable, trained, and skilled in the safe evacuation of employees during emergency situations and in assisting in fire fighting operations.

Fire resistance. So resistant to fire that, for specified time and under conditions of a standard heat intensity, it will not fail structurally and will not permit the side away from the fire to become hotter than a specified temperature. For purposes of this part, fire resistance must be determined by the Standard Methods of Fire Tests of Building Construction and Materials, NFPA 251-72.

Flammable. Capable of being easily ignited, burning intensely or having a rapid rate of flame spread.

Flammable liquid. Any liquid having a flashpoint at or below 199.°F (93°C). Flammable liquids are divided into 4 categories as follows:

(a) Category 1 includes liquids having flashpoints below 73.4°F (23°C) and having a boiling point at or below 95°F (35C).

(b) Category 2 includes liquids having flashpoints below 73.4°F (23°C) and having a boiling point above 95°F (35°C).

(c) Category 3 includes liquids having flashpoints at or above 73.4°F (23°C) and at or below 140°F (60°C). When a Category 3 liquid with a flashpoint at or above 100°F (37.8°C) is heated for use to within 30°F (16.7°C) of its flashpoint, it must be handled in accordance with the requirements for a Category 3 liquid with a flashpoint below 100°F (37.8°C).

(d) Category 4 includes liquids having flashpoints above 140°F (60°(C) and at or below 199.4°F (93°C). When a Category 4 flammable liquid is heated for use to within 30°F (16.7°C) of its flashpoint, it must be handled in accordance with the requirements for a Category 3 liquid with a flashpoint at or above 100°F (37.8°C).

(e) When liquid with a flashpoint greater than 199.4°F (93°C) is heated for use to within 30°F (16.7°C) of its flashpoint, it must be handled in accordance with the requirements for a Category 4 flammable liquid.

Flashpoint. The minimum temperature at which a liquid gives off vapor within a test vessel in sufficient concentration to form an ignitable mixture with air near the surface of the liquid, and must be determined as follows:

(a) The flashpoint of liquids having a viscosity less than 45 Saybolt Universal Second(s) at 100°F (37.8°C) and a flashpoint below 175°F (79.4°C) must be determined in accordance with the Standard Method of Test for Flash Point by the Tag Closed Tester, ASTMD-56-69, or an equivalent method as defined by WAC 296-901-14024, Appendix B-Physical hazard criteria.

(b) The flashpoint of liquids having a viscosity of 45 Saybolt Universal (Second(s) or more at 175°F (79.4°C) or higher must be determined in accordance with the Standard Method of Test for Flash Point by the Pensky-Martens Closed Tester, ASTM D-93-69, or an equivalent method as defined by WAC 296-901-14024, Appendix B-Physical hazard criteria.

Liquefied petroleum gases, LPG" and "LP Gas. Any material which is composed predominantly of any of the following hydrocarbons, or mixtures of them, such as propane, propylene, butane (normal butane or isobutane), and butylenes.

Portable tank. A closed container having a liquid capacity more than 60 U.S. gallons, and not intended for fixed installation.

Safety can. An approved closed container, of not more than 5 gallons capacity, having a spring-closing lid and spout cover and so designed that it will safely relieve internal pressure when subjected to fire exposure.

Salamander. A portable heating device, solid or liquid fueled, which is not vented to the outdoor atmosphere.

Vapor pressure. The pressure, measured in pounds per square inch (absolute), exerted by a volatile liquid as determined by the "Standard Method of Test for Vapor Pressure of Petroleum Products (Reid Method)," (ASTM D-323-68).

[Statutory Authority: RCW 49.17.010, .040, .050, and .060. 16-09-085 (Order 15-08), § 296-155-200, filed 04/19/16, effective 05/20/16. Statutory Authority: RCW 49.17.010, .040, .050, and .060. 14-07-086 (Order 13-08), § 296-155-250, filed 03/18/14, effective 05/01/14. Statutory Authority: RCW 49.17.040 and 49.17.050. 86-03-074 (Order 86-14), § 296-155-250, filed 1/21/86; Order 74-26, § 296-155-250, filed 5/7/74, effective 6/6/74.]

WAC 296-155-260 Fire protection.

(1) **General requirements.**

(a) You must be responsible for development of a fire protection program to be followed throughout all phases of construction and demolition work, and you must provide for firefighting equipment as specified in this part. As fire hazards occur, you must not delay in providing necessary equipment.

(b) Access to all available firefighting equipment must be maintained at all times.

(c) All firefighting equipment, provided by the employer, must be conspicuously located.

(d) All firefighting equipment must be periodically inspected by a competent person, and maintained in operating condition. You must immediately replace defective equipment.

(e) As warranted by the project, you must provide a trained and equipped firefighting organization (fire brigade) to assure adequate protection to life.

(2) **Water supply.**

(a) You must make available a temporary or permanent water supply, of sufficient volume, duration, and pressure, required to properly operate firefighting equipment as soon as combustible materials accumulate.

(b) Where underground water mains are to be provided, they must be installed, completed, and made available for use as soon as practicable.

(3) **Portable firefighting equipment.**

(a) You must provide a fire extinguisher, rated not less than 2A, for each 3,000 square feet of a combustible building area, or major fraction thereof. Travel distance from any point of the protected area to the nearest fire extinguisher must not exceed a horizontal distance of 100 feet.

> *Note: One 55-gallon open drum of water with two fire pails may be substituted for a fire extinguisher having a 2A rating.*

(b) A 1/2-inch diameter garden-type hose line, not to exceed 100 feet in length and equipped with a nozzle, may be substituted for a 2A-rated fire extinguisher, provided it is capable of discharging a minimum of 5 gallons per minute with a minimum hose stream range of 30 feet horizontally. The garden-type hose lines must be mounted on conventional racks or reels. The number and location of hose racks or reels must be such that at least one hose stream can be applied to all points in the area.

(c) You must provide one or more fire extinguishers, rated not less than 2A, on each floor. In multistory buildings, where combustibles are present, at least one fire extinguisher must be located adjacent to a stairway.

(d) You must protect extinguishers and water drums, that are subject to freezing from freezing.

(e) You must provide a fire extinguisher, rated not less than 10B, within 50 feet of wherever more than 5 gallons of flammable liquids or 5 pounds of flammable gas are being used on the job site. This requirement does not apply to the integral fuel tanks of motor vehicles.

(f) Carbon tetrachloride and other toxic vaporizing liquid fire extinguishers are prohibited.

(g) You must inspect portable fire extinguishers periodically and maintain them in accordance with Maintenance and Use of Portable Fire Extinguishers, NFPA No. 10A-1981 and WAC 296-800-300.

(h) Fire extinguishers which have been listed or approved by a nationally recognized testing laboratory, must be used to meet the requirements of this part. (See Table D-1)

> *Note: For additional requirements relating to portable fire extinguishers see WAC 296-800-300.*

	WATER TYPE				FOAM	CARBON DIOXIDE	DRY CHEMICAL			
							SODIUM OR POTASSIUM BICARBONATE		MULTI-PURPOSE ABC	
	STORED PRESSURE	CARTRIDGE-OPERATED	WATER PUMP TANK	SODA ACID	FOAM	CO_2	CARTRIDGE OPERATED	STORED PRESSURE	STORED PRESSURE	CARTRIDGE OPERATED
CLASS A FIRES WOOD, PAPER, TRASH, HAVING GLOWING EMBERS ORDINARY COMBUSTIBLES	YES	YES	YES	YES	YES	NO (BUT WILL CONTROL SMALL SURFACE FIRES)	NO (BUT WILL CONTROL SMALL SURFACE FIRES)	NO (BUT WILL CONTROL SMALL SURFACE FIRES)	YES	YES
CLASS B FIRES FLAMMABLE LIQUIDS, GASOLINE, OIL, PAINTS, GREASE, ETC. FLAMMABLE LIQUIDS	NO	NO	NO	NO	YES	YES	YES	YES	YES	YES
CLASS C FIRES ELECTRICAL EQUIPMENT ELECTRICAL EQUIPMENT	NO	NO	NO	NO	NO	YES	YES	YES	YES	YES
CLASS D FIRES COMBUSTIBLE METALS COMBUSTIBLE METALS	SPECIAL EXTINGUISHING AGENTS APPROVED BY RECOGNIZED TESTING LABORATORIES									
METHODS OF OPERATION	PULL PIN - SQUEEZE LEVER	TURN UPSIDE DOWN AND PUMP	PUMP HANDLE	TURN UPSIDE DOWN	TURN UPSIDE DOWN	PULL PIN SQUEEZE LEVER	RUPTURE CARTRIDGE SQUEEZE LEVER	PULL PIN SQUEEZE HANDLE	PULL PIN - SQUEEZE HANDLE	RUPTURE CARTRIDGE SQUEEZE LEVER
RANGE	30' - 40'	30' - 40'	30' - 40'	30' - 40'	30' - 40'	3' - 8'	5' - 20'	5' - 20'	5' - 20'	5' - 20'
MAINTENANCE	CHECK AND PRESSURE GAUGE MONTHLY	WEIGH GAS CARTRIDGE AND WATER IF DEIONIZED ANNUALLY	DISCHARGE AND FILL WITH WATER ANNUALLY	DISCHARGE ANNUALLY RECHARGE	DISCHARGE ANNUALLY RECHARGE	WEIGH SEMI-ANNUALLY	WEIGH GAS CARTRIDGE CHECK CONDITION OF DRY CHEMICAL ANNUALLY	CHECK PRESSURE GAUGE AND CONDITION OF DRY CHEMICAL ANNUALLY	CHECK PRESSURE GAUGE AND CONDITION OF DRY CHEMICAL ANNUALLY	WEIGH GAS CARTRIDGE CHECK CONDITION OF DRY CHEMICAL ANNUALLY

> *Note: 100 feet, or less, of 1-1/2 inch hose, with a nozzle capable of discharging water at 25 gallons or more per minute, may be substituted for a fire extinguisher rated not more than 2A in the designated area provided that the hose line can reach all points in the area.*

(i) If fire hose connections are not compatible with local firefighting equipment, the contractor must provide adapters, or equivalent, to permit connections.

(j) During demolition involving combustible materials, you must make available charged hose lines, supplied by hydrants, water tank trucks with pumps, or equivalent.

(4) **Fixed firefighting equipment.**

(a) Sprinkler protection.

(i) If the facility being constructed includes the installation of automatic sprinkler protection, the installation must closely follow the construction and be placed in service as soon as applicable laws permit following completion of each story.

(ii) During demolition or alterations, existing automatic sprinkler installations must be retained in service as long as reasonable. The operation of sprinkler control valves must be permitted only by properly authorized persons.

Note: Modification of sprinkler systems to permit alterations or additional demolition should be expedited so that the automatic protection may be returned to service as quickly as possible. Sprinkler control valves must be checked daily at close of work to ascertain that the protection is in service.

(b) Standpipes. In all structures in which standpipes are required, or where standpipes exist in structures being altered, they must be brought up as soon as applicable laws permit, and must be maintained as construction progresses in such a manner that they are always ready for fire protection use. The standpipes must be provided with Siamese fire department connections on the outside of the structure, at the street level, which must be conspicuously marked. There must be at least one standard hose outlet at each floor.

(5) **Fire alarm devices.**

(a) You must establish an alarm system, e.g., telephone system, siren, etc., whereby employees on the site and the local fire department can be alerted for an emergency.

(b) You must conspicuously post the alarm code and reporting instructions at phones and at employee entrances.

(6) **Fire cutoffs.**

(a) You must give fire walls and exit stairways, required for the completed buildings, construction priority. Fire doors, with automatic closing devices, must be hung on openings as soon as practical.

(b) Fire cutoffs must be retained in buildings undergoing alterations or demolition until operations necessitate their removal.

[Statutory Authority: RCW 49.17.010, .040, .050, and .060. 16-09-085 (Order 15-08), § 296-155-260, filed 04/19/16, effective 05/20/16. Statutory Authority: RCW 49.17.010, .040, .050, and .060. 14-07-086 (Order 13-08), § 296-155-260, filed 03/18/14, effective 05/01/14. Statutory Authority: RCW 49.17.010, .040, .050. 01-11-038 (Order 99-36), § 296-155-260, filed 05/09/01, effective 09/01/01. Statutory Authority: Chapter 49.17 RCW. 94-15-096 (Order 94-07), § 296-155-260, filed 7/20/94, effective 9/20/94. Statutory Authority: RCW 49.17.040 and 49.17.050. 86-03-074 (Order 86-14), § 296-155-260, filed 1/21/86; Order 76-6, § 296-155-260, filed 3/1/76; Order 74-26, § 296-155-260, filed 5/7/74, effective 6/6/74.]

WAC 296-155-265 Fire prevention.

(1) **Ignition hazards.**

(a) Electrical wiring and equipment for light, heat, or power purposes must be installed in compliance with the requirements of Part I of this standard.

(b) You must locate internal combustion engine powered equipment so that exhausts are well away from combustible materials. When exhausts are piped to outside the building under construction, a clearance of at least 6 inches must be maintained between such piping and combustible material.

(c) Smoking must be prohibited at or in the vicinity of operations which constitute a fire hazard, and must be conspicuously posted: "No smoking or open flame."

(d) Portable battery powered lighting equipment, used in connection with the storage, handling, or use of flammable gases or liquids, must be of the type approved for the hazardous locations.

(e) The nozzle of air, inert gas, and steam lines or hoses, when used in the cleaning or ventilation of tanks and vessels that contain hazardous concentrations of flammable gases or vapors, must be bonded to the tank or vessel shell. Bonding devices must not be attached or detached in hazardous concentrations of flammable gases or vapors.

(f) Workers must not take open lights or open flames near or in an open sewer manhole, gas main, conduit or other similar place until the absence of explosive or harmful gases has been assured. Open lights or flames must not be carried into areas and enclosures where flammable vapors or exposed low flash point solvents exist. Only approved and suitable protected lights must be used.

(2) **Temporary buildings.**

(a) You must not erect any temporary building where it will adversely affect any means of exit.

(b) Temporary buildings, when located within another building or structure, must be of either noncombustible construction or of combustible construction having a fire resistance of not less than 1 hour.

(c) Temporary buildings, located other than inside another building and not used for the storage, handling, or use of flammable liquids, flammable gases, explosives, or blasting agents, or similar hazardous occupancies, must be located at a distance of not less than 10 feet from another building or structure. Groups of temporary buildings, not exceeding 2,000 square feet in aggregate, must, for the purpose of this part, be considered a single temporary building.

(3) **Open yard storage.**

(a) You must pile combustible materials with due regard to the stability of piles and in no case higher than 20 feet.

(b) Driveways between and around combustible storage piles must be at least 15 feet wide and maintained free from accumulation of rubbish, equipment, or other articles or materials. Driveways must be so spaced that a maximum grid system unit of 50 feet by 150 feet is produced.

(c) You must keep the entire storage site free from accumulation of unnecessary combustible materials. You must keep weeds and grass down and a regular procedure provided for the periodic cleanup of the entire area.

(d) When there is a danger of an underground fire, you must not use that land for combustible or flammable storage.

(e) Method of piling must be solid wherever possible and in orderly and regular piles. You must not store any combustible material outdoors within 10 feet of a building or structure.

(f) You must provide portable fire extinguishing equipment, suitable for the fire hazard involved, at convenient, conspicuously accessible locations in the yard area. You must place portable fire extinguishers, rated not less than 2A, so that maximum travel distance to the nearest unit must not exceed 100 feet.

(4) **Indoor storage.**

(a) Storage must not obstruct, or adversely affect, means of exit.

(b) You must store all materials, handled, and piled with due regard to their fire characteristics.

(c) You must segregate noncompatible materials, which may create a fire hazard, by a barrier having a fire resistance of at least 1 hour.

(d) You must pile material to minimize the spread of fire internally and to permit convenient access for firefighting. You must maintain stable piling at all times. You must maintain aisle space to safely accommodate the widest vehicle that may be used within the building for firefighting purposes.

(e) You must maintain clearance of at least 36 inches between the top level of the stored material and the sprinkler deflectors.

(f) You must maintain clearance around lights and heating units to prevent ignition of combustible materials.

(g) You must maintain a clearance of 24 inches around the path of travel of fire doors unless a barricade is provided, in which case no clearance is needed. Material must not be stored within 36 inches of a fire door opening.

[Statutory Authority: RCW 49.17.010, .040, .050, and .060. 16-09-085 (Order 15-08), § 296-155-265, filed 04/19/16, effective 05/20/16. Statutory Authority: RCW 49.17.010, .040, .050, and .060. 14-07-086 (Order 13-08), § 296-155-265, filed 03/18/14, effective 05/01/14.: Statutory Authority: Chapter 49.17 RCW. 88-23-054 (Order 88-25), § 296-155-265, filed 11/14/88; Order 74-26, § 296-155-265, filed 5/7/74, effective 6/6/74.]

WAC 296-155-270 Flammable liquids.

(1) **General requirements.**

(a) You must use only approved containers and portable tanks for storage and handling of flammable liquids. You must use approved metal safety cans, or department of transportation approved containers for the handling and use of flammable liquids in quantities 5 gallons or less, except that this does not apply to those flammable liquid materials which are highly viscid (extremely hard to pour), which may be used and handled in original shipping containers. For quantities of one gallon or less, only the original container may be used for storage, use, and handling of flammable liquids.

(b) You must not store flammable liquids in areas used for exits, stairways, or normally used for the safe passage of people.

(c) You must legibly mark flammable liquid containers to indicate their contents. Each storage container for flammable liquids, with a capacity of 50 gallons or more, must have the contents of the container identified by a sign of clearly visible contrasting colors with letters at least 3 inches high, painted on the container at the discharge valve and at the fill point.

(d) You must not use gasoline as a solvent or a cleaning agent.

(2) **Indoor storage of flammable liquids.**

(a) You must not store more than 25 gallons of flammable liquids in a room outside of an approved storage cabinet. For storage of liquid petroleum gas, see WAC 296-155-275.

(b) You must store quantities of flammable liquid in excess of 25 gallons in an acceptable or approved cabinet meeting the following requirements:

(i) Acceptable wooden storage cabinets must be constructed in the following manner, or equivalent: The bottom, sides, and top must be constructed of an exterior grade of plywood at least 1 inch in thickness, which must not break down or delaminate under standard fire test conditions. All joints must be rabbeted and must be fastened in two directions with flathead wood screws, when more than one door is used, there must be a rabbeted overlap of not less than 1 inch. Steel hinges must be mounted in such a manner as to not lose their holding capacity due to loosening or burning out of the screws when subjected to fire. Such cabinets must be painted inside and out with fire retardant paint.

(ii) Approved metal storage cabinets will be acceptable.

(iii) Cabinets must be labeled in conspicuous lettering, “Flammable-Keep Away from Open Flames.”

(c) You must not store more than 60 gallons of Category 1, 2, or 3 flammable liquids or 120 gallons of Category 4 flammable liquids in any one storage cabinet. Not more than 3 such cabinets may be located in a single storage area. You must store quantities in excess of this in an inside storage room.

(d) (i) Inside storage rooms must be constructed to meet the required fire-resistive rating for their use. Such construction must comply with the test specifications set forth in Standard Methods of Fire Test of Building Construction and Material, NFPA 251-1972.

(ii) Where an automatic extinguishing system is provided, the system must be designed and installed in an approved manner. Openings to other rooms or buildings must be provided with noncombustible liquid-tight raised sills or ramps at least 4 inches in height, or the floor in the storage area must be at least 4 inches below the surrounding floor. Openings must be provided with approved self-closing fire doors. The room must be liquid-tight where the walls join the floor. A permissible alternate to the sill or ramp is an open-grated trench, inside of the room, which drains to a safe location. Where other portions of the building or other buildings are exposed, windows must be protected as set forth in the Standard for Fire Doors and Windows, NFPA No. 80-1983, for Class E or F openings. Wood of at least one-inch nominal thickness may be used for shelving, racks, dunnage, scuffboards, floor overlay and similar installations.

(iii) You must not store materials which will react with water and create a fire hazard in the same room with flammable liquids.

(iv) Storage in inside storage rooms must comply with Table D-2 following:

Table D-2

Fire Prevention Provided	Fire Assistance	Maximum Size	Total Allowable Quantities gals./sq. ft./floor Area
Yes	2 hrs.	500 sq. ft.	10
No	2 hrs.	500 sq. ft.	4
Yes	1 hr.	150 sq. ft.	5
No	1 hr.	150 sq. ft.	2

Note: Fire protection system must be sprinkler, water spray, carbon dioxide or other system approved by a nationally recognized testing laboratory for this purpose.

(v) Electrical wiring and equipment located in inside storage rooms must be approved for Class 1, Division 1, hazardous locations. For definition of Class 1, Division 1, hazardous locations, see WAC 296-155-456.

(vi) You must provide every inside storage room with either a gravity or a mechanical exhausting system. Such system must commence not more than 12 inches above the floor and be designed to provide for a complete change of air within the room at least 6 times per hour. If a mechanical exhausting system is used, it must be controlled by a switch located outside of the door. The ventilating equipment and any lighting fixtures must be operated by the same switch. An electric pilot light must be installed adjacent to the switch if Category 1, 2, or 3 flammable liquids are dispensed within the room. Where gravity ventilation is provided, the fresh air intake, as well as the exhausting outlet from the room, must be on the exterior of the building in which the room is located.

(vii) In every inside storage room you must maintain one clear aisle at least 3 feet wide. You must not stack containers over 30 gallons capacity one upon the other.

(viii) You must store flammable liquids in excess of that permitted in inside storage rooms outside of buildings in accordance with subsection (3) of this section.

(3) **Storage outside buildings.**

(a) Storage of containers (not more than 60 gallons each) must not exceed 1,100 gallons in any one pile or area. You must separate piles or groups of containers by a 5-foot clearance. Piles or groups of containers must not be nearer than 20 feet to a building.

(b) Within 200 feet of each pile of containers, there must be a 12-foot-wide access way to permit approach of fire control apparatus.

(c) The storage area must be graded in a manner to divert possible spills away from buildings or other exposures, or must be surrounded by a curb or earth dike at least 12 inches high. When curbs or dikes are used, you must make provisions for draining off accumulations of ground or rain water, or spills of flammable liquids. Drains must terminate at a safe location and must be accessible to operation under fire conditions.

(d) Outdoor portable tank storage.

(i) Portable tanks must not be nearer than 20 feet from any building. Two or more portable tanks, grouped together, having a combined capacity in excess of 2,200 gallons, must be separated by a 5-foot-clear area. Individual portable tanks exceeding 1,100 gallons must be separated by a 5-foot-clear area.

(ii) Within 200 feet of each portable tank, there must be a 12-foot-wide access way to permit approach of fire control apparatus.

(e) You must keep storage areas free of weeds, debris, and other combustible material not necessary to the storage.

(f) You must provide portable tanks, not exceeding 660 gallons, with emergency venting and other devices, as required by chapters III and IV of NFPA 30-1972, The Flammable and Combustible Liquids Code.

(g) Portable tanks, in excess of 660 gallons, must have emergency venting and other devices, as required by chapters II and III of the Flammable and Combustible Liquids Code, NFPA 30-1972.

(4) **Fire control for flammable liquid storage.**

(a) You must locate at least one portable fire extinguisher, having a rating of not less than 20-B units, outside of, but not more than 10 feet from, the door opening into any room used for storage of more than 60 gallons of flammable liquids.

(b) You must locate at least one portable fire extinguisher having a rating of not less than 20-B units not less than 25 feet, nor more than 75 feet, from any flammable liquid storage area located outside.

(c) When sprinklers are provided, they must be installed in accordance with the Standard for the Installation of Sprinkler Systems, NFPA 13-1972.

(d) You must provide at least one portable fire extinguisher having a rating of not less than 20-B:C units on all tank trucks or other vehicles used for transporting and/or dispensing flammable liquids.

Note: For additional requirements relating to portable fire extinguishers see WAC 296-800-300.

(5) **Dispensing liquids.**

(a) You must separate areas in which flammable liquids are transferred at the same time, in quantities greater than 5 gallons from one tank or container to another tank or container, from other operations by 25-feet distance or by construction having a fire-resistance of at least one hour. You must provide drainage or other means to control spills. You must provide adequate natural or mechanical ventilation to maintain the concentration of flammable vapor at or below 10% of the lower flammable limit.

(b) You must transfer Category 1 2, or 3 flammable liquids from one container to another only when containers are electrically interconnected (bonded).

(c) You must draw from or transfer flammable liquids into vessels, containers, or tanks within a building or outside only through a closed piping system, from safety cans, by means of a device drawing through the top, or from a container, or portable tanks, by gravity or pump, through an approved self-closing valve. You must not transfer by means of air pressure on the container or portable tank.

(d) You must protect the dispensing units against collision damage.

(e) Dispensing devices and nozzles for Category 1, 2, or 3 flammable liquids must be of an approved type, as required by WAC 296-24-33015.

(6) **Handling liquids at point of final use.**

(a) You must keep Category 1, 2, or 3 flammable liquids in closed containers when not actually in use.

(b) You must dispose of leakage or spillage of flammable liquids promptly and safely.

(c) You must only use Category 1, 2, or 3 flammable liquids where there are no open flames or other sources of ignition within 50 feet of the operation, unless conditions warrant greater clearance.

(7) **Service and refueling areas.**

(a) You must store flammable liquids in approved closed containers, in tanks located underground, or in aboveground portable tanks.

(b) The tank trucks must comply with the requirements covered in the Standard for Tank Vehicles for Flammable and Combustible Liquids, NFPA No. 385-1977.

(c) The dispensing hose must be an approved type.

(d) The dispensing nozzle must be an approved automatic-closing type.

(e) You must not abandon underground tanks.

(f) You must provide clearly identified and easily accessible switch(es) at a location remote from dispensing devices to shut off the power to all dispensing devices in the event of an emergency.

(g) (i) Heating equipment of an approved type may be installed in the lubrication or service area where there is no dispensing or transferring of Category 1, 2, or 3 flammable liquids, provided the bottom of the heating unit is at least 18 inches above the floor and is protected from physical damage.

(ii) Heating equipment installed in lubrication or service areas, where Category 1, 2, or 3 flammable liquids are dispensed, must be of an approved type for garages, and must be installed at least 8 feet above the floor.

(h) You must ensure that there is no smoking or open flames in the areas used for fueling, servicing fuel systems for internal combustion engines, receiving or dispensing of flammable liquids.

(i) You must post conspicuous and legible signs prohibiting smoking.

(j) You must shut off the motor of any equipment being fueled during the fueling operation.

(k) You must provide each service or fueling area with at least one fire extinguisher having a rating of not less than 20BC located so that an extinguisher will be within 75 feet of each pump, dispenser, underground fill pipe opening, and lubrication or service area.

Note: For additional requirements relating to portable fire extinguishers see WAC 296-800-300.

[Statutory Authority: RCW 49.17.010, .040, .050, and .060. 16-09-085 (Order 15-08), § 296-155-2760, filed 04/19/16, effective 05/20/16. Statutory Authority: RCW 49.17.010, .040, .050, and .060. 14-07-086 (Order 13-08), § 296-155-270, filed 03/18/14, effective 05/01/14. Statutory Authority: RCW 49.17.010, .040, .050. 99-17-094 (Order 99-01), § 296-155-270, filed 08/17/99, effective 12/01/99. Statutory Authority: Chapter 49.17 RCW. 88-23-054 (Order 88-25), § 296-155-270, filed 11/14/88. Statutory Authority: RCW 49.17.040 and 49.17.050. 86-03-074 (Order 86-14), § 296-155-270, filed 1/21/86; Order 74-26, § 296-155-270, filed 5/7/74, effective 6/6/74.]

WAC 296-155-275 Liquefied petroleum gas (LP-gas).

(1) **Approval of equipment and systems.**

(a) Each system must have containers, valves, connectors, manifold valve assemblies, and regulators of an approved type.

(b) All cylinders must meet the department of transportation specification identification requirements published in 49 CFR Part 178, Shipping Container Specifications.

(2) **Welding on LP-gas containers**. Welding is prohibited on containers.

(3) **Container valves and container accessories.**

(a) Valves, fittings, and accessories connected directly to the container, including primary shut off valves, must have a rated working pressure of at least 250 p.s.i.g. and must be of material and design suitable for LP-gas service.

(b) Connections to containers, except safety relief connections, liquid level gauging devices, and plugged openings, must have shutoff valves located as close to the container as practicable.

(4) **Safety devices.**

(a) Every container and every vaporizer must be provided with one or more approved safety relief valves or devices. You must arrange these valves to afford free vent to the outer air with discharge not less than 5 feet horizontally away from any opening into a building which is below such discharge.

(b) Shutoff valves must not be installed between the safety relief device and the container, or the equipment or piping to which the safety relief device is connected, except that a shutoff valve may be used where the arrangement of this valve is such that full required capacity flow through the safety relief device is always afforded.

(c) You must not locate container safety relief devices and regulator relief vents less than 5 feet in any direction from air openings into sealed combustion system appliances or mechanical ventilation air intakes.

(5) **Dispensing.**

(a) You must perform filling of fuel containers for trucks or motor vehicles from bulk storage containers not less than 10 feet from the nearest masonry-walled building, or not less than 25 feet from the nearest building or other construction and, in any event, not less than 25 feet from any building opening.

(b) You must perform filling of portable containers or containers mounted on skids from storage containers not less than 50 feet from the nearest building.

(6) **Requirements for appliances.**

(a) LP-gas consuming appliances must be approved types.

(b) Any appliance that was originally manufactured for operation with a gaseous fuel other than LP-gas, and is in good condition, may be used with LP-gas only after it is properly converted, adapted, and tested for performance with LP-gas before the appliance is placed in use.

(7) **Containers and regulating equipment installed outside of buildings or structures**. Containers must be upright upon firm foundations or otherwise firmly secured. You must guard against the possible effect on the outlet piping of settling by a flexible connection or special fitting.

(8) **Containers and equipment used inside of buildings or structures.**

(a) When operational requirements make portable use of containers necessary, and their location outside of buildings or structures is impractical, containers and equipment are permitted to be used inside of buildings or structures in accordance with (b) through (k) of this subsection. In addition, there may be provisions of this section that are applicable to the particular use or occupancy.

(b) Containers in use means connected for use.

(c) Systems utilizing containers having a water capacity greater than 2 1/2-pounds (nominal one pound LP-gas capacity) must be equipped with excess flow valves. Such excess flow valves must be either integral with the container valves or in the connections to the container valve outlets.

(d) Regulators, when required, must be either directly connected to the container valves or to manifolds connected to the container valves. The regulator must be suitable for use with LP-gas. Manifolds and fittings connecting containers to pressure regulator inlets must be designed for at least 250 p.s.i.g. service pressure.

(e) You must protect valves on containers having water capacity greater than 50 pounds (nominal 20 pounds LP-gas capacity) from damage while in use or storage.

(f) You must not use aluminum piping or tubing.

(g) Hose must be designed for a working pressure of at least 250 p.s.i.g. Design, construction, and performance of hose, and hose connections must have their suitability determined by listing by a nationally recognized testing agency. The hose length must be as short as practical. Hoses must be long enough to permit compliance with spacing provisions of (a) through (m) of this subsection, without kinking or straining, or causing hose to be so close to a burner as to be damaged by heat.

(h) Portable heaters, including salamanders, must be equipped with an approved automatic device to shut off the flow of gas to the mainburner, and pilot if used, in the event of flame failure. Such heaters, having inputs above 50,000 BTU per hour, must be equipped with either a pilot, which must be lighted and proved before the main burner can be turned on, or an electrical ignition system.

Note: The provisions of this subdivision do not apply to portable heaters under 7,500 BTU per hour input when used with containers having a maximum water capacity of 2 1/2 pounds.

(i) You must not use container valves, connectors, regulators, manifolds, piping, and tubing as structural supports for heaters.

(j) You must locate containers, regulating equipment, manifolds, pipe, tubing, and hose to minimize exposure to high temperatures or physical damage.

(k) Containers having a water capacity greater than 2 1/2 pounds (nominal one pound LP-gas capacity) connected for use must stand on a firm and substantially level surface and, when necessary, must be secured in an upright position.

(l) The maximum water capacity of individual containers must be 245 pounds (nominal 100 pounds LP-gas capacity).

(m) For temporary heating, you must locate heaters (other than integral heater-container units) at least 6 feet from any LP-gas container. This does not prohibit the use of heaters specifically designed for attachment to the container or to a supporting standard, provided they are designed and installed so as to prevent direct or radiant heat application from the heater onto the containers. You must not direct blower and radiant type heaters toward any LP-gas container within 20 feet.

(n) If two or more heater-container units, of either the integral or nonintegral type, are located in an unpartitioned area on the same floor, you must separate the container or containers of each unit from the container or containers of any other unit by at least 20 feet.

(o) When heaters are connected to containers for use in an unpartitioned area on the same floor, the total water capacity of containers, manifolded together for connection to a heater or heaters, must not be greater than 735 pounds (nominal 300 pounds LP-gas capacity). You must separate such manifolds by at least 20 feet.

(p) Storage of containers awaiting use must be in accordance with subsections (10) and (11) of this section.

(9) **Multiple container systems.**

(a) You must arrange valves in the assembly of multiple container systems so that replacement of containers can be made without shutting off the flow of gas in the system. This provision is not to be construed as requiring an automatic changeover device.

(b) Heaters must be equipped with an approved regulator in the supply line between the fuel cylinder and the heater unit. Cylinder connectors must be provided with an excess flow valve to minimize the flow of gas in the event the fuel line becomes ruptured.

(c) Regulators and low-pressure relief devices must be rigidly attached to the cylinder valves, cylinders, supporting standards, the building walls, or otherwise rigidly secured, and must be so installed or protected from the elements.

(10) **Storage of LPG containers**. You must not store LPG within building.

(11) **Storage outside of buildings.**

(a) Storage outside of buildings, for containers awaiting use, must be located from the nearest building or group of buildings, in accordance with Table D-3:

Table D-3	
Quantity of LP-gas stored	**Distance (feet)**
500 lbs. Or less	0
501 to 6,000 lbs.	10
6,001, to 10,000 lbs.	20
Over 10,000 lbs.	25

(b) Containers must be in a suitable ventilated enclosure or otherwise protected against tampering, or possible damage by vehicular traffic.

(12) **Fire protection**. You must provide storage locations with at least one approved portable fire extinguisher having a rating of not less than 20-B:C.

> *Note: For additional requirements relating to portable fire extinguishers see WAC 296-800-300.*

[Statutory Authority: RCW 49.17.010, .040, .050, and .060. 16-09-085 (Order 15-08), § 296-155-275, filed 04/19/16, effective 05/20/16. Statutory Authority: RCW 49.17.040 and 49.17.050. 86-03-074 (Order 86-14), § 296-155-275, filed 1/21/86; Order 76-29, § 296-155-275, filed 9/30/76; Order 74-26, § 296-155-275, filed 5/7/74, effective 6/6/74.]

WAC 296-155-280 Temporary heating devices.

(1) **Ventilation.**

(a) You must supply fresh air in sufficient quantities to maintain the health and safety of workers. Where natural means of fresh air supply is inadequate, you must provide mechanical ventilation.

(b) When heaters are used in confined spaces, you must take special care to provide sufficient ventilation in order to ensure proper combustion, maintain the health and safety of workers, and limit temperature rise in the area.

(2) **Clearance and mounting.**

(a) You must install temporary heating devices to provide clearance to combustible material not less than the amount shown in Table D-4.

(b) Temporary heating devices, which are listed for installation with lesser clearances than specified in Table D-4, may be installed in accordance with their approval.

Table D-4			
Heating appliances		**Minimum clearance (inches)**	
	Sides	**Rear**	**Chimney Connector**
Rear heater, circulating type	12	12	18
Room heater, radiant type	36	36	18

(c) You must not set heaters that are not suitable for use on wood floors directly upon them or other combustible materials. When such heaters are used, you must rest them on suitable heat insulating material or at least one-inch concrete, or equivalent. The insulating material must extend beyond the heater two feet or more in all directions.

(d) You must locate heaters used in the vicinity of combustible tarpaulins, canvas, or similar coverings at least 10 feet from the coverings. You must securely fasten the coverings to prevent ignition or upsetting of the heater due to wind action on the covering or other material.

(3) **Stability**. You must set heaters, when in use, horizontally level, unless otherwise permitted by the manufacturer's markings.

(4) **Oil-fired heaters.**

(a) Flammable liquid-fired heaters must be equipped with a primary safety control to stop the flow of fuel in the event of flame failure. Barometric or gravity oil feed are not considered a primary safety control.

(b) You must use only heaters designed for barometric or gravity oil feed with the integral tanks.

(c) Heaters specifically designed and approved for use with separate supply tanks may be directly connected for gravity feed, or an automatic pump, from a supply tank.

(5) **Salamanders.**

(a) Coverage. You must not use solid fuel salamanders in buildings and on scaffolds.

(b) General requirements.

(i) All solid fuel salamanders must be designed and constructed for use with solid fuel, that is, coal or coke.

(ii) Solid fuel salamanders must be equipped with a cover designed as part of the unit, to prevent spillage of burning material in case of tipover.

(iii) You must assemble salamanders in accordance with the instructions issued by the manufacturer.

(iv) You must maintain the safeguards engineered into the product and ensue that any replacement is equivalent thereto.

(v) You must store salamanders in such a manner as to prevent deterioration or damage to the unit.

(c) Operation.

(i) You must follow manufacturers' instructions.

(ii) Each time a salamander is placed in operation you must check it to ensure that it is functioning properly. You must check its operation periodically thereafter.

(iii) When concentrations of carbon monoxide attain quantities greater than 35 parts per million (0.0035 percent) to air volume at employee breathing levels, you must extinguish the salamander unless additional natural or mechanical ventilation is provided to reduce the carbon monoxide content to permissible limits.

(iv) Tests for presence of carbon monoxide must be made by a qualified person within one hour after the start of each shift and at least every 3 hours thereafter. If concentrations of carbon monoxide reach 20 parts per million to air volume, tests must be made more frequently to determine if there is a continuing increase of carbon monoxide concentration.

(v) You must maintain records of all tests including the date, time, results obtained, and person making tests, for the duration of the project.

(vi) You must not permit anyone to be within the area being heated by the salamanders except under the following circumstances: When tending the salamanders; when testing the atmosphere; or in emergency situations.

(vii) You must not permit anyone to enter the heated area until notification is given to another person located outside. You must make periodic checks to ensure the health and safety of employees entering the heated area.

(viii) When a salamander is being used, you must assign the responsibility for its operation and maintenance to a qualified employee.

(ix) You must ensure that salamanders are not moved, handled, or serviced while hot or burning, or while component parts are hot to the touch.

(x) You must set salamanders, when in use, level with the horizontal unless otherwise permitted by the manufacturer's markings. Salamanders must be designed so as not to tip over when placed on a surface inclined 25° to the horizontal.

(xi) If equivalent protection and safety is afforded by alternative design, the 25° limitation may be reduced.

(xii) You must not set salamanders that are not suitable for use on wood floors directly upon them or other combustible materials. When such salamanders are used you must rest them on suitable insulating material or at least one-inch concrete or equivalent. The insulating material must extend beyond the salamander two feet or more in all directions.

(xiii) You must locate salamanders used in the vicinity of tarpaulins, canvas, or similar coverings a safe distance from coverings and other combustible materials. The coverings must be securely fastened to prevent ignition of the covering or upsetting of the salamanders due to wind action on the covering or other material.

(xiv) You must protect salamanders in use to prevent flame extinguishment.

(d) Ventilation.

(i) You must supply fresh air in sufficient quantities to maintain the health and safety of employees. Where natural means for fresh air supply is inadequate, you must provide mechanical ventilation. You must give particular attention to confined spaces and pockets where heat and fumes may accumulate and employees may be present (roof areas, peaks, basement).

(ii) When salamanders are used in confined spaces, you must take special care to provide sufficient ventilation in order to assure proper combustion, maintain the health and safety of employees, and limit temperature rise in the area.

(e) Fueling.

(i) Salamanders must be refueled only by a person trained in such operations.

(ii) Only a one day's supply of heater fuel must be stored inside a building in the vicinity of the salamander. General fuel storage must be outside the structure.

(iii) All fuel storage must be maintained a minimum of 25 feet from source of ignition.

(f) Maintenance.

(i) The user must comply with the maintenance instructions as provided by the manufacturer.

(ii) You must remove equipment showing evidence of deterioration or damage that constitutes a safety or health hazard from service.

(iii) Salamander repairs must be performed in accordance with the manufacturer's recommendations, and replacement parts must be equal to, the equivalent of, or the same as the original salamander equipment.

[Statutory Authority: RCW 49.17.010, .040, .050, and .060. 16-09-085 (Order 15-08), § 296-155-280, filed 04/19/16, effective 05/20/16. Statutory Authority: Chapter 49.17 RCW. 94-15-096 (Order 94-07), § 296-155-280, filed 7/20/94, effective 9/20/94; Order 76-29, § 296-155-280, filed 9/30/76; Order 74-26, § 296-155-280, filed 5/7/74, effective 6/6/74.]

PART E
SIGNALING AND FLAGGERS

LAST UPDATED: 05/20/2016

WAC 296-155-305 Signaling and Flaggers.....1

WAC 296-155-310 Barricades.....8

WAC 296-155-315 Definitions applicable to this part.....9

WAC 296-155-305 Signaling and Flaggers.

Definition:

Flagger. A person who provides temporary traffic control.

MUTCD. The Federal Highway Administration's Manual on Uniform Traffic Control as currently modified and adopted by the Washington State department of transportation.

> ***Link:*** *For the current version of the MUTCD, see the department of transportation's website at http://www.wsdot.wa.gov/ and type MUTCD into the search box*

(1) **General requirements for signaling and flaggers.**

(a) You must first apply the requirements in this section. Then you must set up and use temporary traffic controls according to the guidelines and recommendations in Part VI of the MUTCD.

(b) Job site workers with specific traffic control responsibilities must be trained in traffic control techniques, device usage, and placement.

> *Note:*
>
> - *You may purchase copies of the MUTCD by writing:*
>
> *US Government Printing Office*
> *Superintendent of Documents*
> *Mail Stop: SSOP*
> *Washington DC 20402-9328*
> - *To view and print a copy of the MUTCD go to* http://www.wsdot.wa.gov/ *and type MUTCD into the search box.*

(2) **When to use flaggers**.

(a) You must only use flaggers when other reasonable traffic control methods will not adequately control traffic in the work zone.

(b) If signs, signals, and barricades do not provide necessary protection from traffic at work zones and construction sites on or adjacent to a highway or street, then you must use flaggers or other appropriate traffic controls.

(3) **Flagger signaling.**

(a) Flagger signaling must be with sign paddles approved by WSDOT and conform to guidelines and recommendations of MUTCD.

(b) Sign paddles must comply with the requirements of the MUTCD.

(c) When flagging is done during periods of darkness, sign paddles must be retroreflective or illuminated in the same manner as signs.

(d) During emergency situations, red flags, meeting the specifications of the MUTCD, may be used to draw a driver's attention to particularly hazardous conditions. In nonemergency situations, a red flag may be held in the flagger's free hand to supplement the use of a sign paddle.

(4) **Adequate warning of approaching vehicles**. You must:

- Position work zone flaggers so they are not exposed to traffic or equipment approaching them from behind.
  - If this is not possible, then the employer, responsible contractor, and/or project owner must develop and use a method to ensure that flaggers have adequate visual warning of traffic and equipment approaching from behind.

Note:

- *The following are some optional examples of methods that may be used to adequately warn or protect flaggers:*
  - *Mount a mirror on the flagger's hard hat.*
  - *Use an observer.*
  - *Use "jersey" barriers.*
- *The department recognizes the importance of adequately trained flaggers and supports industry efforts to improve the quality of flagger training. However, training alone is not sufficient to comply with the statutory requirement of revising flagger safety standards to improve options available that ensure flagger safety and that flaggers have adequate visual warning of objects approaching from behind them.*

(5) **High-visibility garments for flaggers.**

(a) While flagging during daylight hours, a flagger must at least wear, as an outer garment:

- A high-visibility safety garment designed according to Class 2 specifications in ANSI/ISEA 107-1999, American National Standard for High-Visibility Safety Apparel.
  - Consisting of at least 775 square inches of background material that are fluorescent yellow-green, fluorescent orange-red or fluorescent red in color; and
  - 201 square inches of retroreflective material that encircles the torso and is placed to provide 360 degrees visibility around the flagger.
- A high visibility hard hat that is white, yellow, yellow-green, orange or red in color.

Note: A high-visibility garment meets Class 2 specifications if the garment:

- *Meets the requirements above; or*
- *Has an ANSI "Class 2" label.*

Definition:

Hours of darkness. 1/2 hour before sunset to 1/2 hour after sunrise.

(b) While flagging during hours of darkness, a flagger must at least wear, as an outer garment:

- A high-visibility safety garment designed according to Class 2 specifications in ANSI/ISEA 107-1999.
  - Consisting of at least 775 square inches of background material that are fluorescent yellow-green, fluorescent orange-red or fluorescent red in color; and
  - 201 square inches of retroreflective material that encircles the torso and is placed to provide 360 degrees visibility around the flagger.
- White coveralls, or other coveralls or trousers that have retroreflective banding on the legs designed according to ANSI/ISEA 107-1999 standards.
- When snow or fog limit visibility, pants, coveralls, or rain gear, meeting these additional requirements must be worn:
  - In a highly visible color;
  - With retroreflective banding on the legs;
  - Designed according to ANSI/ISEA 107-1999.
- A high-visibility hard hat:
  - Marked with at least 12 square inches of retroreflective material applied to provide 360 degrees of visibility.

Note: ANSI/ISEA 107-1999 is available by:

- *Purchasing copies of ANSI/ISEA 107-1999 by writing:*
  - *American National Standards Institute*
    11 West 42nd Street
    New York, NY 10036; or
  - *Contacting the ANSI website at http://web.ansi.org/.or*
- *Reading a copy of ANSI/ISEA 107-1999 at any Washington state library.*

(6) **Flagger training**. You must make sure that:

(a) Each flagger has in their possession:

- A valid Washington traffic control flagger card; or
- A valid flagger card from a state such as:
  - Oregon;
  - Idaho;
  - Montana; or
  - Other states having a flagger training reciprocity agreement with Washington.

(b) The flagger card shows the following:

- Verification that the flagger training required is completed;
- Date the flagger received their flagger training;
- Name of the instructor providing the flagger training;
- Name of the state that issued the flagger card;
- The card's expiration date, not to exceed three years from the date of issuance; and
- The flagger's picture or a statement that says "valid with photo ID."

(c) Flagger training is based upon the MUTCD.

EXEMPTION:
Personnel that have not completed a flagger-training course may be assigned duties as flaggers only during emergencies. Emergency assignments are temporary and last only until a certified flagger can be put into the position.

Definition:

Emergency. An unforeseen occurrence endangering life, limb, or property.

(7) **Flagger orientation and traffic control plan.**

(a) The employer, responsible contractor or project owner must conduct an orientation that familiarizes the flagger with the job site. This requirement applies each time the flagger is assigned to a new project or when job site conditions change significantly.

The orientation must include, but is not limited to:

- The flagger's role and location on the job site;
- Motor vehicle and equipment in operation at the site;
- Job site traffic patterns;
- Communications and signals to be used between flaggers and equipment operators;
- On-foot escape route; and
- Other hazards specific to the job site.

(b) If flaggers are used on a job that will last more than one day, then the employer, responsible contractor and/or project owner must keep on-site, a current site specific traffic control plan. The purpose of this plan is to help move traffic through or around the construction zone in a way that protects the safety of the traveling public, pedestrians and workers.

The plan must include, but is not limited to, the following items when they are appropriate:

- Sign use and placement;
- Application and removal of pavement markings;
- Construction;
- Scheduling;
- Methods and devices for delineation and channelization;
- Placement and maintenance of devices;
- Placement of flaggers;

- Roadway lighting;
- Traffic regulations; and
- Surveillance and inspection.

(8) **Advance warning signs.**

(a) You must provide the following on all flagging operations:

- A three sign advance warning sequence on all roadways with a speed limit below 45 mph.
- A four sign advance warning sequence on all roadways with a 45 mph or higher speed limit.

(b) Warning signs must reflect the actual condition of the work zone. When not in use, warning signs must either be taken down or covered.

(c) You must make sure to follow Table 1 for spacing of advance warning sign placement.

Table 1. Advanced Warning Sign Spacing

Road Type	Speed	Distances Between Advance Warning Signs.*			
		A.**	B.**	C.**	D.**
Freeways & Expressways	70 55	1,500 ft..+/- or per the MUTCD.	1,500 ft..+/- or per the MUTCD.	1,500 ft..+/- or per the MUTCD.	1,500 ft..+/- or per the MUTCD.
Rural Highways	65 60	800 ft..+/-	800 ft..+/-	800 ft..+/-	800 ft..+/-
Rural Roads	55 45	500 ft..+/-	500 ft..+/-	500 ft..+/-	500 ft..+/-
Rural Roads and Urban Arterials	40 35	350 ft..+/-	350 ft..+/-	350 ft..+/-	N/A
Rural Roads, Urban Streets, Residential Business Districts	30 25	200 ft.***	200 ft.***	200 ft.***	N/A
Urban Streets	25 or less	100 ft.***	100 ft.***	100 ft.***	N/A

* All spacing may be adjusted to accommodate interchange ramps, at-grade intersections, and driveways.
** This refers to the distance between advance warning signs. See Figure 1, Typical Lane Closure on Two-Lane Road. This situation is typical for roadways with speed limits less than 45 mph.

*** This spacing may be reduced in urban areas to fit roadway conditions.

EXEMPTION:
In a mobile flagging operation, as defined by the MUTCD when the flagger is moving with the operation, the "flagger ahead (symbol or text)" sign must be: • *Within 1,500 feet of the flagger; and* • *The flagger station must be seen from the sign.*

If terrain does not allow a motorist to see the flagger from the "flagger ahead" sign, the distance between the flagger and the sign must be shortened to allow visual contact, but in no case can the distance be less than the distance specified in Table 1, Advanced Warning Sign Spacing.

FIGURE 1

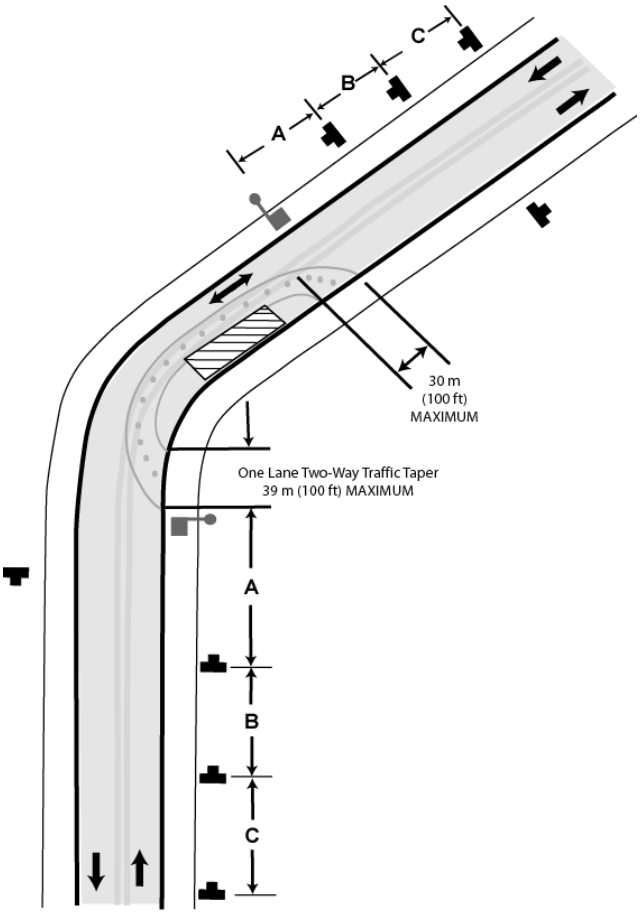

(9) **Providing a safe job site for flaggers**. Employers, responsible contractors and/or project owners must make sure that:

(a) Flagger stations are located far enough in advance of the work space so that the approaching road users will have sufficient distance to stop before entering the work space. Follow Table 2 for the distance of the flagger workstation in advance of the work space.

Table 2. Distance of Flagger Station in Advance of the Work Space

Speed* (mph)	Distance (ft)**
20	35
25	55
30	85
35	120
40	170
45	220
50	280
55	335
60	415
65	485

* Posted speed, off-peak 85th-percentile speed prior to work starting or the anticipated operating speed.
** This spacing may be reduced to fit roadway and worksite conditions. Distances greater than those listed in the table are acceptable.

(b) Flaggers stand either on the shoulder adjacent to the road user being controlled or in the closed lane prior to stopping road users. A flagger must only stand in the lane being used by moving road users after road users have stopped.

Definition:

Road user. A vehicle operator, bicyclist, or pedestrian within a public roadway, including workers in temporary traffic control zones.

(c) Flagger workstations are illuminated during hours of darkness by floodlights that do not create glare that poses a hazard for drivers.

Note: To identify potential glare, observe the lighted area from various directions and angles on the main roadway after initial floodlight setup.

EXEMPTION:

Emergency situations are exempt from these illumination requirements. For the purpose of this rule, ***emergency*** *means an unforeseen occurrence endangering life, limb, or property.*

(d) Flaggers are not assigned other duties while engaged in flagging activities.

(e) Flaggers do not use devices that may distract the flagger's vision, hearing, or attention.

- Examples of these devices include cell phones, pagers, radios, and headphones.
- Devices such as two-way radios used for communications between flaggers to direct traffic or ensure flagger safety are acceptable.

(f) Flaggers receive a rest period of at least 10 minutes, on the employer's time, for each 4 hours of working time.

- Rest periods must be scheduled as near as possible to the midpoint of the work period.
- A flagger must not be allowed to work more than three hours without a rest period.

EXEMPTION:
Scheduled rest periods are not required where the nature of the work allows a flagger to take intermittent rest periods equivalent to 10 minutes for each 4 hours worked.

[Statutory Authority: RCW 49.17.010, .040, .050, and .060. 16-09-085 (Order 15-08), § 296-155-305, filed 04/19/16, effective 05/20/16. Statutory Authority: RCW 49.17.010, .040, 050, .060. 13-24-099 (Order 13-15), § 296-155-305, filed 12/03/13, effective 01/06/14 Statutory Authority: RCW 49.17.010, .020, .040, .050, and .060. 07-03-163 (Order 06-30), § 296-155-305, filed 01/24/07, effective 04/01/07. Statutory Authority: RCW 49.17.010, .040, .050, and .060. 06-05-027 (Order 05-45), § 296-155-305, filed 02/07/06, effective 04/01/06. Statutory Authority: RCW 49.17.010, .040, .050, and .060. 04-24-089 (Order 04-02), § 296-155-305, filed 12/01/04, effective 01/01/05.] Statutory Authority: RCW 49.17.010, 49.17.040, 49.17.050, and 49.17.060. 03-06-076 (Order 02-35), § 296-155-305, filed 03/04/03, effective 08/01/03. Statutory Authority: RCW 49.17.010, .040, .050; Chapter 239, Laws of 2000 (ESHB 2647); and Chapter 34.05 RCW. 01-04-015 (Order 00-03), § 296-155-305, filed 01/26/01, effective 02/28/01. Statutory Authority: RCW 49.17.010, .040, .050. 00-12-018 (Order 00-03), § 296-155-305, filed 05/26/00, effective 05/26/00. Statutory Authority: Chapter 49.17 RCW. 93-19-142 (Order 93-04), § 296-155-305, filed 9/22/93, effective 11/1/93; 93-01-067 (Order 92-15), § 296-155-305, filed 12/11/92, effective 1/15/93; 89-11-035 (Order 89-03), § 296-155-305, filed 5/15/89, effective 6/30/89. Statutory Authority: RCW 49.17.040 and 49.17.050. 86-03-074 (Order 86-14), § 296-155-305, filed 1/21/86; Order 76-6, § 296-155-305, filed 3/1/76; Order 74-26, § 296-155-305, filed 5/7/74, effective 6/6/74.]

WAC 296-155-310 Barricades.

You must make sure that barricades used for the protection of employees meet the requirements of Part VI of the MUTCD.

[Statutory Authority: RCW 49.17.010, .040, .050, and .060. 16-09-085 (Order 15-08), § 296-155-310, filed 04/19/16, effective 05/20/16. Statutory Authority: RCW 49.17.010, .040, .050, and .060. 04-24-089 (Order 04-02), § 296-155-310, filed 12/01/04, effective 01/01/05.] Statutory Authority: RCW 49.17.010, 49.17.040, 49.17.050, and 49.17.060. 03-06-076 (Order 02-35), § 296-155-310, filed 03/04/03, effective 08/01/03. Statutory Authority: Chapter 49.17 RCW. 93-19-142 (Order 93-04), § 296-155-310, filed 9/22/93, effective 11/1/93; Order 74-26, § 296-155-310, filed 5/7/74, effective 6/6/74.]

WAC 296-155-315 Definitions applicable to this part.

Barricade. An obstruction to deter the passage of persons or vehicles.

Signs. The warnings of hazard, temporarily or permanently affixed or placed, at locations where hazards exist.

Signals. Moving signs, provided by workers, such as flaggers, or by devices, such as flashing lights, to warn of possible or existing hazards.

[Statutory Authority: RCW 49.17.010, .040, .050, and .060. 16-09-085 (Order 15-08), § 296-155-315, filed 04/19/16, effective 05/20/16. Statutory Authority: RCW 49.17.010, .040, .050, and .060. 04-24-089 (Order 04-02), § 296-155-315, filed 12/01/04, effective 01/01/05.] Statutory Authority: RCW 49.17.010, 49.17.040, 49.17.050, and 49.17.060. 03-06-076 (Order 02-35), § 296-155-315, filed 03/04/03, effective 08/01/03. Statutory Authority: Chapter 49.17 RCW. 94-15-096 (Order 94-07), § 296-155-315, filed 7/20/94, effective 9/20/94; Order 76-6, § 296-155-315, filed 3/1/76.]

PART F
STORAGE, USE AND DISPOSAL

LAST UPDATED: 05/20/2016

WAC 296-155-325 General requirements for storage. 1

WAC 296-155-335 Disposal of waste materials. 3

WAC 296-155-325 General requirements for storage.

(1) **General**.

(a) You must stack, rack, block, interlock, or otherwise secure materials stored in tiers to prevent sliding, falling or collapse.

(b) You must post conspicuously post maximum safe load limits of floors within buildings and structures, in pounds per square foot, in all storage areas, except for floor or slab on grade. You must not exceed maximum safe loads.

(c) You must keep aisles and passageways clear to provide for the free and safe movement of material handling equipment or employees. You must keep such areas in good repair.

(d) When a difference in road or working levels exist, you must use means such as ramps, blocking, or grading to ensure the safe movement of vehicles between the two levels.

(e) When necessary to store building material on public thoroughfares, you must exercise care to see that it is so piled or stacked as to be safe against collapse or falling over.

(f) You must locate material so as not to interfere with, or present a hazard to employees, traffic or the public.

(2) **Material storage.**

(a)

(i) You must not place material stored inside buildings under construction within 6 feet of any hoistway or inside floor openings, nor within 10 feet of an exterior wall which does not extend above the top of the material stored.

(ii) Temporary floors, used in steel erection, concrete forms and shoring (i.e., stripped forms, shoring jacks, clamps, steel rods or pipes, base plates, etc.) placed within close proximity to an open-sided floor for movement to another tier for placement, must be considered “in-process equipment” and subject to the provisions contained in Parts “O” and “P” of this standard. When this type equipment is to be left overnight or for longer periods of time it must be anchored and braced to prevent displacement in any direction. In addition this equipment must be subject to the provisions of this subsection while in “interim storage.”

(b) Each employee required to work on stored material in silos, hoppers, tanks, and similar storage areas must be equipped with personal fall arrest equipment meeting the requirements of chapter 296-155 WAC, Part C-1.

(c) You must segregate noncompatible materials storage.

(d) You must stack bagged materials by stepping back the layers and cross-keying the bags at least every 10 bags high.

(i) When cement and lime is delivered in paper bags you must carefully handle them to prevent the bags bursting.

(ii) You must not pile cement and lime bags more than 10 bags high except when stored in bins or enclosures built for the purpose of storage.

(iii) When bags are removed from the pile, you must keep the length of the pile at an even height, and the necessary step backs every 5 bags maintained.

(iv) Persons handling cement and lime bags must wear eye protection which prevents contact between the substance and the worker's eyes (such as goggles or other sealed eye protection) and must wear long sleeve shirts with close fitting collar and cuffs.

(v) You must warn workers against wearing clothing that has become hard and stiff with cement.

(vi) You must instruct workers to report any susceptibility of their skin to cement and lime burns.

(vii) You must provide a hand cream or Vaseline and eye wash and keep it ready for use to prevent burns.

(viii) You must store lime in a dry place to prevent a premature slacking action that may cause fire.

(e) You must not store materials on scaffolds or runways in excess of supplies needed for immediate operations.

(f) Brick stacks must not be more than 7 feet in height. When a loose brick stack reaches a height of 4 feet, it must be tapered back 2 inches in every foot of height above the 4-foot level.

(i) You must never stack brick, for storage purposes, on scaffolds or runways.

(ii) When delivering brick on scaffolds inside the wall lines in wheelbarrows, you must dump them toward the inside of the building and not toward the wall.

(iii) You must always stack blocks and not throw them in a loose pile.

(g) When masonry blocks are stacked higher than 6 feet, the stack must be tapered back one-half block per tier above the 6-foot level.

(i) When blocks are stacked inside a building, you must distribute the piles so as not to overload the floor on which they stand.

(ii) Blocks must not be dropped or thrown from an elevation or delivered through chutes.

(h) Lumber:

(i) Used lumber must have all nails withdrawn before stacking.

(ii) You must stack lumber on level and solidly supported sills.

(iii) You must stack lumber so as to be stable and self-supporting.

(iv) Lumber stacks must not exceed 20 feet in height provided that lumber to be handled manually must not be stacked more than 16 feet high.

(v) You must stack all stored lumber on timber sills to keep it off the ground. You must place sills level on solid supports.

(vi) You must place cross strips in the stacks when they are stacked more than 4 feet high.

(i) You must stack and block structural steel, poles, pipe, bar stock, and other cylindrical materials, unless racked, so as to prevent spreading or tilting.

(i) Persons handling reinforcing steel must wear heavy gloves.

(ii) When bending of reinforcing steel is done on the job, you must provide a strong bench, set up on even dry ground or a floor for the persons to work on.

(iii) You must carefully pile structural steel to prevent danger of members rolling off or the pile toppling over.

(iv) You must keep structural steel in low piles, consideration being given to the sequence of use of the members.

(v) You must stack corrugated and flat iron in flat piles, with the piles not more than 4 feet high and spacing strips must be placed between each bundle.

(j) Sand, gravel and crushed stone.

(i) You must frequently inspect stock piles to prevent their becoming unsafe by continued adding to or withdrawing from the stock.

(ii) If material becomes frozen, you must not remove it in a manner that would produce an overhang.

[Statutory Authority: RCW 49.17.010, .040, .050, and .060. 16-09-085 (Order 15-08), § 296-155-325, filed 04/19/16, effective 05/20/16. Statutory Authority: RCWs 49.17.010, 49.17.040, 49.17.050, 49.17.440 and 49.17.060. 12-01-086 (AO 08-32), § 296-155-325, filed 12/20/11, effective 02/01/12. Statutory Authority: Chapter 49.17 RCW. 95-10-016, § 296-155-325, filed 4/25/95, effective 10/1/95; 94-15-096 (Order 94-07), § 296-155-325, filed 7/20/94, effective 9/20/94. Statutory Authority: RCW 49.17.040 and 49.17.050. 86-03-074 (Order 86-14), § 296-155-325, filed 1/21/86; Order 74-26, § 296-155-325, filed 5/7/74, effective 6/6/74.]

WAC 296-155-335 Disposal of waste materials.

(1) Whenever materials are dropped more than 20 feet to any point lying outside the exterior walls of the building, you must use an enclosed chute of wood, or equivalent material, . For the purpose of this subsection, an enclosed chute is a slide, closed in on all sides, through which material is moved from a high place to a lower one.

(2) When debris is dropped without the use of chutes, the area onto which the material is dropped must be completely enclosed with barricades not less than 42 inches high and not less than 20 feet back from the projected edge of the opening above. You must post signs warning of the hazard of falling materials at each level. Removal must not be permitted in this lower area until debris handling ceases above.

(3) You must remove all scrap lumber, waste material, and rubbish from the immediate work area as the work progresses.

(4) Disposal of waste material or debris by burning must comply with local fire regulations.

(5) You must keep all solvent waste, oily rags, and flammable liquids in fire resistant covered containers until removed from the worksite.

[Statutory Authority: RCW 49.17.010, .040, .050, and .060. 16-09-085 (Order 15-08), § 296-155-335, filed 04/19/16, effective 05/20/16. Statutory Authority: RCW 49.17.040 and 49.17.050. 86-03-074 (Order 86-14), § 296-155-335, filed 1/21/86; Order 74-26, § 296-155-335, filed 5/7/74, effective 6/6/74.]

PART F-1
RIGGING REQUIREMENTS FOR MATERIAL HANDLING

Last Updated: 05/20/2016

WAC 296-155-336 Rigging requirements for material handling. 1

WAC-296-155-33600 Scope. 1

WAC 296-155-33605 Definitions. 1

WAC 296-155-337 Rigging--General requirements. 4

WAC 296-155-33700 Rigger qualifications. 4

WAC 296-155-338 Slings..... 6

WAC 296-155-33800 Chain slings. 6

WAC 296-155-33805 Wire rope slings. 12

WAC 296-155-33810 Metal mesh slings. 24

WAC 296-155-33815 Synthetic rope slings. 27

WAC 296-155-33820 Synthetic webbing slings. 33

WAC 296-155-33825 Synthetic roundslings. 37

WAC 296-155-339 Rigging hardware and lifting devices other than slings and rigging hardware. 41

WAC 296-155-33900 General requirements. 41

WAC 296-155-33905 Shackles. 43

WAC 296-155-33910 Adjustable hardware. 45

WAC 296-155-33915 Compression hardware. 50

WAC 296-155-33920 Links, rings, and swivels. 52

WAC 296-155-33925 Rigging blocks. 53

WAC 296-155-340 Lifting devices other than slings and rigging hardware. 54

WAC 296-155-34005 Structural and mechanical lifters. 54

WAC 296-155-34010 Vacuum lifters. 59

WAC 296-155-34015 Close proximity lifting magnets. 65

WAC 296-155-34020 Remotely operated lifting magnets. 70

WAC 296-155-34025 Scrap and material handling grapples. 73

WAC 296-155-336 Rigging requirements for material handling.

[Statutory Authority: RCW 49.17.010, .040, .050, and .060. 13-02-068 (Order 12-14), § 296-155-336, filed 12/31/12, effective 02/01/13].

WAC-296-155-33600 Scope.

(1) This part applies to material/load handling activities when using slings, rigging hardware, below-the-hook lifting devices when performing construction activities.

(2) This part does not apply to power-operated cranes and derricks when performing construction activities that fall under the scope of Part L of this chapter.

[Statutory Authority: RCW 49.17.010, .040, .050, and .060. 13-02-068 (Order 12-14), § 296-155-33600, filed 12/31/12, effective 02/01/13].

WAC 296-155-33605 Definitions.

Angle of loading. The acute angle between horizontal and the leg of the rigging, often referred to as horizontal angle. See Figures 7 and 22.

Anti two-block device. A device that, when activated, disengages all crane functions whose movement can cause two-blocking.

Basket hitch. A method of rigging a sling in which the sling is passed around the load and both loop eyes or end fittings are attached to the lifting device.

Below-the-hook lifting device. A device used for attaching loads to a hoist. The device may contain components such as slings, hooks, rigging hardware, and lifting attachments.

Bird caging. The twisting of fiber or wire rope in an isolated area of the rope in the opposite direction of the rope lay, thereby causing it to take on the appearance of a bird cage.

Braided wire rope. A wire rope formed by plaiting component wire ropes.

Bridle wire rope sling. A sling composed of multiple legs with the top ends gathered in a fitting that goes over the lifting hook.

Cable laid endless sling-mechanical joint. A wire rope sling made endless from one continuous length of cable laid rope with the ends joined by one or more metallic fittings.

Cable laid grommet-hand tucked. An endless wire rope sling made from one continuous length of rope formed to make a body composed of six ropes around a rope core. The rope ends are tucked into the body, thus forming the core. No sleeves are used.

Center of gravity. The center of gravity of any object is the point in the object around which its weight is evenly distributed. If you could put a support under that point, you could balance the object on the support.

Choker hitch. A method of rigging a sling in which the sling is passed around the load, then through one loop eye, end fitting, or other device, with the other loop eye or end fitting attached to the lifting device. This hitch can be done with a sliding choker hook or similar device.

Come-a-long. A mechanical device typically consisting of a chain or cable attached at each end that is used to facilitate movement of materials through leverage.

Competent person. One who is capable of identifying existing and predictable hazards in the surroundings or working conditions which are unsanitary, hazardous, or dangerous to employees, and who has authorization to take prompt corrective measures to eliminate them.

Cross rod. A wire used to join spirals of metal mesh to form a complete fabric. See Figure 11.

Design factor. The ratio between nominal or minimum breaking strength and rated load.

Electrical contact. When a person, object, or equipment makes contact or comes close in proximity with an energized conductor or equipment that allows the passage of current.

Fabric (metal mesh). The flexible portion of the sling exclusive of end fittings consisting of a series of transverse spirals and cross rods.

Fall zone. The area (including, but not limited to, the area directly beneath the load) in which it is reasonably foreseeable that partially or completely suspended materials could fall in the event of an accident.

Flange points. A point of contact between rope and drum flange where the rope changes layers.

Hitch (hitched). A method of rigging (attaching) a sling temporarily to a load or object for the purpose of lifting.

Hoist. A mechanical device for lifting and lowering loads by winding rope onto or off a drum.

Hoisting. The act of raising, lowering or otherwise moving a load in the air with equipment covered by this standard. As used in this standard, “hoisting” can be done by means other than wire rope/hoist drum equipment.

Hoisting equipment. A machine for lifting and lowering a load and moving it horizontally. The machine may be fixed or mobile and be driven manually, by power, or by a combination of both.

Hook latch. A mechanical device used to close the throat opening of a hook.

Load. The weight of the object being lifted or lowered, including the weight of the load-attaching equipment such as the load block, ropes, slings, shackles, and any other auxiliary attachment.

Load ratings. A set of rated loads for stipulated hoisting equipment configurations and operating conditions.

Master coupling link. An alloy steel welded coupling link used as an intermediate link to join alloy steel chain to master links.

Master link. Forged or welded steel link used to support all members (legs) of an alloy steel chain sling or wire rope sling.

Mechanical coupling link (alloy steel chain). A nonwelded, mechanically closed link used primarily to attach fittings to alloy steel chain.

Operational controls. Levers, switches, pedals and other devices for controlling equipment operation.

Procedures. Include, but are not limited to: Instructions, diagrams, recommendations, warnings, specifications, protocols, and limitations.

Qualified person. A person who, by possession of a recognized degree, certificate, or professional standing, or who by extensive knowledge, training and experience, successfully demonstrated the ability to solve/resolve problems relating to the subject matter, the work, or the project.

Qualified rigger. A rigger who meets the requirements in WAC 296-155-33700.

Rated capacity. The maximum working load permitted by the manufacturer under specified working conditions. Such working conditions typically include a specific combination of factors such as equipment configuration, radii, boom length, and other parameters of use.

Rotation resistant rope. A type of wire rope construction which reduces the tendency of a rope to rotate about its axis under load. Usually, this consists of an inner system of core strands laid in one direction covered by an outer system of strands laid in the opposite direction.

RPE. A registered professional engineer licensed under RCW 18.43.040(1).

RPSE. A registered professional structural engineer licensed under RCW 18.43.040(1).

Running wire rope. A wire rope that moves over sheaves or drums.

Safety or health standard. A standard adopted under this chapter.

Section. A section of this part, unless otherwise specified.

Sling. An assembly to be used for lifting when connected to a lifting mechanism. The upper portion of the sling is connected to the lifting mechanism and the lower supports the load, as described in this part.

Spiral. A single transverse coil that is the basic element from which metal mesh is fabricated.

Standing wire rope. A supporting wire rope which maintains a constant distance between the points of attachment to the two components connected by the wire rope.

Two blocking. A condition in which a component that is uppermost on the hoist line such as the load block, hook block, overhaul ball, or similar component, comes in contact with the boom tip, fixed upper block or similar component. This binds the system and continued application of power can cause failure of the hoist rope or other component.

Vertical hitch. A method of rigging a sling in which the load is attached to the loop eye or end fitting at one end of the sling and the loop eye or end fitting at the other end is attached to the lifting device. Any hitch less than five degrees from the vertical may be considered a vertical hitch.

Wire rope. A flexible rope constructed by laying steel wires into various patterns of multiwired strands around a core system to produce a helically wound rope.

Working load. The external load applied to the hoisting equipment, including the personnel lifting platform, its contents, and the load attaching equipment, such as lowered load block, shackles, and slings.

[Statutory Authority: RCW 49.17.010, .040, .050, and .060. 16-09-085 (Order 15-08), § 296-155-33605, filed 04/19/16, effective 05/20/16. Statutory Authority: RCW 49.17.010, .040, .050, and .060. 13-02-068 (Order 12-14), § 296-155-33605, filed 12/31/12, effective 02/01/13].

WAC 296-155-337 Rigging--General requirements.

[Statutory Authority: RCW 49.17.010, .040, .050, and .060. 13-02-068 (Order 12-14), § 296-155-337, filed 12/31/12, effective 02/01/13].

WAC 296-155-33700 Rigger qualifications.

Riggers must be a qualified person who, by possession of a recognized degree or certificate of professional standing, or who, by extensive knowledge, training, and experience, has successfully demonstrated the ability to solve or resolve problems relating the subject matter. Also has the authorization or authority by the nature of their position to take prompt corrective measures to eliminate them. The person must be knowledgeable in the requirements of this part as applicable to the tasks assigned, including but not limited to:

- Know and understand of the requirements for slings, rigging hardware, and below-the-hook lifting devices, including their limitations, rigging practices, associated hazards, and inspection requirements;
- Know and understand the application of the type of hitches used;
- Know and understand load weight estimation, center of gravity, effect of angle on rigging components, and load turning.

[Statutory Authority: RCW 49.17.010, .040, .050, and .060. 13-02-068 (Order 12-14), § 296-155-33700, filed 12/31/12, effective 02/01/13].

WAC 296-155-33705 General requirements.

(1) You must ensure all rigging activities covered under this part are performed by a qualified rigger or performed under the direction and supervision of a qualified rigger.

(2) All slings in use must meet the applicable requirements for design, inspection, construction, testing, maintenance and operation as prescribed in ASME B30.9-2010.

(3) All rigging hardware in use must meet the applicable requirements for design, inspection, construction, testing, maintenance and operation as prescribed in ASME B30.26-2010.

(4) All rigging gear must be used in accordance with the manufacturer's recommendations or a qualified person.

(5) All below-the-hook lifting devices in use must meet the applicable requirements for design, inspection, construction, testing, maintenance and operation as prescribed in ASME B30.20-2010.

(6) All hooks in use must meet the applicable requirements for design, inspection, construction, testing, maintenance and operation as prescribed in ASME B30.10-2009.

(7) Repair of hooks must be approved by the manufacturer or qualified person and as follows:

(a) Cracks, nicks, and gouges may be repaired by a competent person, all other repairs are done by the manufacturer or a qualified person;

(b) Grind longitudinally, following the contour of the hook;

(c) Do not reduce the dimension of the hook more than 10% from the original.

(8) Hooks must not be modified by welding and/or drilling unless written approval by the manufacturer has been received.

(9) A qualified person must inspect the rigging equipment before each day or shift and:

(a) Consider the application the equipment will be used for, and determine if it's safe for use;

(b) Remove the equipment from service if using it will create a hazard or meets any of the removal criteria listed in this chapter.

(10) The rated load of the rigging equipment must not be exceeded.

(11) All rigging hardware must be inspected in accordance with Table 1, each day before using. If a daily inspection is not feasible because the hardware is in a semipermanent or inaccessible location, a periodic inspection is allowed instead of daily.

(12) Rigging hardware must be removed from service when it shows any conditions listed in Table 1, or any other hazardous condition.

Table 1 Rigging Hardware Inspection/Removal Criteria For all hardware, inspect for the following:
Missing or illegible identification.
Indications of heat damage, including weld spatter or arc strikes.
Excessive pitting or corrosion.
Load bearing components that are: • Bent; • Twisted; • Distorted; • Stretched; • Elongated; • Cracked; • Broken.
Excessive nicks or gouges. 10% reduction of the original or catalog dimension at any point. Excessive thread damage or wear, where applicable. Evidence of unauthorized welding or modification. Any other conditions that cause doubt as to the safety of continued use. On **shackles,** also inspect for incomplete pin engagement. On **swivels and swivel hoist rings,** check for lack of ability to freely rotate or pivot.
On **compression hardware,** also check for: • Unauthorized replacement components; • Insufficient number of wire rope clips • Improperly tightened wire rope clips; • Damaged wire rope; • Indications of wire rope slippage; • Improper assembly.

Table 1 Rigging Hardware Inspection/Removal Criteria For all hardware, inspect for the following: (Continued)
On **swivels,** check for loose or missing nuts, bolts, cotter pins, snap rings, or other fasteners and retaining devices.
On **blocks** check for: • Loose or missing nuts, bolts, cotter pins, snap rings, or other fasteners and retaining devices; • Misalignment or wobble in sheaves; • Excessive sheave groove corrugation or wear.

(13) Any alteration or modification of rigging hardware must be in accordance with the hardware manufacturer or a qualified person and proof load tested to one 125%. This test must be documented and available upon request.

(14) Welding of rigging hardware is prohibited unless authorized by the manufacturer or an RPE.

(15) Replacement parts must meet or exceed the original rigging hardware manufacturer's specifications.

(16) Rigging hardware selection must have the characteristics suitable for the application and environment where it will be used.

(17) Workers must keep all parts of their body from between the load and any rigging during the lift.

(18) If handling intermodal shipping containers at a construction site, the you must follow the requirements in chapter 296-56 WAC, longshore, stevedore and waterfront related operations, Part F, Specialized terminals and the guidelines found in International Organization for Standardization (ISO) 3874 - Series 1 Freight Containers, fifth edition - Handling and Securing.

[Statutory Authority: RCW 49.17.010, .040, .050, and .060. 16-09-085 (Order 15-08), § 296-155-33705, filed 04/19/16, effective 05/20/16. Statutory Authority: RCW 49.17.010, .040, .050, and .060. 13-02-068 (Order 12-14), § 296-155-33705, filed 12/31/12, effective 02/01/13].

WAC 296-155-338 Slings.

[Statutory Authority: RCW 49.17.010, .040, .050, and .060. 13-02-068 (Order 12-14), § 296-155-338, filed 12/31/12, effective 02/01/13].

WAC 296-155-33800 Chain slings.

(1) Only use chain slings that are made from grade 80 or higher alloy steel chain.

(2) The following requirements must be met if manufacturing your own chain slings:

(a) Have a design factor of 4;

(b) Meet the rated load requirements in subsection (9) of this section.

(3) Rate chain slings with the load capacity of the lowest rated component of the sling. For example, if you use fittings that are rated lower than the sling material itself, identify the sling with the lower rated capacity.

(4) Makeshift fittings, such as hooks or links formed from bolts, rods, or other parts are prohibited.

(5) All chain slings must have legible identification information attached to the sling which includes the following information:

(a) Name or trademark of the manufacturer;

(b) Grade;

(c) Nominal chain size;

(d) Number of legs;

(e) Rated loads for the vertical hitch and bridle hitch and the angle upon which it is based;

(f) Length (reach);

(g) Individual sling identification (e.g., serial numbers);

(h) Repairing agency, if the sling was ever repaired.

(6) **Inspections.**

(a) A qualified person must inspect chain slings before their initial use, according to Table 2, both:

(i) When the sling is new; and

(ii) Whenever a repair, alteration, or modification has been done.

(b) A qualified person must perform a visual inspection for damage, each day or shift the chain sling is used. Immediately remove from service any sling damaged beyond the criteria in Table 2.

(c) A qualified person must perform periodic inspections on chain slings according to Table 2.

(i) Each link and component must be examined individually, taking care to expose and examine all surfaces including the inner link surfaces.

(ii) Remove slings from use:

- If any of the conditions in Table 2 are found;
- When they have been exposed to temperatures above one thousand degrees Fahrenheit.

(d) A written record of the most recent periodic inspection must be kept, including the condition of the sling.

Note: An external code mark on the sling is an acceptable means of recording the inspection as long as the code can be traced back to a record.

Table 2 Chain Sling Inspection Removal Criteria	
Inspect alloy steel chain slings for the following conditions:	**Perform inspections:**
• Missing or illegible sling identification. • Cracks or breaks.	
• Excessive nicks, gouges, or wear beyond that allowed in Table 3, Minimum Allowable Thickness at Any Point on a Link.	• At least once a year for slings in normal service, which means use within the rated load.
• Stretched chain links or components.	• At least once a quarter for slings in severe service, which involves abnormal operating conditions.
• Bent, twisted or deformed chain links or components.	• As recommended by a qualified person for slings in special service, which is anything other than normal or severe.
• Evidence of heat damage.	
• Excessive pitting or corrosion • Inability of chain or components to hinge (articulate) freely. • Weld splatter.	
• Hooks that have any of the following conditions: – Any visibly apparent bend or twist from the plane of the unbent hook. – Any distortion causing an increase in throat opening of 5%, not to exceed 1/4 inch, or as otherwise recommended by the manufacturer; – Wear exceeding 10% of the original section dimension of the hook or its load pin, or as otherwise recommended by the manufacturer; – A self-locking mechanism that does not lock (if applicable); – Any latch that does not close the hook's throat (if applicable). • Other visible damage that raises doubt about the safety of the sling.	

Table 3 Minimum Allowable Thickness at Any Point on a Link			
Nominal chain or coupling link size		**Minimum allowable thickness at any point on the link**	
Inches	Millimeters	Inches	Millimeters
7/32	5.5	0.189	4.80
9/32	7	0.239	6.07
5/15	8	0.273	6.93
3/8	10	0.342	8.69
1/2	13	0.443	11.26
5/8	16	0.546	13.87
3/4	20	0.687	17.45
7/8	22	0.750	19.05
1	26	0.887	22.53
1 1/4	32	1.091	27.71

(7) **Repair, alterations, or modifications.**

(a) You must repair chain slings as follows:

(i) Slings must only be repaired by the manufacturer or a qualified person;

(ii) Chain used for sling repair must be alloy steel chain manufactured and tested in accordance with ASTM A 391/A 391M for Grade 80 chain and ASTM A 973/A 973M for Grade 100 chain;

(iii) Components for alloy steel chain slings must be manufactured and tested in accordance with ASTM A 952/A 952M;

(iv) The use of mechanical coupling links within the body of a chain sling to connect two pieces of chain is prohibited;

(v) Replace cracked, broken, or bent chain links or components instead of repairing them.

(b) The sling must be marked to show the repairing agency.

(c) Repaired slings must be proof tested according to the requirements in subsection (8) of this section. If only replacing components of the sling, and the components were individually proof tested, the sling does not have to be tested as a whole.

Note: For additional requirements relating to repair and modification see WAC 296-155-33705(9).

(8) **Proof test chain slings**. Prior to initial use, all new and repaired chain and components of an alloy steel chain sling, either individually or as an assembly must be proof tested by the sling manufacturer or a qualified person. Follow the requirements in Table 4, Chain Sling Proof Load Requirements.

Table 4 Chain Sling Proof Load Requirements	
When proof testing this type of equipment:	**Then proof load:**
• Single or multiple leg slings. • Components attached to single legs.	Each leg and component to at least two times the single leg vertical hitch rated load.
• Master links for double leg bridle slings. • Single basket slings. • Master couplings for links connected to two legs.	To at least 4 times the single leg vertical hitch rated load.
• Master links for triple and quadruple leg bridle slings. • Double basket bridle sling.	To at least 6 times the single leg vertical hitch rated load.

(9) Chain slings rated loads, the term "working load limit" is commonly used to describe rated load.

> *Note: Rated loads are based on the following factors:*
>
> - *Strength of sling materials;*
> - *Design factor;*
> - *Type of hitch;*
> - *Angle of loading.*

(a) Chain slings must be used within the rated loads shown in Tables 1 through 4 of ASME B30.9-2010. For angles that are not shown in these tables, either use the rated load for the next lower angle or one calculated by a qualified person.

(b) The use of horizontal sling angles less than 30 degrees are prohibited, unless recommended by the sling manufacturer or a qualified person. See Figure 1, Multiple-Leg Bridle Sling Hitch.

(c) Rated loads must be verified for slings used in a choker meet the values shown in the above referenced tables provided that the angle of choke is 120 degrees or greater. See Figure 2, Single-Leg Choker Hitch.

(d) Rated loads for angles of choke less than 120 degrees must be determined by the manufacturer or a qualified person.

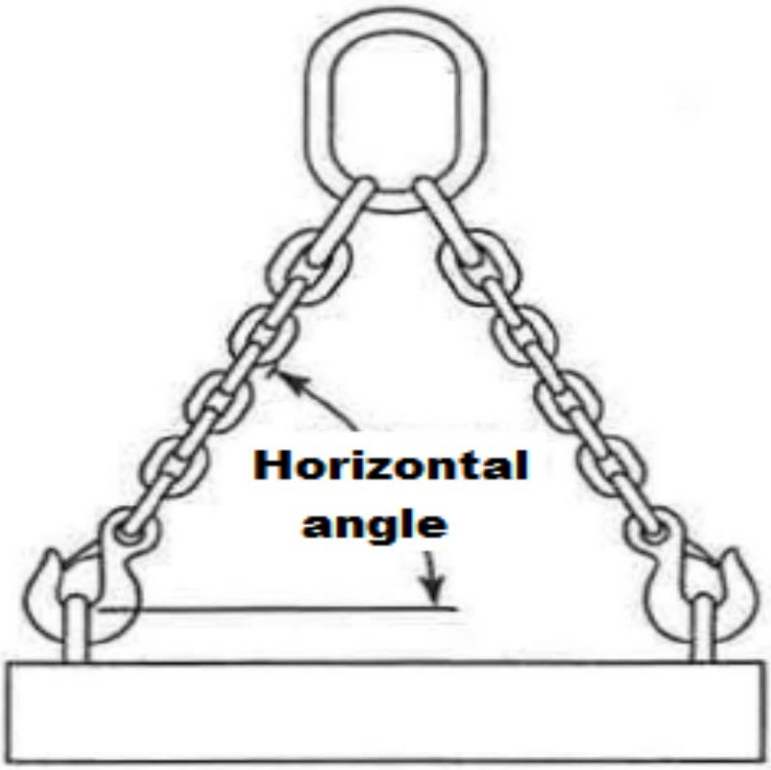

Figure 1-Multiple-Leg Bridle Hitch

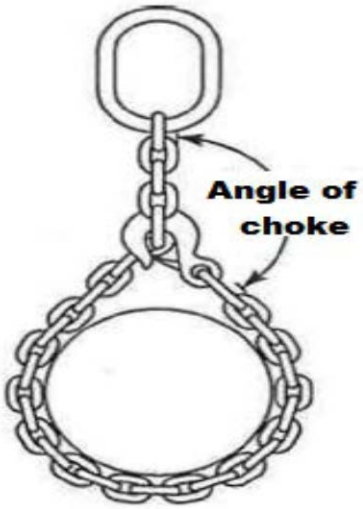

Figure 2-Single-Leg Choker Hitch

(10) **Use of chain slings.**

(a) You must shorten or adjust slings using only methods approved by the manufacturer or a qualified person.

(b) You must not shorten or lengthen slings by knotting or twisting.

(c) You must avoid twisting and kinking.

(d) You must hitch slings in a way that provides control of the load.

(e) You must balance the load in slings used in a basket hitch to prevent it from slipping.

(f) You must protect slings from sharp edges of the load. See Figure 3.

(g) You must prevent the sling from snagging anything during the lift, with or without load.

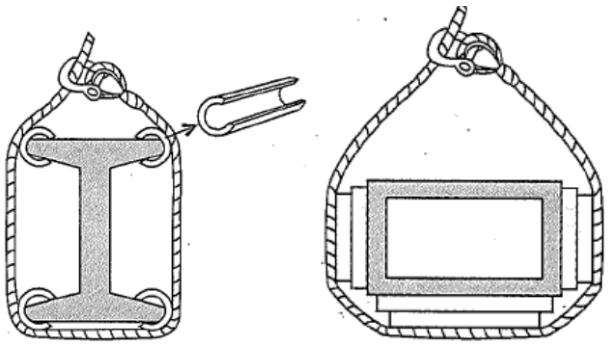

Softeners can be made from split pipe, padding or blocking

Figure 3-Softeners

Statutory Authority: RCW 49.17.010, .040, .050, and .060. 16-09-085 (Order 15-08), § 296-155-33800, filed 04/19/16, effective 05/20/16. Statutory Authority: RCW 49.17.010, .040, .050, and .060. 13-02-068 (Order 12-14), § 296-155-33800, filed 12/31/12, effective 02/01/13].

WAC 296-155-33805 Wire rope slings.

(1) **Manufacturing wire rope slings.**

(a) Wire rope slings must be made from new or unused regular lay wire rope. The wire rope must be manufactured and tested in accordance with ASTM A 1023-02 and ASTM A 586.

(b) The following fabrication methods must be used to make wire rope slings:

(i) Hand splicing;

(ii) Turnback eye;

(iii) Return loop;

(iv) Flemish eye mechanical splicing;

(v) Poured or swaged socketing.

(c) Wire rope slings must have a design factor of 5.

(d) Wire rope slings must meet the requirements in Table 6.

(e) Using any of the following when making wire rope slings is prohibited:

(i) Rotation resistant wire rope;

(ii) Malleable cast iron clips;

(iii) Knots;

(iv) Wire rope clips, unless:

- The application of the sling prevents using prefabricated slings;
- The specific application is designed by a qualified person.

(f) Wire rope clips, if used, must be installed and maintained in accordance with the recommendations of the clip manufacturer or a qualified person, or in accordance with the provisions of ASME B30.26-2010.

(g) You must not use slings made with wire rope clips as a choker hitch.

Note: If using wire rope clips under these conditions, follow the guidance given in Table 5.

Table 5

Number, Torque Values, and Turn Back Requirements for U-Bolt Wire Rope Clips

Clip & Wire Rope Size (inches)	Min. No. of Clips	Amount of Rope Turn Back in Inches	* Torque in Ft. Lbs.
1/8	2	3-1/4	4.5
3/16	2	3-3/4	7.5
1/4	2	4-3/4	15
5/16	2	5-1/4	30
3/8	2	6-1/2	45
7/16	2	7	65
1/2	3	11-1/2	65
9/16	3	12	95
5/8	3	12	95
3/4	4	18	130
7/8	4	19	225
1	5	26	225
1-1/8	6	34	225
1-1/4	7	44	360
1-3/8	7	44	360
1-1/2	8	54	360
1-5/8	8	58	430
1-3/4	8	61	590
2	8	71	750
2-1/4	8	73	750
2-1/2	9	84	750
2-3/4	10	100	750
3	10	106	1200
3-1/2	12	149	1200

Number, Torque Values and Turn Back Requirements for Double Saddle (Fist Grip) Wire Rope Clips

Clip & Wire Rope Size (inches)	Min. No. of Clips	Amount of Rope Turn Back in Inches	* Torque in Ft. Lbs.
3/16-1/4	2	4	30
5/16	2	5	30
3/8	2	5-1/4	45
7/16	2	6-1/2	65
1/2	3	11	65
9/16	3	12-3/4	130
5/8	3	131/2	130
3/4	4	16	225
7/8	4	26	225
1	5	37	225
1-1/8	5	41	360
1-1/4	6	55	360
1-3/8	6	62	500
1-1/2	7	78	500

* The tightening torque values shown are based upon the threads being clean, dry, and free of lubrication.

Table 6 Wire Rope Sling Configuration Requirements	
If you have:	**Then you need:**
• Slings made of rope with 6 x 19 and 6 x 36 classification • Cable laid slings	A minimum clear length of rope 10 times the rope diameter between splices, sleeves, or end fittings (See Figure 15, Minimum Sling Length) unless approved by a qualified person.
• Braided slings	A minimum clear length of rope 40 times the component rope diameter between the loops or end fittings (See Figure 16, Minimum Braided Sling Length) unless approved by a qualified person.
• Grommets and endless slings	A minimum circumferential length of 96 times the body diameter of the grommet or endless sling unless approved by a qualified person
• Other configurations	Specific limitation data provided by a qualified person. These slings must meet all other requirements of ASME B30.9, 2010.

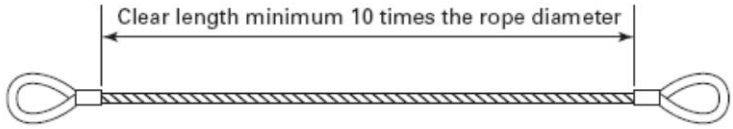

Figure 4-Minimum Sling Length For rope with 6x19 and 6x36 classification or Cable Laid Slings

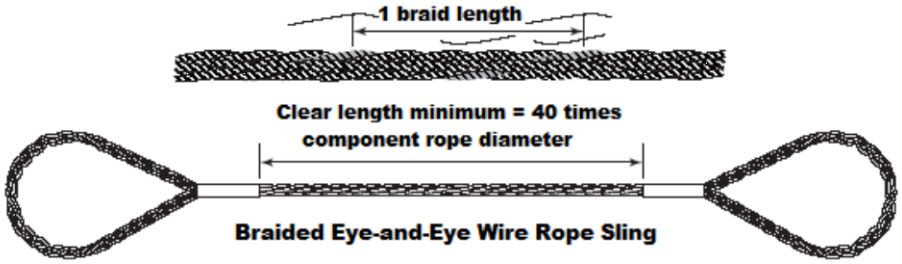

Figure 5-Minimum Braided Sling Length

(2) **Wire rope sling fittings.**

(a) You must use fittings according to the fitting manufacturer's directions.

(b) You must rate slings with the load capacity of the lowest rated component of the sling. For example, if you use fittings that are rated lower than the sling material itself, identify the sling with the lower rated capacity.

(c) You must weld any end attachments, except covers to thimbles, before assembling the sling.

(3) **Identification information**. All wire rope slings must have legible identification information attached to the sling which includes the information below, see sample tag in Figure 6. For slings in use that are manufactured before the effective date of this rule, the information below must be added before use or at the time the periodic inspection is completed.

(a) Name or trademark of the manufacturer.

(b) Diameter or size.

(c) Rated loads for the types of hitches used and the angle that the load is based on.

(d) Number of legs, if more than one.

(e) Repairing agency, if the sling is ever repaired.

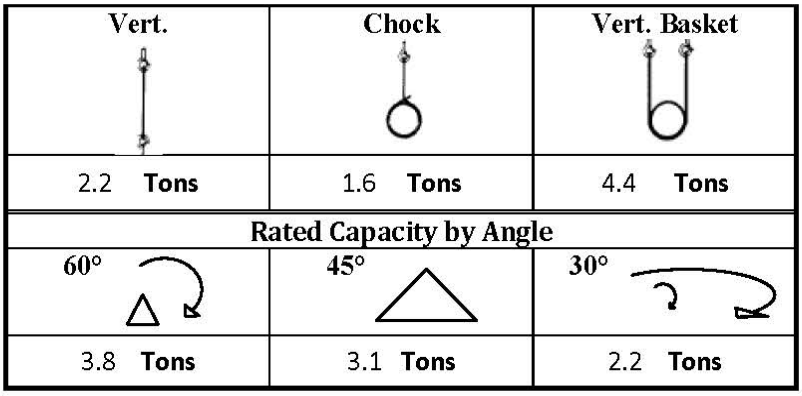

Figure 6-Sample Wire Rope Sling ID Tag

Note:	*Sample tag for a 1/2" single-leg sling 6x19 or 6x36 classification, extra improved plow steel (EIPS) grade fiber core (FC) wire rope with a mechanical splice (ton .= 2,000 lb).*

(4) **Inspection.**

(a) A qualified person must inspect wire rope slings before their initial use, according to Table 7, both:

(i) When the sling is new; and

(ii) Whenever a repair, alteration, or modification has been done.

(b) A qualified person must perform a visual inspection for damage, each day or shift the wire rope sling is used:

(i) Include all fastenings and attachments;

(ii) Immediately remove any sling from service that is damaged beyond the criteria listed in Table 7; or

(iii) Remove fiber core wire rope slings that have been exposed to temperatures higher than 180 degrees Fahrenheit.

(c) A qualified person must perform periodic inspections on wire rope slings according to Table 7.

(5) **Repair, alterations, or modifications.**

(a) You must repair wire rope slings as follows:

(i) Make sure slings are only repaired by the sling manufacturer or a qualified person;

(ii) Mark the sling to show the repairing agency;

(iii) Do not repair wire rope used in slings, wire rope must be replaced. Only end attachments and fittings can be repaired on a wire rope sling.

(b) You must consider modification or alterations to end attachments or fittings as repairs and must conform to all other provisions of this part.

(c) You must proof load test repaired slings according to the requirements in subsection (6) of this section.

(6) **Proof load tests**. You must make sure the sling manufacturer or a qualified person proof load tests the following slings before initial use, according to Table 8:

(a) All repaired slings;

(b) All slings incorporating previously used or welded fittings;

(c) For single- or multiple-leg slings and endless slings, each leg must be proof loaded according to the requirements listed in Table 8 based on fabrication method. The proof load test must not exceed 50% of the component ropes' or structural strands' minimum breaking strength;

Table 7 Wire Rope Sling Inspection and Removal Criteria	
Inspect wire rope slings for the following conditions:	**Perform inspections:**
• Missing or illegible sling identification • Severe localized abrasion or scraping • Kinking, crushing, birdcaging, or any other condition resulting in damage to the rope structure • Evidence of heat damage • Severe corrosion of the rope, end attachments, or fittings • End attachments that are cracked, deformed, or worn to the extent that the strength of the sling is substantially affected • Broken wires: – For strand-laid and single-part slings, 10 randomly distributed broken wires in one rope lay, or 5 broken wires in one strand in one rope lay. – For cable-laid slings, 20 broken wires per lay. – For 6-part braided slings, 20 broken wires per braid. – For 8-part braided slings, 40 broken wires per braid. • Hooks that have any of the following conditions: – Any visibly apparent bend or twist from the plane of the unbent hook – Any distortion causing an increase in throat opening 5% , not to exceed 1/4 inch, or as recommended by the manufacturer – Wear exceeding 10%, of the original section dimension of the hook or its load pin, or as recommended by the manufacturer – Self-locking mechanism that does not lock. • Other visible damage that raises doubt about the safety of the sling	• At least once a year for slings in normal service • At least once a quarter for slings in severe service • As recommended by a qualified person for slings in special service.

Table 8 Wire Rope Sling Proof Load Test Requirements	
Type of equipment:	**Proof load test:**
• Mechanical splice slings	Each leg to at least two times the single-leg vertical hitch rated load.
• Swaged socket and poured socket slings.	Each leg to at least two times, but not more than two and 1/2 times, the single-leg vertical hitch rated load
Note: For mechanical splice, swaged socket and poured socket slings follow the rope manufacturer's recommendations for proof load testing provided that it is within the above-specified proof load range, including (c) of this subsection.	
• Hand tucked slings, if proof load tested.	To at least one, but not more than one and 1/4, times the single-leg vertical hitch rated load.

(d) The proof load test for components (fittings) attached to single legs must meet the requirements in (c) of this subsection;

(e) Proof load testing for master links must be in accordance with Table 9.

Table 9 Proof Load Test for Master Links on Wire Rope Slings	
• Master links for two-leg bridle slings	To at least 4 times the single-leg vertical hitch rated load
• Master links for 3-leg bridle slings	To at least 6 times the single-leg vertical hitch rated load.
• Master links for 4-leg bridle slings	To at least 8 times the single-leg vertical hitch rated load

(7) **Rated load**. The term “rated capacity” is commonly used to describe rated load.

Note: Rated loads are based on the following factors:

- *Strength of sling material;*
- *Design factor;*
- *Type of hitch;*
- *Angle of loading (see Figure 7, Angle of Loading);*
- *Diameter of curvature over which the sling is used (D/d) (see Figure 8, D/d ratio);*
- *Fabrication efficiency.*

(a) You must use wire rope slings within the rated loads shown in Tables 7 through 15 in ASME B30.9-2010. For angles that are not shown in these tables, either use the rated load for the next lower angle or have a qualified person calculate the rated load.

(b) You must prohibit the use of horizontal sling angles less than 30 degrees unless recommended by the sling manufacturer or a qualified person. See Figure 7.

(c) Rated loads for slings used in a choker hitch must conform to the values shown in the above referenced tables, provided that the angle of choke is 120 degrees or greater. See Figure 9 and Table 10, Angle of Choke.

(d) You must use either Figure 9 and Table 10, the manufacturer, or a qualified person to determine the rated load if the angle of choke in a choker hitch is less than 120 degrees.

(i) You must inspect the entire length of the sling including splices, end attachments, and fittings.

(ii) You must remove slings from use if any of the conditions in Table 7 are found.

(iii) You must keep a record of the most recent periodic inspection available, including the condition of the sling.

Note: An external code mark on the sling is an acceptable means of recording the inspection as long as the code can be traced back to a record.

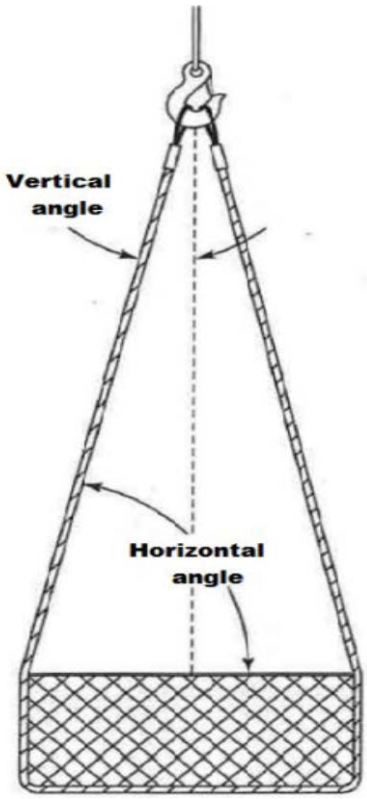

Figure 7-Angle of Loading

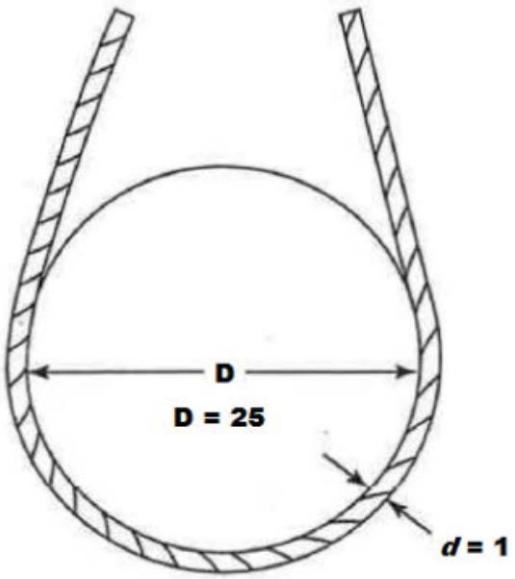

Figure 8-D/*d*/Ratio

Note: When D is 25 times the component rope diameter (d) the D/d ratio is expressed as 25/1.

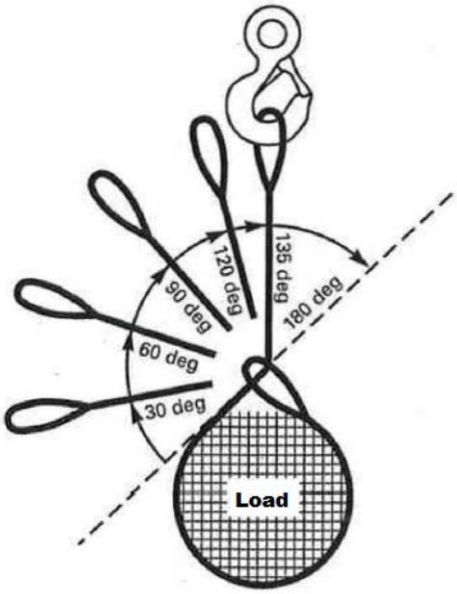

Figure 9-Angle of Choke

Table 10 Angle of Choke	
Angle of Choke, deg.	**Rated Capacity**
Over 120	100
90 – 120	87
60 – 89	74
30 – 59	62
0 – 29	49

Note: Percent of sling rated capacity in a chocker hitch.

(8) **Use of wire rope slings.**

(a) You must hitch the slings in a way that provides control of the load.

(b) You must shorten or adjust slings using only the methods approved by the manufacturer or qualified person.

(i) You must **not** shorten or lengthen by knotting, twisting, or by wire rope clips.

(c) You must keep all parts of the human body from between the sling and the load, crane, or hoist hook.

(d) You must prohibit all of the following:

(i) Intentional shock loading;

(ii) Avoid twisting and kinking.

(e) You must decrease the rated load of the sling when D/*d* ratios (Figure 8) smaller than 25 to one. Consult the sling manufacturer for specific data or refer to the *Wire Rope Sling User's Manual* (wire rope technical board).

(f) You must follow Table 11, Use of Wire Rope Slings or Clips, when using any of the identified wire rope slings or clips.

(g) Slings in contact with edges, corners, or protrusions must be protected with a material of sufficient strength, thickness, and construction to prevent damage to the sling. See Figure 3.

Table 11 Use of Wire Rope Slings or Clips	
If you are using:	**Then:**
Single leg slings used with multiple-leg slings.	Make sure the rating shown is not exceeded in any leg of the multiple-leg sling.
Hand tucked slings are used in a single leg vertical lift.	Do not allow the sling or load to rotate.
Slings made with wire rope clips.	Must not be used as a choker hitch
U-bolt wire rope clips.	Use only U-bolt wire rope clips that are made of drop-forged steel.
	Follow Table 15 for the number and spacing of the clips.
	Apply the U-bolt so the "U" section is in contact with the dead end of the rope (*See Figure 21, Installation and Loading*).

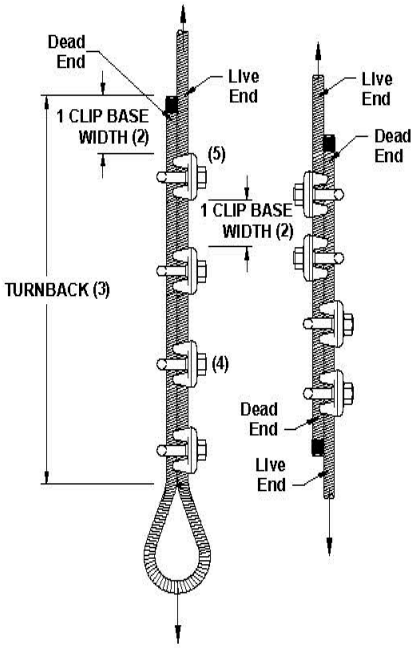

Figure 10-Installation and Loading-Proper Installation Requires:

- Correct number of clips for wire rope size
- Correct spacing of clips
- Correct turnback length
- Correct torque on nuts
- Correct orientation of saddle on live end

[Statutory Authority: RCW 49.17.010, .040, .050, and .060. 16-09-085 (Order 15-08), § 296-155-33805, filed 04/19/16, effective 05/20/16. Statutory Authority: RCW 49.17.010, .040, .050, and .060. 13-02-068 (Order 12-14), § 296-155-33805, filed 12/31/12, effective 02/01/13].

WAC 296-155-33810 Metal mesh slings.

(1) **Identification information on metal mesh slings**. You must make sure all slings have legible identification information permanently attached to the sling which includes all of the following information:

(a) Name or trademark of the manufacturer;

(b) Rated loads for the types of hitches used, and the angle they're based on;

(c) Width and gauge;

(d) Number of legs, if more than one;

(e) Individual sling identification (e.g., serial numbers);

(f) Repairing agency, if the sling has ever been repaired.

(2) **Inspection.**

(a) A qualified person must inspect metal mesh slings before their initial use, according to Table 12, both:

(i) When the sling is new; and

(ii) Whenever a repair, alteration, or modification has been done.

(b) A qualified person must perform a visual inspection for damage, each day or shift the metal mesh sling is used. Immediately remove from service any sling damaged beyond the criteria in Table 12.

(c) A qualified person must perform periodic inspections on metal mesh slings according to Table 12.

(i) Inspect the entire length, including splices, end attachments, and fittings.

(ii) Remove slings from use if any of the conditions in Table 12 are found.

(iii) Keep a record of the most recent periodic inspection available, including the condition of the sling.

Note: An external code mark on the sling is an acceptable means of recording the inspection as long as the code can be traced back to a record.

Table 12 Metal Mesh Sling Inspection Table	
Inspect metal mesh slings for conditions such as the following:	**Perform inspections:**
• Missing or illegible sling identification; • Broken welds along the sling edge; • Broken brazed joints along the sling edge; • Broken wire in any part of the mesh; • Reduction in wire diameter of: ▪ 25% due to abrasion; ▪ 15% due to corrosion; • Lack of flexibility due to the distortion of the mesh; • Distortion of the choker fitting so the depth of the slot is increased by more than 10%; • Distortion of either end fitting so the width of the eye opening is decreased by more than 10%; • A 15% reduction of the original cross-sectional area of any point around the hook opening of the end fitting; • Visible distortion of either end fitting out of its plane; • Cracked end fitting; • Slings in which the spirals are locked or without free articulation; • Fittings that are pitted, corroded, cracked, bent, twisted, gouged, or broken; • Other visible damage that raises doubt about the safety of the sling.	• At least once a year for slings in normal service; • At least once a quarter for slings in severe service; • As recommended by a qualified person for slings in special service.

(3) **Repair, alteration, or modifications**. You must repair metal mesh slings as follows:

(a) You must make sure slings are only repaired by the manufacturer or a qualified person;

(b) Straightening of spiral or cross rods, or forcing a spiral into position is prohibited (see Figure 11);

(c) You must mark the sling to show the repairing agency;

(d) You must replace cracked, broken, bent or damaged metal mesh or components instead of repairing them;

(e) You must proof load test repaired slings according to subsection (4) of this section.

(4) **Proof load testing.**

(a) You must make sure the sling manufacturer or a qualified person proof load tests all new and repaired metal mesh slings before initial use;

(b) You must use a proof load test that is a minimum of two times the vertical hitch rated load.

(5) **Rated load.**

Note: Rated loads are based on the following factors:

- *Strength of sling material;*
- *Design factor;*
- *Type of hitch;*
- *Angle of loading.*

(a) You must use metal mesh slings within the rated loads shown in Table 7 in ASME B30.9-2010. For angles that are not shown in these tables, use either the rated load for the next lower angle or one calculated by a qualified person.

(b) You must rate slings with the load capacity of the lowest rated component of the sling. For example, if fittings are rated lower than the sling material itself, identify the sling with the lower rated capacity.

(c) The use of horizontal sling angles less than 30 degrees is prohibited, unless recommended by the sling manufacturer or a qualified person.

(d) Rated loads for slings used in a choker hitch must conform to the values shown in the above referenced table, provided that the angle of choke is 120 degrees or greater.

(e) You must have the manufacturer or a qualified person determine the rated load if the angle of choke in a choker hitch is less than 120 degrees.

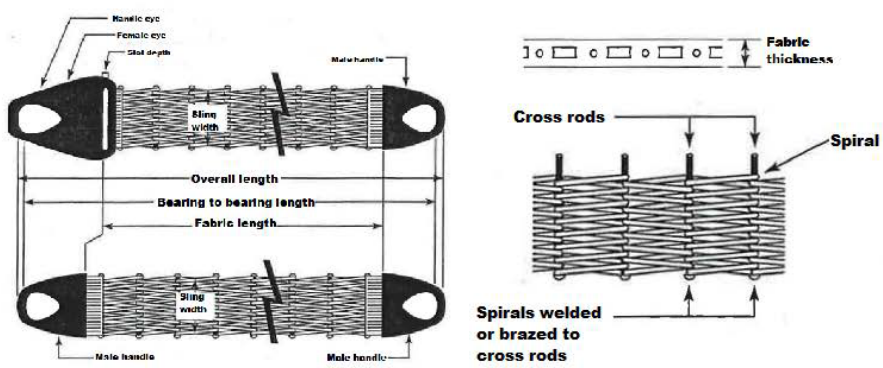

Figure 11-Metal Mesh Sling

(6) **Use of metal mesh slings.**

(a) You must use metal mesh slings safely by doing all of the following:

(i) Shorten or adjust slings using only the methods approved by the manufacturer or a qualified person;

(ii) Sling legs must not be kinked;

(iii) Hitch slings in a way that provides control of the load.

(b) You must keep all parts of the human body from between the sling and the load, crane, or hoist hook.

(c) You must prohibit the following:

(i) The use of metal mesh slings as bridles on suspended personnel platforms;

(ii) Intentional shock loading;

(iii) Straightening a spiral or cross rod or forcing a spiral into position;

(iv) Avoid twisting and kinking.

Note: Slings in contact with edges, corners, or protrusions should be protected with a material of sufficient strength, thickness, and construction to prevent damage. See Figure 3.

[Statutory Authority: RCW 49.17.010, .040, .050, and .060. 16-09-085 (Order 15-08), § 296-155-33810, filed 04/19/16, effective 05/20/16. Statutory Authority: RCW 49.17.010, .040, .050, and .060. 13-02-068 (Order 12-14), § 296-155-33810, filed 12/31/12, effective 02/01/13].

WAC 296-155-33815 Synthetic rope slings.

(1) **Identification**. You must verify all slings have legible identification information attached to the sling which includes the following information:

(a) Name or trademark of the manufacturer;

(b) Manufacturer's code or stock number;

(c) Type of fiber material;

(d) Rated loads for the types of hitches used, and the angle that the load is based on;

(e) Number of legs, if more than one;

(f) Repairing agency, if the sling has ever been repaired.

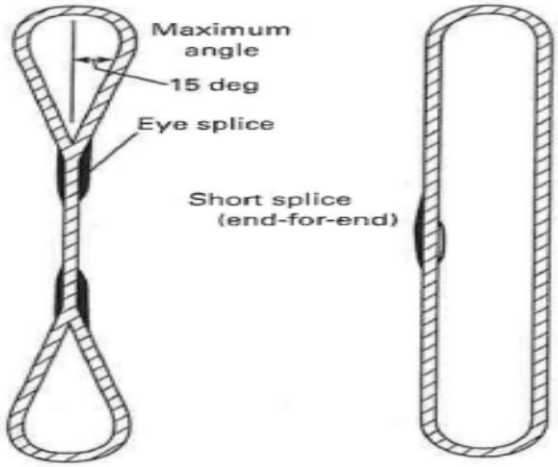

Figure 12-Synthetic Fiber Rope Slings

(2) **Inspection.**

(a) A qualified person must inspect synthetic fiber rope slings before their initial use, according to Table 13, both:

(i) When the sling is new; and

(ii) Whenever a repair, alteration, or modification has been done.

(b) A qualified person must perform a visual inspection for damage, each day or shift the synthetic fiber rope sling is used. Immediately remove any sling from service that is damaged beyond the criteria listed in Table 13.

(c) A qualified person must perform periodic inspections on synthetic fiber rope slings, according to Table 13.

(i) Examine each sling and component individually, taking care to expose and examine all surfaces.

(ii) Inspect the entire length including splices, end attachments, and fittings.

(iii) Remove slings from use if any of the conditions in Table 13 are found.

(iv) Keep a record of the most recent periodic inspection available, including the condition of the sling.

Note:	*An external code mark on the sling is an acceptable means of recording the inspection as long as the code can be traced back to a record.*

Table 13 Synthetic Rope Sling Inspection and Removal Criteria	
Inspect synthetic rope slings for the following conditions:	**Perform inspections:**
• Missing or illegible sling identification; • Cuts, gouges, or areas of extensive fiber breakage along the length • Abraded areas on the rope; • Damage that is estimated to have reduced the effective diameter of the rope by more than 10%; • Uniform fiber breakage along the major part of the length of the rope in the sling such that the entire rope appears covered with fuzz or whiskers; • Inside the rope, fiber breakage, fused or melted fiber (observed by prying or twisting to open the strands) involving damage estimated at 10% of the fiber in any strand or the rope as a whole; • Discoloration, brittle fibers, and hard or stiff areas that may indicate chemical, ultraviolet or heat damage; • Dirt and grit in the interior of the rope structure that is deemed excessive; • Foreign matter that has permeated the rope, making it difficult to handle and attracting and holding grit; • Kinks or distortion in the rope structure, particularly if caused by forcibly pulling on loops (known as hockles); • Melted, hard, or charred areas that affect more than 10% of the diameter of the rope or affect several adjacent strands along the length that affect more than 10% of strand diameters;	• At least once a year for slings in normal service; • At least once a quarter for slings in severe service; • As recommended by a qualified person for slings in special service.

• Poor condition of thimbles or other components manifested by corrosion, cracks, distortion, sharp edges, or localized wear; • Hooks that have any of the following conditions: – Any visibly apparent bend or twist from the plane of the unbent hook; – Any distortion causing an increase in throat opening 5%, not to exceed 1/4 inch, or as recommended by the manufacturer; – Wear exceeding 10%, of the original section dimension of the hook or its load pin, or as recommended by the manufacturer; – Self-locking mechanism that does not lock. • Other visible damage that raises doubt about the safety of the sling.	

(3) **Repair, alteration, or modifications**. You must meet the following requirements when repairing synthetic rope slings:

(a) Synthetic rope slings must only be repaired by the manufacturer or a qualified person;

(b) You must mark the sling to show the repairing agency;

(c) You must use components that meet the requirements of this part for sling repair;

(d) You must not repair slings by knotting or resplicing existing sling ropes;

(e) You must proof load test repaired slings according to the requirements in subsection (4) of this section.

(4) **Proof load test**. The sling manufacturer or a qualified person must proof load test repaired slings and slings incorporating previously used or welded fittings before initial use, according to Table 14:

Table 14 Synthetic Rope Sling Proof Load Requirements	
Type of equipment:	**Proof load test:**
Single leg slings; Multiple leg slings; Endless slings; Fittings attached to single legs.	To a minimum of two times the single leg vertical hitch rated load.
Master links for two-leg bridle slings.	To a minimum of 4 times the single leg vertical hitch rated load.
Master links for 3-leg bridle slings.	To a minimum of 6 times the single leg vertical hitch rated load.
Master links for 4-leg bridle slings.	To a minimum of 8 times the single leg vertical hitch rated load.

(5) **Rated load.**

Note: Rated loads are based on the following factors:

- *Strength of the sling material;*
- *Design factor;*
- *Type of hitch (see Figure 13, Hitch Types for Synthetic Rope Slings);*
- *Angle of loading (see Figure 7, Angle of Loading);*
- *Diameter of curvature over which the sling is used (see Figure 8, D/d Ratio).*

(a) You must use synthetic rope slings within the rated loads shown in Tables 18 and 19 in ASME B30.9-2010. For angles that are not shown in these tables, either use the rated load for the next lower angle or one calculated by a qualified person.

(b) You must rate slings with the load capacity of the lowest rated component of the sling. For example, if you use fittings that are rated lower than the sling material itself, identify the sling with the lower-rated capacity.

(c) The use of horizontal sling angles less than 30 degrees is prohibited, unless recommended by the sling manufacturer or a qualified person. (See Figure 7.)

(d) Rated loads for slings used in a choker hitch must conform to the values shown in the above referenced tables, provided that the angle of choke is 120 degrees or greater.

(e) You must use Figure 9, the manufacturer, or a qualified person to determine the rated load if the angle of choke in a choker hitch is less than 120 degrees.

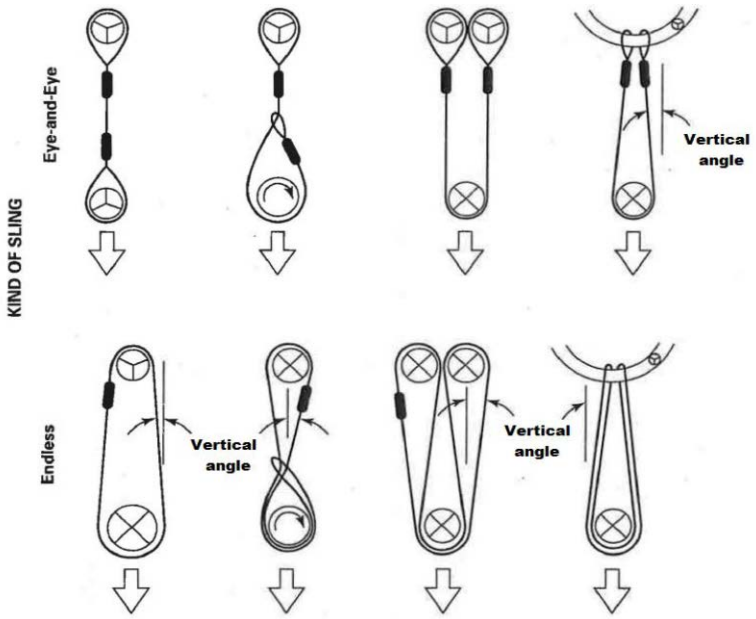

Figure 13-Hitch Types for Synthetic Rope

The symbols below represent load or support in contact with the rope sling. The contact surface diameter divided by the rope diameter is designated D/*d* ratio as described in Figure 8.

Represents a contact surface which must have a diameter of curvature at least double the diameter of the rope from which the sling is made.

Represents a contact surface which must have a diameter of curvature at least eight times the diameter of the rope.

Represents a load in choker hitch and illustrates the rotary force on the load and/or the slippage of the rope in contact with the load. Diameter of curvature of load surface must be at least double the diameter of the rope.

Note	*Legs 5 degrees or less from vertical may be considered vertical. For slings more than five degrees vertical, the actual angle must be used.*

(6) **Use of synthetic ropes.**

(a) You must use synthetic rope slings safely by doing all of the following:

(i) You must shorten or adjust slings only with methods approved by the manufacturer or qualified person;

(ii) You must not shorten or lengthen slings by knotting or twisting;

(iii) You must hitch slings in a way that provides control of the load;

(iv) Slings in contact with edges, corners, protrusions, or abrasive surfaces must be protected with a material of sufficient strength, thickness, and construction to prevent damage, see Figure 3;

(v) You must not allow the sling or load to rotate when hand -tucked slings are used in a single leg vertical lift application; and

(vi) You must keep all parts of the human body from between the sling and the load, crane, or hoist hook.

(b) All of the following is prohibited:

(i) Intentional shock loading; and

(ii) Twisting or kinking.

[Statutory Authority: RCW 49.17.010, .040, .050, and .060. 16-09-085 (Order 15-08), § 296-155-33815, filed 04/19/16, effective 05/20/16. Statutory Authority: RCW 49.17.010, .040, .050, and .060. 13-02-068 (Order 12-14), § 296-155-33815, filed 12/31/12, effective 02/01/13].

WAC 296-155-33820 Synthetic webbing slings.

(1) **Identification**. You must make sure all slings have legible identification information permanently attached to the sling which includes the following information:

(a) Name or trademark of the manufacturer;

(b) Manufacturer's code or stock number;

(c) Rated loads for the types of hitches used, and the angle that the load is based on;

(d) Type of synthetic web material;

(e) Number of legs, if more than one;

(f) Repairing agency, if the sling is ever repaired.

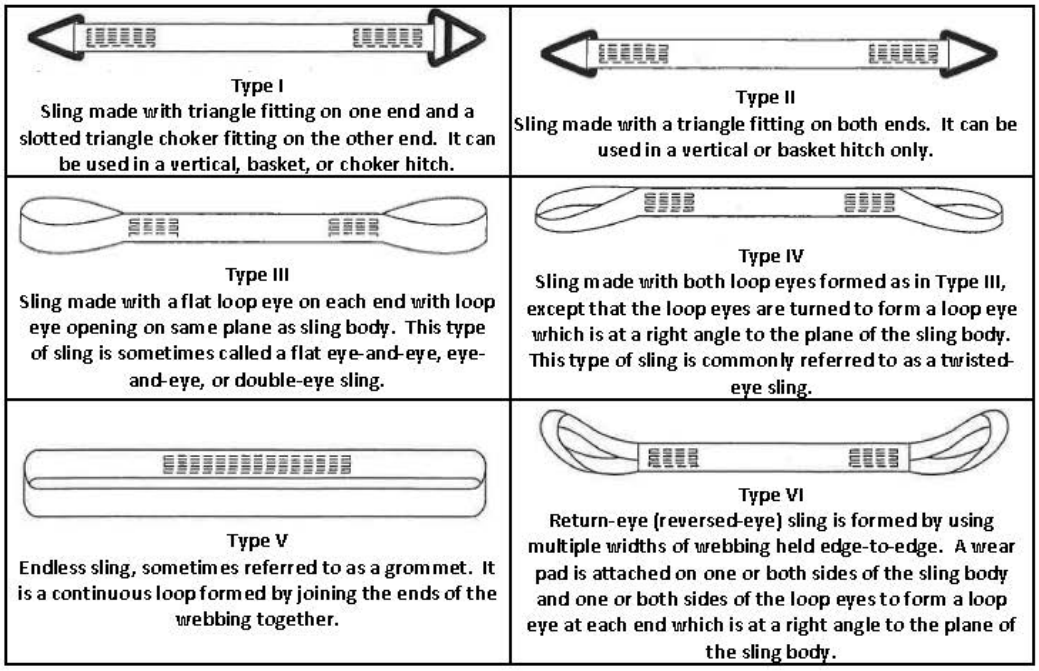

Figure 14-Synthetic Webbing Slings

(2) **Inspection.**

(a) A qualified person must inspect synthetic webbing slings before their initial use, according to Table 14:

(i) When the sling is new; and

(ii) Whenever a repair, alteration, or modification has been done.

(b) A qualified person must perform a visual inspection for damage, each day or shift the synthetic webbing sling is used. Immediately remove from service any sling that is damaged beyond the criteria listed in Table 15.

(c) A qualified person must perform periodic inspections on synthetic webbing slings, according to Table 15.

(i) You must examine each sling and component individually, taking care to expose and examine all surfaces.

(ii) You must remove slings from use if any of the conditions in Table 15 are found.

(iii) You must keep a written record of the most recent periodic inspection available, including the condition of the sling.

Note: An external code mark on the sling is an acceptable means of recording the inspection as long as the code can be traced back to a record.

Table 15 Synthetic Webbing Sling Inspection	
Inspect synthetic webbing slings for the following conditions:	**Perform inspections:**
• Missing or illegible sling identification • Acid or caustic burns • Melting or charring on any part of the sling • Holes, tears, cuts or snags • Broken or worn stitching in load bearing splices. • Excessive abrasive wear • Knots in any part of the sling • Discoloration, brittle fibers, and hard or stiff areas that may indicate chemical or ultraviolet/sunlight damage. • Fittings that are pitted, corroded, cracked, bent, twisted, gouged or broken • Hooks that have any of the following conditions: – Any visibly apparent bend or twist from the plane of the unbent hook – Any distortion causing an increase in throat opening 5%, not to exceed 1/4 inch, or as recommended by the manufacturer – Wear exceeding 10%, of the original section dimension of the hook or its load pin, or as recommended by the manufacturer – Self-locking mechanism that does not lock. • Other visible damage that causes doubt about the safety of continued use of the sling	• At least once a year for slings in normal service • At least once a quarter for slings in severe service • As recommended by a qualified person for slings in special service

(3) **Repair, alterations, or modifications.**

(a) You must meet the following requirements when repairing synthetic webbing slings:

(i) Slings are only to be repaired by the manufacturer or a qualified person;

(ii) Temporary repairs are prohibited;

(iii) You must mark the sling to show the repairing agency;

(iv) Components used for sling repair must meet the requirements of this part;

(v) You must not repair cracked, broken, melted, or otherwise damaged webbing material or fittings other than hooks must not be repaired;

(vi) You must not repair load bearing splices;

(b) You must proof load test repaired slings according to the requirements in subsection (4) of this section.

(4) **Proof load test**. The sling manufacturer or a qualified person must proof load test repaired slings and slings that have been altered or modified before initial use according to Table 16:

Table 16 Synthetic Webbing Sling Proof Test Requirements

Type of equipment:	Proof load test:
• Single leg slings • Multiple leg slings • Endless slings, • Fittings attached to single legs	To a minimum of two times the single leg vertical hitch rated load.
Master links for two-leg bridle slings	To a minimum of 4 times the single leg vertical hitch rated load.
Master links for 3-leg bridle slings	To a minimum of 6 times the single leg vertical hitch rated load.
Master links for 4-leg bridle slings	To a minimum of 8 times the single leg vertical hitch rated load.

(5) **Rated loads.**

Note: Rated loads are based on the following factors:

- *Strength of the material;*
- *Design factor;*
- *Type of hitch;*
- *Angle of loading (see Figure 7, Angle of Loading);*
- *Fabrication efficiency;*
- *Diameter of curvature over which the sling is used.*

(a) You must use synthetic web slings within the rated loads shown in Tables 20 through 24 in ASME B30.9-2010. For angles that are not shown in these tables, use either the rated load for the next lower angle or one calculated by a qualified person.

(b) You must rate slings with the load capacity of the lowest rated component of the sling. For example, if you use fittings that are rated lower than the sling material itself, identify the sling with the lower-rated capacity.

(c) The use of horizontal sling angles less than 30 manufacturer or a qualified person. (See Figure 7.)

(d) You must use Figure 9, Angle of Choke, the manufacturer, or a qualified person to determine the rated load if the angle of choke in a choker hitch is less than 120 degrees.

(e) Rated loads for slings used in a choker hitch must conform to the values shown in the above referenced tables, provided that the angle of choke is 120 degrees or greater. (See Figure 9.)

(6) **Use of synthetic webbing slings.**

(a) You must use synthetic webbing slings safely by meeting all of the following requirements:

(i) You must shorten or adjust slings only with methods approved by the manufacturer or qualified person;

(ii) You must not shorten or lengthen slings must not be shortened or lengthened by knotting or twisting;

(iii) You must hitch slings in a way that provides control of the load;

(iv) You must protect slings with material of sufficient strength, thickness, and construction to prevent damage from sharp edges, corners, protrusions, or abrasive surfaces. See Figure 3;

(v) You must keep all parts of the human body from between the sling and the load, crane, or hoist hook.

(b) Intentional shock loading is prohibited.

[Statutory Authority: RCW 49.17.010, .040, .050, and .060. 16-09-085 (Order 15-08), § 296-155-33820, filed 04/19/16, effective 05/20/16. Statutory Authority: RCW 49.17.010, .040, .050, and .060. 13-02-068 (Order 12-14), § 296-155-33820, filed 12/31/12, effective 02/01/13].

WAC 296-155-33825 Synthetic roundslings.

(1) **Identification**. All synthetic roundslings must be marked with the following information:

(a) Name or trademark of the manufacturer;

(b) Manufacturer's code or stock number;

(c) Core material;

(d) Cover material if different from core material;

(e) Rated loads for the types of hitches used, and the angle that the load is based on;

(f) Number of legs, if more than one;

(g) Repairing agency, if the sling is ever repaired.

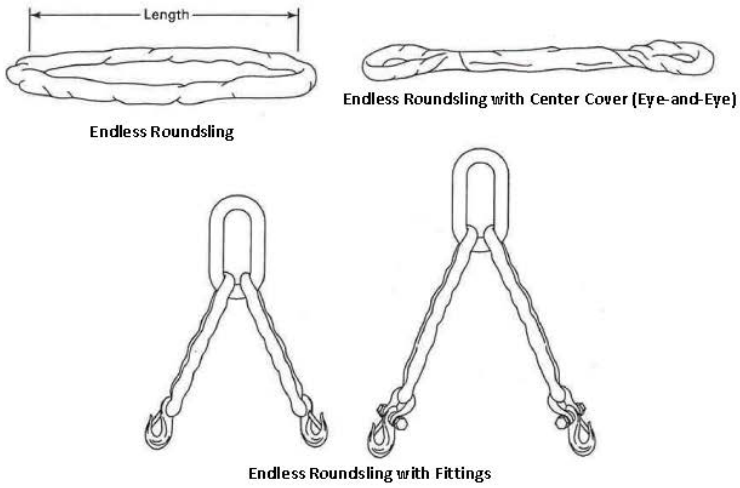

Figure 15-Synthetic Round Slings

(2) **Inspection.**

(a) A qualified person must inspect synthetic roundslings before their initial use, according to Table 17, both:

(i) When the sling is new; and

(ii) Whenever a repair, alteration, or modification has been done.

(b) A qualified person must perform a visual inspection for damage, each day or shift the synthetic roundsling is used. Immediately remove from service any sling that is damaged beyond the criteria listed in Table 17.

(c) A qualified person must perform periodic inspections on synthetic roundslings, according to Table 17.

(i) You must examine each sling and component individually, taking care to expose and examine all surfaces.

(ii) You must remove slings from use if any of the conditions in Table 17 are found.

(iii) You must keep a written record of the most recent periodic inspection available, including the condition of the sling.

Note:	*An external code mark on the sling is an acceptable means of recording the inspection as long as the code can be traced back to a record.*

Table 17 Synthetic Roundsling Inspection and Removal Criteria	
Inspect synthetic roundslings for conditions such as the following:	**Perform inspections**:
• Missing or illegible sling identification. • Acid or caustic burns. • Evidence of heat damage. • Holes, tears, cuts, abrasive wear or snags that expose the core yarns. • Broken or damaged core yarns. • Weld spatter that exposes core yarns. • Roundslings that are knotted. • Fittings that are pitted, corroded, cracked, bent, twisted, gouged or broken. • Hooks that have any of the following conditions: – Any visibly apparent bend or twist from the plane of the unbent hook. – Any distortion causing an increase in throat opening 5%, not to exceed one-quarter inch, or as recommended by the manufacturer. – Wear exceeding 10%, of the original section dimension of the hook or its load pin, or as recommended by the manufacturer. – Self-locking mechanism that does not lock. • Other visible damage that causes doubt about the safety of continued use of the sling.	• At least once a year for slings in normal service. • At least once a quarter for slings in severe service. • As recommended by a qualified person for slings in special service.

(3) **Repair, alterations, or modifications.**

(a) You must meet the following requirements when repairing synthetic roundslings:

(i) Only the manufacturer or a qualified person can repair slings;

(ii) You must mark the sling to show the repairing agency;

(iii) You must only use components that meet the requirements of this rule to repair slings;

(iv) You must replace cracked, broken, or bent fittings other than hooks; do not repair them.

(b) Both of the following are prohibited:

(i) Temporary repairs of roundslings or fittings; and

(ii) The repair of load bearing yarns.

(c) You must proof load test repaired slings according to the requirements in subsection (4) of this section.

(4) **Proof load tests.** The sling manufacturer or a qualified person must proof load test repaired slings and slings that have been altered or modified before initial use, according to Table 18:

Table 18 Synthetic Roundslings Proof Test Requirements	
Type of equipment:	**Proof load test:**
• Single leg slings • Multiple leg slings • Endless slings • Fittings attached to single legs	To a minimum of two times the single leg vertical hitch rated load.
Master links for two-leg bridle slings	To a minimum of 4 times the single leg vertical hitch rated load.
Master links for 3-leg bridle slings	To a minimum of 6 times the single leg vertical hitch rated load.
Master links for 4-leg bridle slings	To a minimum of 8 times the single leg vertical hitch rated load.

(5) **Rated loads.**

Note: Rated loads are based on the following factors:

- *Strength of the material.*
- *Design factor.*
- *Type of hitch.*
- *Angle of loading. (See Figure 7, Angle of Loading.)*
- *Diameter of curvature over which the sling is used.*

(a) You must use synthetic roundslings within the rated loads shown in Table 25 in ASME B30.9-2010. For angles that are not shown in these tables, either use the rated load for the next lower angle or one calculated by a qualified person.

(b) You must rate slings with the load capacity of the lowest rated component of the sling. For example, if you use fittings that are rated lower than the sling material itself, identify the sling with the lower rated capacity.

(c) You must prohibit the use of horizontal sling angles less than 30 degrees unless recommended by the sling manufacturer or a qualified person.

(d) You must use Figure 7, Angle of Choke, the manufacturer, or a qualified person to determine the rated load if the angle of choke in a choker hitch is less than 120 degrees.

(e) Rated loads for slings used in a choker hitch must conform to the values shown in the above referenced Table 10 provided that the angle of choke is 120 degrees or greater. (See Figure 7.)

(6) **Use of synthetic roundslings.**

(a) You must use methods approved by the manufacturer or qualified person to shorten or adjust slings. Slings must not be shortened or lengthened by knotting or twisting.

(b) You must hitch slings in a way that provides control of the load.

(c) You must protect slings with material of sufficient strength, thickness, and construction to prevent damage from sharp edges, corners, protrusions, or abrasive surfaces. (See Figure 3.)

(d) You must keep all parts of the human body from between the sling and the load, crane, or hoist hook.

(e) Intentional shock loading is prohibited.

{Statutory Authority: RCW 49.17.010, .040, .050, and .060. 16-09-085 (Order 15-08), § 296-155-33825, filed 04/19/16, effective 05/20/16. Statutory Authority: RCW 49.17.010, .040, .050, and .060. 13-02-068 (Order 12-14), § 296-155-33825, filed 12/31/12, effective 02/01/13].

WAC 296-155-339 Rigging hardware and lifting devices other than slings and rigging hardware.

[Statutory Authority: RCW 49.17.010, .040, .050, and .060. 13-02-068 (Order 12-14), § 296-155-339, filed 12/31/12, effective 02/01/13].

WAC 296-155-33900 General requirements.

(1) **Inspections.**

(a) A qualified person must perform an inspection on all hardware according to Table 19, each day before using. If a daily inspection is not feasible because the hardware is in a semipermanent or inaccessible location, a periodic inspection is allowed instead of daily.

(b) You must remove hardware from service when it shows any conditions listed in Table 19, or any other hazardous condition.

Table 19 Hardware Inspection
For all hardware, inspect for the following:
• Missing or illegible identification. • For shackles, missing or illegible manufacturer's name or trademark and/or rated load identification.
• Indications of heat damage, including weld spatter or arc strikes.
• Excessive pitting or corrosion.
• Load bearing components that are: - Bent. - Twisted. - Distorted. - Stretched. - Elongated. - Cracked. - Broken.
• Excessive nicks or gouges. For riggings blocks, excessive nicks, gouges and wear.
• 10% reduction of the original or catalog dimension at any point. For shackles, this includes at any point around the body or pin.
• Excessive thread damage or wear, where applicable.
• Evidence of unauthorized welding or modification.
• Any other conditions that cause doubt as to the safety of continued use.
• On **Shackles,** also inspect for incomplete pin engagement.
• On **swivels and swivel hoist rings**, check for lack of ability to freely rotate or pivot.
• On **Compression hardware**, also check for: - Unauthorized replacement components. - Insufficient number of wire rope clips. - Improperly tightened wire rope clips. - Damaged wire rope. - Indications of wire rope slippage. - Improper assembly.
• On **Swivels,** check for loose or missing nuts, bolts, cotter pins, snap rings, or other fasteners and retaining devices.
• On **Blocks** check for: - Loose or missing nuts, bolts, cotter pins, snap rings, or other fasteners and retaining devices. - Misalignment or wobble in sheaves. - Excessive sheave groove corrugation or wear.

(2) **Repairs, alterations, or modifications.**

(a) You must repair rigging hardware altered or modified according to the hardware manufacturer or a qualified person.

(b) Welding of hardware is prohibited unless authorized by the manufacturer.

(c) Replacement parts must meet or exceed the original rigging hardware manufacturer's specifications.

(3) **Hardware use.**

(a) You must select hardware with the characteristics suitable for the application and environment where it will be used.

(b) You must not exceed the rated load of the hardware.

(c) At least one of the workers using rigging hardware must meet the requirements of WAC 296-155-33700.

[Statutory Authority: RCW 49.17.010, .040, .050, and .060. 16-09-085 (Order 15-08), § 296-155-33900, filed 04/19/16, effective 05/20/16. Statutory Authority: RCW 49.17.010, .040, .050, and .060. 13-02-068 (Order 12-14), § 296-155-33900, filed 12/31/12, effective 02/01/13].

WAC 296-155-33905 Shackles.

(1) Pins must be connected to the choking eye of the sling when a shackle is used in a choker hitch.

(2) **Screw pins must be:**

(a) Fully engaged, with the shoulder in contact with the shackle body (see Figure 16, Typical Shackle Components).

(b) Rigged in a way that keeps the pin from unscrewing while in use.

(c) Secured from rotation or loosening if used for long-term installations.

(3) Cotter pins must be kept in good working condition.

(4) If the shackle is side loaded, you must reduce the rated load, according to the recommendations of the manufacturer or a qualified person (see Figure 17, Side Loading).

Note: See Figure 18, Shackle Types, for examples of types of shackles covered by this rule.

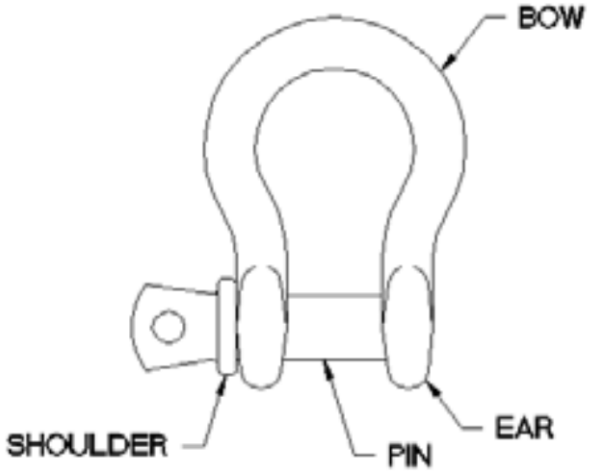

Figure 16-Typical Shackle Components

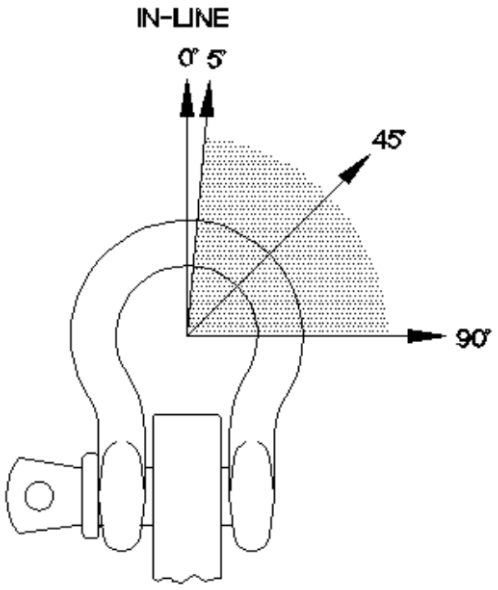

Figure 17-Side Loading

Side Loading Angle, deg.	% Rated Load Reduction
In-line (0) to 5	None
6 to 45	30%
46 to 90	50%
Over 90	Not permitted unless authorized by manufacturer or qualified person

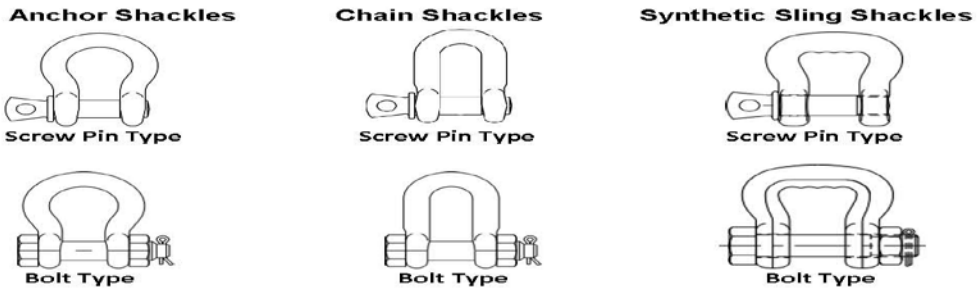

Figure 18-Shackle Types

[Statutory Authority: RCW 49.17.010, .040, .050, and .060. 16-09-085 (Order 15-08), § 296-155-33905, filed 04/19/16, effective 05/20/16. Statutory Authority: RCW 49.17.010, .040, .050, and .060. 13-02-068 (Order 12-14), § 296-155-33905, filed 12/31/12, effective 02/01/13].

WAC 296-155-33910 Adjustable hardware.

(1) **Turnbuckles**. You must follow these rigging practices for turnbuckles:

(a) Locking nuts, if used, must be compatible with the threads of the turnbuckle end. (See Figure 19, Turnbuckle Types.)

(b) For long-term installations, you must secure turnbuckles in a way that prevents unscrewing.

(c) Turnbuckle end fitting threads must be fully engaged in the body threads.

(d) Components, including pins, bolts, nuts, or cotter pins used with jaw ends, must be in good working condition prior to use.

Notes:

- *See Figure 19 for types of turnbuckles covered by this rule.*
- *Pipe bodies conceal the length of thread engagement. Verify full engagement before loading. (See Figure 19.)*

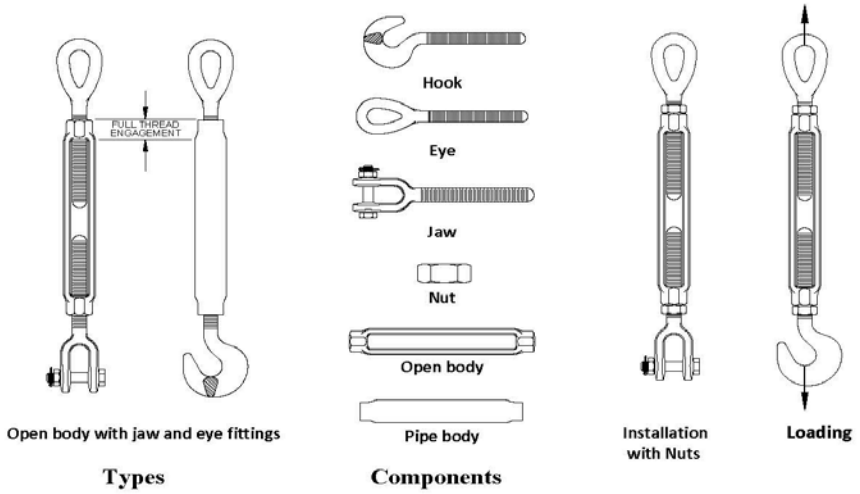

Figure 19-Turnbuckle Types

(2) **Eyebolts**. You must follow these rigging practices for eyebolts:

(a) Eyebolts not shouldered to the load must only be used for in-line loads. (See Figure 20, Eyebolts.)

(b) You must only use shoulder eyebolts for angular lifting.

(i) The shoulder must be flush and securely tightened against the load.

(ii) You must reduce the working load limit (WLL) as shown in Figure 31.

(iii) For angular lifts, the plane of the eye must be aligned with the direction of loading. If needed, flat washers can be used under the shoulder to position the plane of the eye. (See Figure 20.)

(c) When using eyebolts in a tapped blind hole, the effective thread length must be at least one and 1/2 times the diameter of the bolt for engagement in steel. (See Figure 20.) For other engagements, or engagements in other materials, contact the eyebolt manufacturer or a qualified person.

(d) When using eyebolts in a tapped through-hole of less than one diameter thickness, a nut must be used under the load, and must be fully engaged and tightened securely against the load. (See Figure 20.)

(e) When eyebolts are used in an untapped through-hole, the nut under the load must be fully engaged. If the eyebolt is not shouldered to the load, a second nut on top of the load should be used if possible. (See Figure 20.)

Note: See Figure 20 for examples of eyebolts covered by this rule.

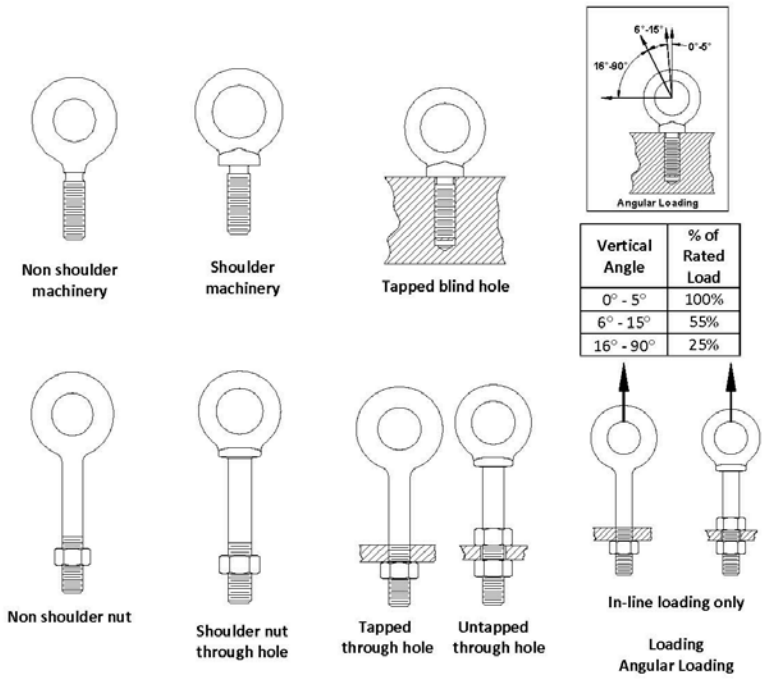

Figure 20-Eyebolts

(3) **Eye nuts**. You must follow these rigging practices for eye nuts (see Figure 21, Eye Nuts):

(a) The threads of eye nuts must be fully engaged;

(b) Eye nuts must only be used for in-line loads;

(c) Components must be in good working condition prior to use.

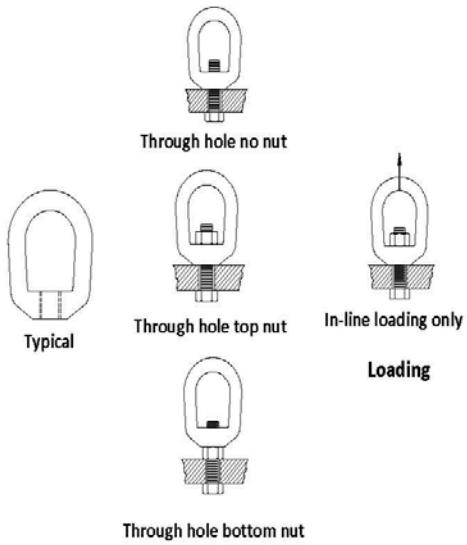

Figure 21-Eye Nuts

(4) **Swivel hoist rings**. You must follow these rigging practices for swivel hoist rings:

(a) The swivel hoist ring working load limit (WLL) must meet or exceed the anticipated angular rigging tension. (See Figure 22, Angle of Loading.)

(b) Swivel hoist rings must be tightened to the torque specifications of the manufacturer.

(c) The swivel hoist ring must be free to rotate and pivot without interference during lifting. (See Figure 23, Swivel Hoist Rings.)

(d) The load applied to the swivel hoist ring must be centered in the bail to prevent side loading.

(e) Any attached lifting component must be narrower than the inside width of the bail to avoid spreading.

(f) When using swivel hoist rings in a threaded-hole, the effective thread length must be one and 1/2 times the diameter of the bolt for steel. (See Figure 23.) For other thread engagements or engagement in other materials, contact the manufacturer or a qualified person.

(g) When using swivel hoist rings in a through-hole application, a nut and washer must be used. A washer and nut must be in accordance with the manufacturer's recommendations. The nut must be fully engaged. (See Figure 23.)

(h) The bushing flange must fully contact the load surface. (See Figure 23.)

(i) Spacers or washers must not be used between the bushing flange and the mounting surface of the load being lifted.

Note: See Figure 23 for examples of swivel hoist rings covered by this rule.

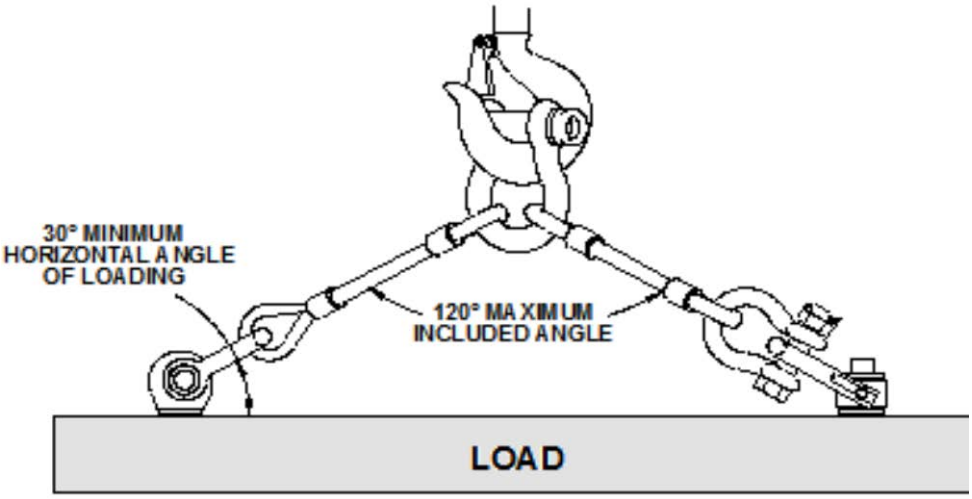

Figure 22-Angle of Loading (Adjustable Hardware)

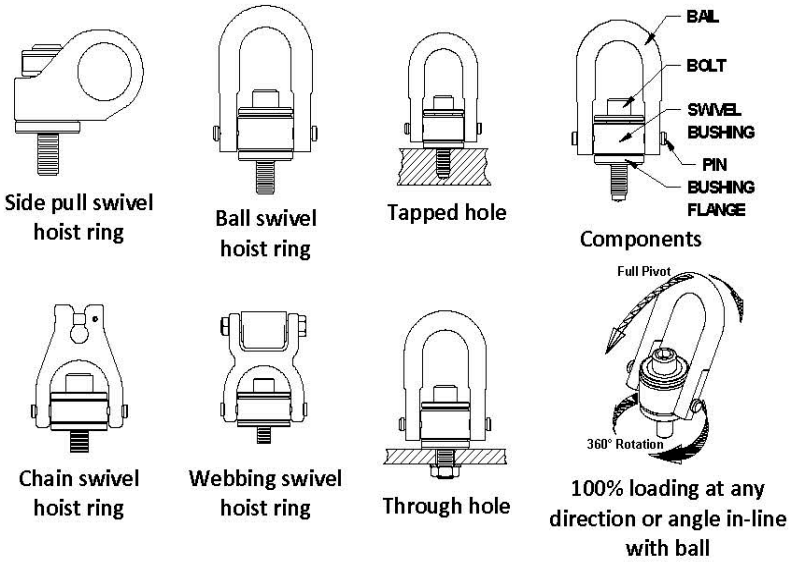

Figure 23-Swivel Hoist Rings

[Statutory Authority: RCW 49.17.010, .040, .050, and .060. 16-09-085 (Order 15-08), § 296-155-33910, filed 04/19/16, effective 05/20/16. Statutory Authority: RCW 49.17.010, .040, .050, and .060. 13-02-068 (Order 12-14), § 296-155-33910, filed 12/31/12, effective 02/01/13].

WAC 296-155-33915 Compression hardware.

(1) **Wire rope clips**. You must follow these assembly requirements for wire rope clips:

(a) Before installing a wire rope clip on plastic coated or plastic impregnated wire rope, the wire rope clip manufacturer, you must consult the wire rope manufacturer or a qualified person.

(b) For U-bolt clips used to create end terminations, you must place the saddle on the live end of the wire rope, with the U-bolt on the dead end side. (See Figure 24, Wire Rope Clips.)

(c) You must test the assembly by loading the connection to at least the expected working load. After unloading, retighten the wire rope clips to the torque recommended by the manufacturer or a qualified person.

(d) You must follow the manufacturer's recommendations for the minimum number of clips, spacing and turn-back measurements, and to the recommended torque values. In the absence of the manufacturer's recommendations follow Table 5.

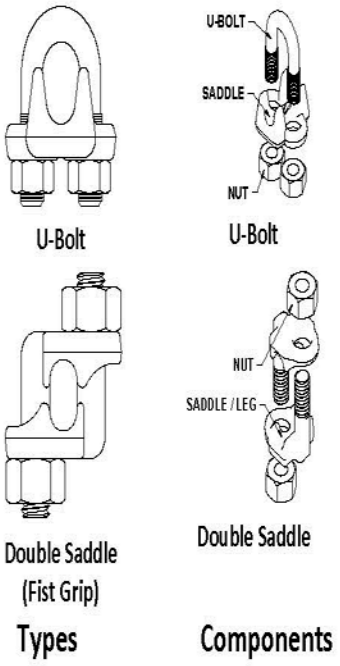

Figure 24-Wire Rope Clips

(2) **Wedge sockets**. You must follow these assembly requirements for wedge sockets:

(a) Wedge sockets must be assembled as recommended by the manufacturer or a qualified person.

(b) Before installing a wedge socket on plastic coated or plastic impregnated wire rope the wedge socket manufacturer, you must consult the wire rope manufacturer or a qualified person.

(c) The assembler must match the proper wedge with the socket for the wire rope to be installed. Wedges must not be interchanged between different manufacturers' sockets or models.

(d) The live end of the wire rope in the wedge socket cavity must be in alignment with the socket's pin. (See Figure 25, Wedge Sockets.)

(e) The length of the dead end tail of the wire rope must be as required by the manufacturer or a qualified person.

(f) The tail of the dead end of the wire rope extending beyond the wedge socket must be secured as recommended by the wedge socket manufacturer or a qualified person.

(g) The dead end of the wire rope must not be secured to the live end of the wire rope in a way that restricts the movement of the live end. (See Figure 25.)

(h) After assembly the connection must be loaded to fully seat the wedge before use.

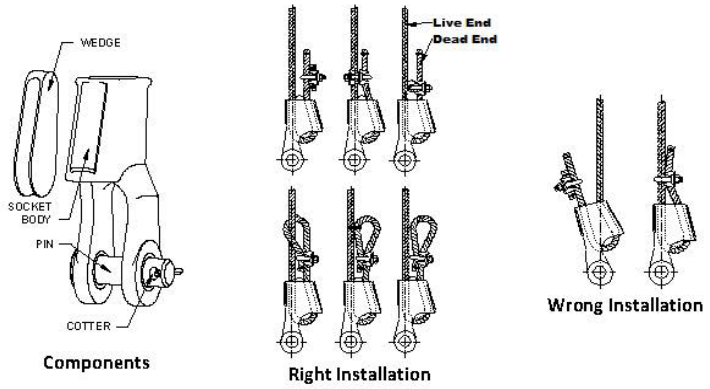

Figure 25-Wedge Sockets

[Statutory Authority: RCW 49.17.010, .040, .050, and .060. 16-09-085 (Order 15-08), § 296-155-33915, filed 04/19/16, effective 05/20/16. Statutory Authority: RCW 49.17.010, .040, .050, and .060. 13-02-068 (Order 12-14), § 296-155-33915, filed 12/31/12, effective 02/01/13].

WAC 296-155-33920 Links, rings, and swivels.

(1) You must follow these rigging practices for links and rings:

(a) The link or ring must be of the proper shape and size to make sure it seats properly in the hook or lifting device.

(b) Multiple slings or rigging hardware gathered in a link or ring must not exceed a 120 degree included angle. (See Figure 22, Angle of Loading.)

> *Note: See Figure 26, Links and Rings, for examples of links and rings covered by this rule.*

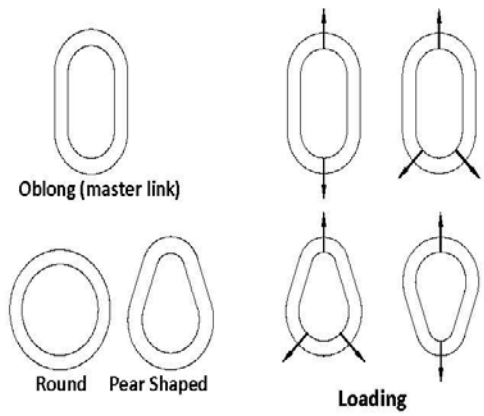

Figure 26-Links and Rings

(2) You must follow these rigging practices for swivels:

(a) You must only use swivels on in-line loads. (See Figure 27, Swivels.)

> *Note: Swivels are positioning hardware, and are not intended to be rotated under load.*

(b) Swivels must be of the proper shape and size to make sure it seats correctly in the hook or lifting device.

(c) You must keep all swivel components must be kept in good working condition.

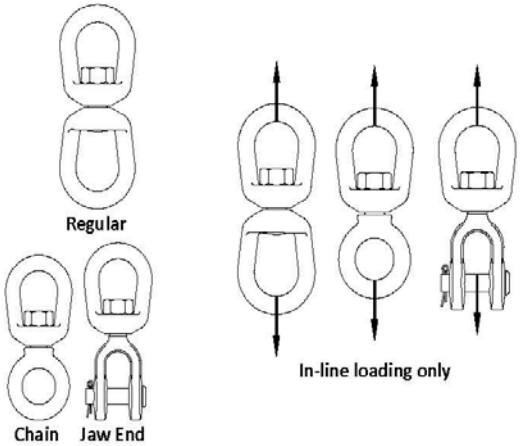

Figure 27 Swivels

[Statutory Authority: RCW 49.17.010, .040, .050, and .060. 16-09-085 (Order 15-08), § 296-155-33920, filed 04/19/16, effective 05/20/16. Statutory Authority: RCW 49.17.010, .040, .050, and .060. 13-02-068 (Order 12-14), § 296-155-33920, filed 12/31/12, effective 02/01/13].

WAC 296-155-33925 Rigging blocks.

(1) The rigging block components must be fully engaged, with all fasteners and retaining devices in place and in good working order before use.

(2) The rope must be in the sheave groove when the rigging block begins to take load.

(3) The load line multiplied by the block load factor must not exceed the rated load of the rigging block. (See Figure 28, Block Load Factor Multipliers.)

(4) Load line fittings must not contact the rigging block sheave(s).

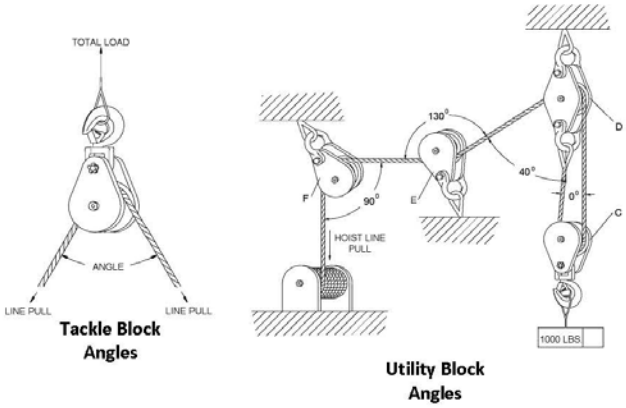

Angle	Factor	Angle	Factor
0°	2.00	100°	1.29
10°	1.99	110°	1.15
20°	1.97	120°	1.00
30°	1.93	130°	.84
40°	1.87	135°	.76
45°	1.84	140°	.68
50°	1.81	150°	.52
60°	1.73	160°	.35
70°	1.64	170°	.17
80°	1.53	180°	.00
90°	1.41	—	—

Block Load = Line Pull X Multiplier Factor

Example: Load = 1,000 lb
Line Pull: 1,000 lb ÷ 2 = 500 lb
Load Block "C" = 500 lb X 2 = 1,000 lb
(line pull X factor for 0 deg angle)
Load Block "D" = 500 lb X 1.87 + 500 lb = 1,435 lb
(line pull X factor for 40 deg angle + dead-end load
Load Block "E" = 500 lb X 0.84 = 420 lb
(line pull X factor for 130 deg angle)
Load Block "F" = 500 lb X 1.41 = 705 lb
(line pull X factor for 90 deg angle)

Figure 28-Block Load Factor Multipliers

[Statutory Authority: RCW 49.17.010, .040, .050, and .060. 16-09-085 (Order 15-08), § 296-155-33925, filed 04/19/16, effective 05/20/16. Statutory Authority: RCW 49.17.010, .040, .050, and .060. 13-02-068 (Order 12-14), § 296-155-33925, filed 12/31/12, effective 02/01/13].

WAC 296-155-340 Lifting devices other than slings and rigging hardware.

[Statutory Authority: RCW 49.17.010, .040, .050, and .060. 13-02-068 (Order 12-14), § 296-155-340, filed 12/31/12, effective 02/01/13].

WAC 296-155-34005 Structural and mechanical lifters.

(1) Structural and mechanical lifting devices must be constructed in accordance with ASME B30.20-2010, Below-the-Hook Lifting Devices.

(2) The rated load of the lifting device must be legibly marked on the main structure or on a tag attached to it where it is visible. If the lifting device is made up of several lifters, each detachable from the group, these lifters must also be marked with their individual rated loads.

(3) All structural and mechanical lifting devices must be marked with the following information:

(a) Manufacturer's name and address;

(b) Serial number;

(c) Lifter weight, if over one hundred pounds (45 kg);

(d) Rated load as required in subsection (2) of this section;

(e) Name and address of repairer or modifier, when the lifting device has been repaired or modified.

(4) **Installation.**

(a) Structural and mechanical lifters must be assembled and installed according to manufacturer's instructions.

(b) The installer must check for correct rotation of all motors.

(5) **Inspection.**

(a) A qualified person must inspect all new, altered, repaired, or modified lifting devices according to Tables 20 and 21. The inspection of altered, repaired or modified lifting devices can be limited to the parts affected, if a qualified person determines that is all that is needed.

(b) The operator must inspect the lifting device before and during every lift for any indication of damage. Check the following items:

(i) Surface of the load for debris;

(ii) Condition and operation of the controls; and

(iii) Condition and operation of the indicators and meters when installed.

(c) Lifting devices must be inspected, by the operator or another competent person, according to Table 20.

(i) If any damage is found, have a qualified person determine whether there is a hazard.

(ii) Hazardous conditions must be corrected before continuing use.

Table 20 Structural and Mechanical Lifter Frequent Inspection	
Inspect for:	**How often:**
Structural members for: • Deformation. • Cracks. • Excessive wear on any part of the lifter.	• Normal service – monthly. • Heavy service – weekly to monthly. • Severe service – daily to weekly. • Special or infrequent service – as recommended by a qualified person before and after each occurrence. • Before use, when any lifter has been idle for at least one month.
The device for: • Loose or missing: - Guards. - Fasteners. - Covers. - Stops. - Nameplates.	
• All functional operating mechanisms for maladjustments interfering with operation.	
• Automatic hold-and-release mechanisms for maladjustments interfering with operation.	

Note:

- *Normal service means service that involves operation with various weights within the rated load limit, averaging less than 65% of rated load limits.*
- *Heavy service means service that involves operation within the rated load limit, that exceeds the limits of normal service.*
- *Severe service means service that involves normal or heavy service with abnormal operating conditions.*

(d) A qualified person must perform a periodic inspection on structural and mechanical lifters according to Table 21. Include the items in Table 20 of this section.

(i) You must correct hazardous conditions before continuing use.

(ii) You must keep inspection reports of the most recent periodic inspection.

Table 21 Structural and Mechanical Lifting Device Periodic Inspection	
Inspect for:	**How often:**
Loose bolts or fasteners.	• Normal service for equipment in place – yearly. • Heavy service semiannually. • Severe service – quarterly. • Special or infrequent service – as recommended by a qualified person before the first such occurrence and as directed by the qualified person for any subsequent occurrences.
Cracked or worn gear, pulleys, sheaves, sprockets, bearings, chains, and belts.	
Excessive wear of friction pads, linkages, and other mechanical parts.	
Excessive wear at hoist hooking points and load support clevises or pins.	

Note:

- *Normal service means service that involves operation with various weights within the rated load limit, averaging less than 65% of rated load limits.*
- *Heavy service means service that involves operation within the rated load limit, that exceeds the limits of normal service.*
- *Severe service means service that involves normal or heavy service with abnormal operating conditions.*

(6) **Operational tests.**

(a) A qualified person must perform an operational test on new, altered, repaired, or modified lifters before use. The qualified person can limit the testing of altered, repaired or modified lifters to the parts affected.

(b) The following items must be tested:

(i) Lifters with moving parts must be tested to determine that the lifter operates according to the manufacturer's instructions.

(ii) Lifters with manually operated or automatic latches must be tested to determine that the latch operates according to manufacturer's instructions.

(iii) All indicator lights, gages, horns, bells, alarms, pointers, and other warning devices must be tested.

(c) Dated reports of all operational tests must be kept on file.

(7) **Repair.**

(a) You must repair structural and mechanical lifting devices as follows:

(i) Adjustments and testing must be done only by a qualified person;

(ii) Replacement parts used must be at least equal to the original manufacturer's specifications;

(iii) You must inspect the device according to subsection (5) of this section before returning to service.

(b) You must take the following precautions before repairs on a lifting device are started:

(i) You must disconnect, lock out and tag all sources of power "Out of Service," if applicable;

(ii) You must tag the lifting device removed from service for repair "Out of Service."

(8) Lifting devices must be operated only by qualified personnel.

(9) Operators must do the following:

(a) Test all controls before use, each shift;

(b) Consult a competent person before handling the load whenever there is any doubt as to safety;

(c) Respond only to instructions from competent persons, except for stop signals. The operator must obey a stop order at all times, no matter who gives it;

(d) Do not load the lifting device in excess of its rated load or with any load that it is not specifically designed for;

(e) Apply the lifter to the load according to the instruction manual;

(f) Check that:

(i) Lifter ropes or chains are not kinked.

(ii) Multiple part lines are not twisted around each other.

(g) Bring the lifter over the load in a way that minimizes swinging;

(h) Keep the load or lifter from contacting any obstruction;

(i) Set down any attached load and store the lifting device before leaving it;

(j) Check that all personnel are clear of the load;

(k) Using the lifter for side pulls or sliding the load is prohibited, unless specifically authorized by a qualified person;

(l) Riding on loads or the lifting device is prohibited.

[Statutory Authority: RCW 49.17.010, .040, .050, and .060. 16-09-085 (Order 15-08), § 296-155-34005, filed 04/19/16, effective 05/20/16. Statutory Authority: RCW 49.17.010, .040, .050, and .060. 13-02-068 (Order 12-14), § 296-155-34005, filed 12/31/12, effective 02/01/13].

WAC 296-155-34010 Vacuum lifters.

(1) Vacuum lifting devices must be constructed in accordance with ASME B30.20-2010, Below-the-Hook Lifting Devices.

(2) **Rated load.**

(a) The rated load of each lifter and each pad must be legibly marked on the main structure or on a tag attached to it where it is visible. The marking must refer to the instruction manual for information about decreases in rating due to loads:

(i) Rigidity;

(ii) Strength;

(iii) Overhang;

(iv) Surface condition;

(v) Angle of load;

(vi) Temperature;

(vii) Number of pads;

(b) Elevation and vacuum level.

(c) If the vacuum lifting device has shut-off valves on individual pads or groups of pads, the rated load of each pad must also be marked.

(3) The vacuum lifter must be clearly marked on the main structure with all of the following:

(a) Manufacturer's name and address;

(b) Model number;

(c) Serial number;

(d) Lifter weight;

(e) Electrical power requirements, if applicable;

(f) Pressure and volume of compressed air required, if applicable;

(g) Rated load, as required in subsection (2) of this section;

(h) If repaired or modified, the name, address, and lifter identification of repairer or modifier.

(4) **Installation.**

(a) Vacuum lifters must be assembled and installed according to manufacturer's instructions.

(b) The installer must check:

(i) That the power supply is the same as what is shown on the nameplate.

(ii) For correct rotation of all motors.

(c) Connect the electrical power supply to the vacuum lifter to either:

(i) The line side of the crane disconnect; or

(ii) An independent circuit.

(5) **Inspection.**

(a) A qualified person must inspect all new, altered, repaired, or modified vacuum lifters. A qualified person can limit the inspection of altered, repaired or modified lifters to the affected parts.

(b) The operator must inspect the lifter before and during every lift for any indication of damage, including all of the following:

(i) Surface of the load for debris;

(ii) Seal of the vacuum pad for debris;

(iii) Condition and operation of the controls;

(iv) Condition and operation of the indicators, meters and pumps when installed.

(c) Lifters must be inspected, by the operator or another competent person, according to Table 22.

(d) A qualified person must determine whether signs of damage indicate a hazard.

(e) You must correct hazardous conditions before continuing use.

(f) A qualified person must perform a periodic inspection of vacuum lifters according to Table 23. Include the items in Table 22 of this section.

(g) You must keep dated inspection records on all critical items such as supporting structure, motors, controls, and other auxiliary components.

(h) You must correct hazardous conditions before continuing use.

Table 22 Vacuum Lifter Frequent Inspection	
Inspect for:	**How often:**
Structural members for: • Deformation. • Cracks. • Excessive wear.	• Normal service – monthly. • Heavy service – weekly to monthly. • Severe service – daily to weekly. • Special or infrequent service – as recommended by a qualified person before and after each occurrence. • Before using, when a lifting device has been idle for more than one month.
The vacuum generator for output.	
The vacuum pad seal rings for: • Cuts. • Tears. • Excessive wear. • Foreign particles.	
Vacuum lines and connections for: • Leakage. • Cuts. • Kinks. • Collapsed areas of hoses.	
The vacuum reservoir for: • Leaks. • Visible damage.	
The entire vacuum system including indicator lights, gages, horns, bells, pointers or other warning devices, and vacuum level indicators: • Attach a nonporous, clean surface to the vacuum pad or pads. • Stop the vacuum source. • Check that the vacuum level in the system does not decrease by more than the manufacturer's specified rate.	

Table 23 Vacuum Lifting Device Periodic Inspection	
Inspect for:	**How often:**
External evidence of: • Looseness. • Wear. • Deformation. • Cracking. • Corrosion.	• Normal service for equipment in place – yearly • Heavy service – semiannually • Severe service – quarterly • Special or infrequent service – as recommended by a qualified person before the first such occurrence and as directed by the qualified person for any subsequent occurrences.
External evidence of damage to: • Supporting structure. • Motors. • Controls. • Other auxiliary components.	
Clear warning labels.	

Note:

- *Normal service means service that involves operation with various weights within the rated load limit, averaging less than 65% of rated load limits.*
- *Heavy service means service that involves operation within the rated load limit, that exceeds the limits of normal service.*
- *Severe service means service that involves normal or heavy service with abnormal operating conditions.*

(6) **Operational tests.**

(a) A qualified person must perform an operational test on new, altered, repaired, or modified vacuum lifters before use. The qualified person can limit the testing of altered, repaired or modified lifters to the parts affected.

(b) The following items must be tested:

(i) Moving parts;

(ii) Latches;

(iii) Stops;

(iv) Limit switches;

(v) Control devices;

(vi) Vacuum lines;

(vii) The seals and connections must be tested for leaks by attaching a smooth nonporous clean material to the vacuum pad or pads and then stopping the vacuum source. The vacuum level in the system must not decrease more than the manufacturer's specified rate.

(c) You must keep dated reports of all operations tests on file.

(7) **Load tests.**

(a) Prior to initial use, all new, altered, repaired, or modified vacuum lifting devices must be load tested and inspected by a qualified person. The qualified person can limit the test to the areas affected by the alteration, repair or modification.

(b) Test loads must not be more than 125% of the rated load of the system, unless otherwise recommended by the manufacturer or a qualified person.

(c) You must keep written reports confirming the load rating of the vacuum lifting device.

(d) The load test must consist of one of the following procedures:

(i) Actual load test:

(A) Attach pads to the designated test load.

(B) Raise the test load a small distance to make sure the load is supported by the vacuum-lifting device.

(C) Hold the load for two minutes.

(D) Lower the load for release.

(ii) Simulated load test. Using a test fixture, apply forces to all load bearing components either individually or in assemblies equivalent to the forces encountered by the components if they were supporting a load that was 125% of the rated load.

(e) After the test, you must visually inspect the vacuum lifting device. You must correct any condition that constitutes a hazard before the lifting device is placed in service. If the correction affects the structure, then you must retest the lifter.

(8) **Repair.**

(a) You must repair vacuum lifting devices as follows:

(i) Adjustments and testing must be done only by a qualified person;

(ii) Use replacement parts that are at least equal to the original manufacturer's specification;

(iii) The lifting device must be inspected before returning to service as required in subsection (5) of this section.

(b) You must take the following precautions before repairs on a lifting device are started:

(i) You must move the vacuum-lifting device to an area where it will cause the least interference with other operations;

(ii) You must disconnect, lock out and tag all sources of power “Out of Service,” if applicable;

(iii) You must tag the lifting device removed from service for repair “Out of Service.”

(9) Lifting devices must be operated only by qualified personnel.

(10) **Operators must do the following:**

(a) Test all controls before use during a shift;

(b) Consult a competent person before handling the load whenever safety is in doubt;

(c) Respond only to instructions from competent persons, except for stop orders. The operator must obey a stop order at all times, no matter who gives it;

(d) Do not load the lifter in excess of its rated load or with any load that it isn't specifically designed for;

(e) Apply the lifter to the load according to the manufacturer's instructions;

(f) Check that:

(i) Ropes or chains are not kinked.

(ii) Multiple part lines are not twisted around each other.

(iii) The pad contact surface is clean and free of loose particles.

(g) Check that vacuum lines are not:

(i) Kinked or twisted.

(ii) Wrapped around or looped over parts of the lifting device that will move during the lift.

(h) Bring the lifter over the load in a way that minimizes swinging;

(i) Lift the load a few inches to make sure that the lifting device was correctly applied;

(j) Keep the load or lifter from contacting any obstruction;

(k) Do the following if power goes off while making a lift:

(i) Warn all people in the area;

(ii) Set the load down if possible.

(l) Set down any attached load and store the lifting device before leaving it;

(m) Check that all personnel are clear of the load;

(n) Using the lifter for side pulls or sliding the load is prohibited, unless specifically authorized by a qualified person;

(o) Riding on the load or the lifter is prohibited.

[Statutory Authority: RCW 49.17.010, .040, .050, and .060. 16-09-085 (Order 15-08), § 296-155-34010, filed 04/19/16, effective 05/20/16. Statutory Authority: RCW 49.17.010, .040, .050, and .060. 13-02-068 (Order 12-14), § 296-155-34010, filed 12/31/12, effective 02/01/13].

WAC 296-155-34015 Close proximity lifting magnets.

(1) Close proximity lifting magnets must be constructed in accordance with ASME B30.20-2010, Below-the-Hook Lifting Devices.

(2) **Rated load.**

(a) General application magnets must have the rated load (capacity) marked either on the lifting magnet or on a tag attached to it. The marking must refer to the instruction manual for information about decreases in rating due to the loads.

(i) Surface condition.

(ii) Thickness.

(iii) Percentage of contact with the magnet.

(iv) Temperature.

(v) Metallurgical composition.

(iv) Deflection.

(b) Specified application magnets must have the rated load (capacity) either on the lifting magnet or on a tag attached to it, referring to the specific loads for which the capacity applies.

(3) **Identification**. All close proximity lifting magnets must be marked with the following information:

(a) Manufacturer's name and address;

(b) Model and lifting magnet unit identification;

(c) Weight of lifting magnet;

(d) Rated load, as required in subsection (2) of this section;

(e) Duty cycle, if applicable;

(f) Cold current (amps) at (68 degrees Fahrenheit) (20 degrees Celsius), if applicable; and

(g) Voltage of primary power supply or battery, if applicable.

(h) If repaired or modified, name and address of repairer or modifier and (a) through (g) of this subsection if changed.

(4) Lifting magnets must be installed according to manufacturer's instructions.

(5) **Inspection.**

(a) A qualified person must inspect all new, altered, repaired, or modified lifting magnets according to Tables 24 and 25. The inspection of altered, repaired or modified lifting magnets can be limited to the parts affected, if a qualified person determines that is all that is needed.

(b) The operator must inspect the lifting magnet before and during every lift for any indication of damage. Check all of the following items:

(i) Lifting magnet face and surface of the load for foreign materials and smoothness;

(ii) Condition and operation of the:

(A) Control handle of a manually controlled permanent magnet;

(B) Indicators and meters when installed.

(c) Lifting magnets must be inspected, by the operator or another competent person, according to Table 24.

(d) A qualified person must determine whether signs of damage indicate a hazard.

(e) You must correct hazardous conditions before continuing use.

Table 24 Close Proximity Lifting Magnet Frequent Inspection

Inspect for:	How often:
Structural and suspension members for: • Deformation. • Cracks. Excessive wear on any part of the lifting magnet.	Normal service – Monthly. Heavy service – Weekly to monthly. Severe service – Daily to weekly. Special or infrequent service. As recommended by a qualified person before and after each occurrence. Before using, when a lifting magnet has been idle for more than one month.
The lifting magnet fact for: • Foreign materials • Smoothness	
Condition of lifting bail or sling suspension	
Condition and operation of control handle	
Condition and operation of indicators and meters, if applicable	
Electrical conductors, if applicable, that are visible without disassembly for: • Loose connections. • Continuity. • Corrosion. • Damage to insulation.	
Battery operated electromagnets for: • Proper level of battery electrolyte. • Corrosion of battery posts or connectors.	
Cracked housings, welds, and loose bolts.	
Legible labels and marking.	

Note:

- *Normal service means service that involves operation with various weights within the rated load limit, averaging less than 65% of rated load limits.*
- *Heavy service means service that involves operation within the rated load limit, that exceeds the limits of normal service.*
- *Severe service means service that involves normal or heavy service with abnormal operating conditions.*

(f) A qualified person must perform periodic inspections of close proximity lifting magnets according to Table 25. Include the items in Table 24 of this section.

(g) You must keep dated inspection records on all critical items such as structural and suspension members, lifting magnet face, lifting bail, control handle, indicators and meters.

(h) You must correct hazardous conditions before continuing use.

Table 25 Close Proximity Lifting Magnet Periodic Inspection

Inspect for:	How often:
Members, fasteners, locks, switches, warning labels, and lifting parts for: • Deformation. • Wear. • Corrosion.	• Normal service for equipment in place – yearly • Heavy service, unless external conditions indicate that disassembly should be done to permit detailed inspection – quarterly • Severe service–monthly • Special or infrequent service – as recommended by a qualified person before the first occurrence and as directed by the qualified person for any subsequent occurrences.
All electrical components, including controllers, battery, external power supply, power disconnects, meters, indicators, and alarms for: • Proper operation. • Condition.	
Lifting magnet coil must be tested for: • Ohmic and ground readings compared to manufacturer's standards.	

Note:

- *Normal service means service that involves operation with various weights within the rated load limit, averaging less than65% of rated load limits.*
- *Heavy service means service that involves operation within the rated load limit, that exceeds the limits of normal service.*
- *Severe service means service that involves normal or heavy service with abnormal operating conditions.*

(6) **Operational tests.**

(a) All new, altered, repaired or modified lifting magnets must be tested either by or under the direction of a qualified person before use. The qualified person can limit the testing of altered, repaired or modified lifting magnets to the parts affected.

(b) The following items must be tested:

(i) Moving parts;

(ii) Latches;

(iii) Stops;

(iv) Switches;

(v) Control devices;

(vi) Alarms; and

(vii) Warning devices, including:

(A) Indicator lights;

(B) Gauges;

(C) Horns;

(D) Bells; and

(E) Pointers.

(c) Dated reports of all operational tests must be kept on file.

(7) **Load tests.**

(a) Prior to initial use, all new, altered, repaired, or modified close proximity lifting devices must be load tested and inspected by a qualified person. The qualified person can limit the test to the areas affected by the alteration, repair, or modification.

(b) The breakaway force of lifting magnets must be tested according to manufacturer's directions or ANSI B30.20-2010.

(8) **Repair.**

(a) Close proximity lifting magnets must be repaired as follows:

(i) Adjustments and testing must be done by or under the direction of a qualified person;

(ii) Replacement parts used must be at least equal to the original manufacturer's specifications;

(iii) The magnet must be inspected before returning to service as required in subsection (5) of this section.

(b) You must take the following precautions before repairs on a magnet are started:

(i) You must disconnect, lock out and tag all sources of power "Out of Service," if applicable; and

(ii) You must tag any lifting magnet removed from service for repair "Out of Service."

(9) Lifting magnets must be operated only by qualified personnel.

(10) **Operators must do the following:**

(a) Test all controls before use, each shift;

(b) Check all meters and indicators for proper operation before making a lift;

(c) Consult a competent person before handling the load whenever there is any doubt as to safety;

(d) Respond only to instructions from competent persons, except for stop orders. Operators must obey a stop order at all times, no matter who gives it;

(e) Do not load the lifting magnet in excess of its rated load or with any load that it is not specifically designed for;

(f) Apply the magnet to the load according to the instruction manual;

(g) Check that:

(i) Lifter ropes or chains are not kinked;

(ii) Multiple part lines are not twisted around each other;

(iii) The lifting magnet face and the contact area on the load are clean.

(h) Bring the magnet over the load in a way that minimizes swinging;

(i) Lift the load a few inches to make sure that the lifting magnet has been correctly applied;

(j) Keep the load or lifting magnet from contact with any obstruction;

(k) Set down any attached load and store the lifting magnet before leaving it;

(l) Check that all people near the lift are warned before lifting;

(m) Using the lifter for side pulls or sliding the load is prohibited, unless specifically authorized by a qualified person; and

(n) Riding on loads or the lifting magnet is prohibited.

[Statutory Authority: RCW 49.17.010, .040, .050, and .060. 16-09-085 (Order 15-08), § 296-155-34015, filed 04/19/16, effective 05/20/16. Statutory Authority: RCW 49.17.010, .040, .050, and .060. 13-02-068 (Order 12-14), § 296-155-34015, filed 12/31/12, effective 02/01/13].

WAC 296-155-34020 Remotely operated lifting magnets.

(1) Remotely operated lifting magnets must be constructed in accordance with ASME B30.20-2010, Below-the-Hook Lifting Devices.

(2) **Identification**. All remotely operated lifting magnets must be marked with the following information:

(a) Manufacturer's name and address;

(b) Model or unit identification;

(c) Weight of lifting magnet;

(d) Duty cycle;

(e) Cold current;

(f) Voltage;

(g) If repaired or modified, name and address of repairer or modifier and (a) through (g) of this subsection if changed.

(3) Lifting magnets must be installed according to manufacturer's instructions.

(4) **Inspections.**

(a) A qualified person must inspect all new, altered, repaired or modified lifting magnets according to Tables 26 and 27. A qualified person can limit the inspection of altered, repaired or modified lifting magnets to the parts affected.

(b) Lifting magnets must be inspected, by the operator or another competent person, according to Table 26.

(c) A qualified person must determine whether signs of damage indicate a hazard.

(d) You must correct hazardous conditions before continuing use.

(e) A qualified person must perform periodic inspections of remotely operated lifting magnets according to Table 27. Include the items in Table 26.

(f) You must make records of apparent external conditions to provide the basis for a continuing evaluation.

(g) You must correct hazardous conditions before continuing use.

Table 26 Remotely Operated Lifting Magnet Frequent Inspection	
Inspect for:	**How often:**
Structural and suspension members for: • Deformation. • Cracks. • Excessive wear on any part of the lifting magnet.	• Normal service – Monthly. • Heavy service – Weekly to Monthly. • Severe service – Daily to Weekly. • Special or infrequent service - As recommended by a qualified person before and after each occurrence.
The lifting magnet face for: • Foreign Materials. • Smoothness	
Electrical conductors that are visible without disassembly.	• Before using, when a lifting magnet has been idle for more than one month.
Cracked housings, welds, and loose bolts.	

Note:

- *Normal service means service that involves operation with various weights within the rated load limit, averaging less than 65% of rated load limits.*
- *Heavy service means service that involves operation within the rated load limit, that exceeds the limits of normal service.*
- *Severe service means service that involves normal or heavy service with abnormal operating conditions.*

Table 27 Remotely Operated Lifting Magnet Periodic Inspection	
Inspect for:	**How often:**
Members, fasteners, and lifting parts for: • Deformation. • Wear. • Corrosion.	• Normal service for equipment in place – Yearly. • Heavy service – Quarterly. • Severe service – Monthly.
All electrical components for: • Proper operation. • Condition.	Special or infrequent service - As recommended by a qualified person before the first occurrence and as directed by the qualified person for any subsequent occurrences.
Magnet coil for: • Ohmic and ground readings compared to manufacture's standards.	

(5) **Operational tests.**

(a) All new, altered, repaired or modified lifting magnets must be tested either by or under the direction of a qualified person before use. The qualified person can limit the testing of altered, repaired or modified lifting magnets to the parts affected.

(b) The following items must be tested:

(i) All electrical equipment for proper operation;

(ii) Warning devices, including:

(A) Indicator lights;

(B) Gauges;

(C) Horns;

(D) Bells; and

(E) Pointers.

(c) Dated reports of all operational tests must be kept on file.

(6) **Repair.**

(a) Remotely operated lifting magnets must be repaired as follows:

(i) Have adjustments and testing done only by or under the direction of a qualified person;

(ii) Use replacement parts that are at least equal to the original manufacturer's specifications; and

(iii) Inspect the lifter according to subsection (4) of this section, before returning to service.

(b) You must take the following precautions before repairs on a lifter are started:

(i) You must disconnect, lock out and tag all sources of power "Out of Service."

(ii) You must tag any magnet removed from service for repair "Out of Service."

(7) Lifting devices must be operated only by qualified personnel.

(8) **Operators must do the following:**

(a) Test all controls before use during a shift;

(b) Consult a competent person before handling the load whenever there is any doubt as to safety;

(c) Respond only to instructions from competent persons, except for stop orders. Operators must obey a stop order at all times, no matter who gives it;

(d) Do not load the lifting magnet in excess of its rated load or with any load that it is not specifically designed for;

(e) Apply the lifting magnet to the load according to the instruction manual;

(f) Check that:

(i) Lifter ropes or chains are not kinked;

(ii) Multiple part lines are not twisted around each other.

(g) Bring the lifting magnet over the load in a way that minimizes swinging;

(h) Keep the load or magnet from contact with any obstruction;

(i) Set down any attached load and store the lifting magnet before leaving it;

(j) Check that all people are clear of the load;

(k) Using the lifter for side pulls or sliding the load is prohibited, unless specifically authorized by a qualified person; and

(l) Riding on loads or the lifting magnet is prohibited.

[Statutory Authority: RCW 49.17.010, .040, .050, and .060. 16-09-085 (Order 15-08), § 296-155-34020, filed 04/19/16, effective 05/20/16. Statutory Authority: RCW 49.17.010, .040, .050, and .060. 13-02-068 (Order 12-14), § 296-155-34020, filed 12/31/12, effective 02/01/13].

WAC 296-155-34025 Scrap and material handling grapples.

(1) Grapples must be constructed in accordance with ASME B30.20-2010, Below-the-Hook Lifting Devices.

(2) **Identification**. All grapples must be marked with the following information:

(a) Manufacturer's name and address;

(b) Serial number or unit identification;

(c) Grapple weight;

(d) Rated voltage, if applicable;

(e) Operating hydraulic pressure(s), if applicable;

(f) Rated capacity;

(g) If repaired or modified, name and address of repairer or modifier and (a) through (f) of this subsection if changed.

(3) **Grapple installation.**

(a) Grapples must be installed according to manufacturer's instructions.

(b) The hydraulic flows and pressures must be the same as shown in the manufacturer's instructions.

(4) **Inspections.**

(a) A qualified person must inspect all new, altered, repaired and modified grapples according to Table 28. A qualified person can limit the inspection of altered, repaired or modified grapples to the parts affected.

(b) Grapples must be visually inspected each shift they are used, by the operator or another competent person, according to Table 28.

(c) A qualified person must determine whether signs of damage indicate a hazard.

(d) Hazardous conditions must be corrected before continuing use.

Table 28 Grapple Frequents Inspection	
Inspect for:	**How often:**
Structural members for: • Deformation. • Cracks. • Excessive wear on any part of the grapple.	• Normal service – monthly • Heavy service – weekly to monthly • Severe service – daily to weekly • Special or infrequent service – as recommended by a qualified person before and after each occurrence. • Before using, when a grapple has been idle for more than one month.
Pins and bushings.	
Hydraulic lines.	
Hydraulic cylinders.	
Loose bolts.	
Electrical conductors that are visible without disassembly.	

Note:

- *Normal service means service that involves operation with various weights within the rated load limit, averaging less than 65% of rated load limits.*
- *Heavy service means service that involves operation within the rated load limit, that exceeds the limits of normal service.*
- *Severe service means service that involves normal or heavy service with abnormal operating conditions.*

(e) A qualified person must perform a periodic inspection of grapples according to Table 29. Include the items from Table 28 of this section.

(f) You must keep data inspection reports on critical items such as structural members, fasteners, lifting parts, hydraulic hoses, fittings and tubing, hydraulic motors and hydraulic cylinders.

(g) You must correct hazardous conditions before continuing use.

Table 29 Grapple Periodic Inspection	
Inspect for:	**How often:**
Members, fasteners, and lifting parts for: • Deformation. • Wear. • Corrosion.	• Normal service for equipment in place – yearly • Heavy service, unless external conditions indicate that disassembly should be done to permit detailed inspection – quarterly • Severe service–monthly • Special or infrequent service – as recommended by a qualified person before the first occurrence and as directed by the qualified person for any subsequent occurrences.
Hydraulic hose, fittings, and tubing for: • Evidence of leakage at the surface of the hose or its junction with metal couplings. • Blistering or abnormal deformation of the outer covering of the hose. • Leakage at threaded or clamped joints that cannot be eliminated by normal tightening or recommended procedures. • Excessive abrasion or scrubbing on the outer surface of hoses, rigid tubes, or fittings.	
Hydraulic motors for: • Loose bolts or fasteners. • Leaks at joints between sections. • Shaft seal leaks. • Unusual noises or vibration. • Loss of operating speed. • Excessive heating of the fluid. • Loss of pressure.	
Hydraulic cylinders for: • Drifting caused by fluid leaking across the piston seals. • Rod seal leakage. • Leaks at welded joints. • Scored, nicked, or dented cylinder rods. • Dented case (barrel). • Loose or deformed rod eyes or connecting joints.	
All electrical components, including meters, indicators and alarms for: • Proper operation. • Condition.	

(5) **Operational tests.**

(a) All new, altered, repaired or modified grapples must be tested either by or under the direction of a qualified person before use. The qualified person can limit the testing of altered, repaired or modified grapples to the parts affected.

(b) All warning devices must be tested, including:

(i) Indicator lights;

(ii) Gauges;

(iii) Horns;

(iv) Bells;

(v) Pointers;

(vi) Other warning devices.

(c) Dated reports of all operational tests must be kept on file.

(6) **Repair.**

(a) Grapples must be repaired as follows:

(i) You must have adjustments and testing done only by or under the direction of a qualified person;

(ii) You must use replacement parts that are at least equal to the original manufacturer's specifications;

(iii) You must inspect the grapple according to subsection (4) of this section, before returning to service;

(b) You must take the following precautions before repairs on a grapple are started:

(i) You must disconnect, lock out and tag all sources of power “Out of Service”;

(ii) You must tag any grapple removed from service for repair “Out of Service.”

(7) Grapples must be operated only by qualified personnel.

(8) **Operators must do the following:**

(a) Test all controls before use during a shift;

(b) Check all meters and indicators for proper operation before making a lift;

(c) Consult a competent person before handling the load whenever there is any doubt as to safety;

(d) Respond only to instructions from competent persons, except for stop orders. An operator must obey a stop order at all times, no matter who gives it;

(e) Do not load grapples in excess of the rated load or with any load that they are not specifically designed for;

(f) Apply the grapple to the load according to the instruction manual;

(g) Bring the grapple over the load in a way that minimizes swinging;

(h) Keep the load or grapple from contact with any obstruction;

(i) Set down any attached load and store the grapple before leaving it;

(j) Do not let anyone ride on loads or the grapple;

(k) Check that all people stay clear of the load.

{Statutory Authority: RCW 49.17.010, .040, .050, and .060. 16-09-085 (Order 15-08), § 296-155-200, filed 04/19/16, effective 05/20/16. Statutory Authority: RCW 49.17.010, .040, .050, and .060. 13-02-068 (Order 12-14), § 296-155-34020, filed 12/31/12, effective 02/01/13].

PART G
TOOLS-HAND AND POWER

LAST UPDATED: 05/20/2016

WAC 296-155-350 General requirements. 1

WAC 296-155-355 Hand tools. 2

WAC 296-155-360 Power-operated hand tools. 2

WAC 296-155-363 Safety requirements for powder actuated fastening systems, in accordance with ANSI A10.3-1985, Safety Requirements for Powder Actuated Fastening Systems. 4

WAC 296-155-36301 Scope. 4
WAC 296-155-36303 Purpose. 4
WAC 296-155-36305 Definitions applicable to this section. 5
WAC 296-155-36307 Requirements. 6
WAC 296-155-36309 Power loads. 8
WAC 296-155-36311 Fasteners. 9
WAC 296-155-36313 Operation. 10
WAC 296-155-36315 Limitations of use. 11
WAC 296-155-36317 Maintenance and storage. 12
WAC 296-155-36319 Authorized instructor. 12
WAC 296-155-36321 Qualified operator. 13

WAC 296-155-365 Abrasive wheels and tools. 15

WAC 296-155-367 Masonry saws. 17

WAC 296-155-370 Woodworking tools. 17

WAC 296-155-375 Jacks-Lever and ratchet, screw, and hydraulic. 20

WAC 296-155-380 Air receivers..... 21

WAC 296-155-350 General requirements.

(1) **Condition of tools**. You must maintain all hand and power tools and similar equipment, whether furnished by the employer or the employee, in a safe condition.

(2) **Guarding.**

(a) When power operated tools are designed to accommodate guards, they must be equipped with such guards when in use.

(b) Belts, gears, shafts, pulleys, sprockets, spindles, drums, fly wheels, chains, or other reciprocating, rotating or moving parts of equipment must be guarded if such parts are exposed to contact by employees or otherwise create a hazard. Guarding must meet the requirements as set forth in American National Standards Institute, B15.1-1953 (R1958), Safety Code for Mechanical Power-Transmission Apparatus.

(3) **Personal protective equipment**. Employees using hand and power tools and exposed to the hazard of falling, flying, abrasive, and splashing objects, or exposed to harmful dusts, fumes, mists, vapors, or gases must use the particular personal protective equipment necessary to protect them from the hazard. All personal protective equipment must meet the requirements and be maintained according to Parts B and C of this chapter.

(4) **Switches.**

(a) Scope. This subsection does not apply to concrete vibrators, concrete breakers, powered tampers, jack hammers, rock drills, and similar hand operated power tools.

(b) All hand-held powered platen sanders, grinders with wheels 2-inch diameter or less, routers, planers, laminate trimmers, nibblers, shears, scroll saws, and jigsaws with blade shanks 1/4 of an inch wide or less may be equipped with only a positive “on-off” control.

(c) All hand-held powered drills, tappers, fastener drivers, horizontal, vertical, and angle grinders with wheels greater than 2 inches in diameter, disc sanders, belt sanders, reciprocating saws, saber saws, and other similar operating powered tools must be equipped with a momentary contact “on-off” control and may have a lock-on control provided that turn-off can be accomplished by a single motion of the same finger or fingers that turn it on.

(d) All other hand-held powered tools, such as circular saws, chain saws, and percussion tools, must be equipped with a constant pressure switch that will shut off the power when the pressure is released.

(e) Disconnect switches. All fixed power driven tools must be provided with a disconnect switch that can either be locked or tagged in the off position.

(f) Self-feed. Automatic feeding devices must be installed on machines whenever the nature of the work will permit. Feeder attachments must have the feed rolls or other moving parts covered or guarded so as to protect the operator from hazardous points.

[Statutory Authority: RCW 49.17.010, .040, .050, and .060. 16-09-085 (Order 15-08), § 296-155-350, filed 04/19/16, effective 05/20/16. Order 74-26, § 296-155-350, filed 5/7/74, effective 6/6/74.]

WAC 296-155-355 Hand tools.

(1) You must not issue or permit the use of unsafe hand tools.

(2) You must not use wrenches, including adjustable, pipe, end, and socket wrenches when jaws are sprung or worn to the point that slippage occurs.

(3) You must not cut nails with an axe.

(4) You must keep impact tools, such as drift pins, wedges, and chisels, free of mushroomed heads.

(5) You must keep the wooden handles of tools free of splinters or cracks and must be kept tight in the tool.

[Statutory Authority: RCW 49.17.010, .040, .050, and .060. 16-09-085 (Order 15-08), § 296-155-355, filed 04/19/16, effective 05/20/16. Statutory Authority: RCW 49.17.040 and 49.17.050. 86-03-074 (Order 86-14), § 296-155-355, filed 1/21/86; Order 74-26, § 296-155-355, filed 5/7/74, effective 6/6/74.]

WAC 296-155-360 Power-operated hand tools.

(1) **Electric power-operated tools**.

(a) Electric power operated tools must either be of the approved double-insulated type or grounded in accordance with Part I of this chapter.

(b) The use of electric cords for hoisting or lowering tools must not be permitted.

(2) **Pneumatic power tools.**

(a) Pneumatic power tools and hose sections must be secured by threaded couplings, quick disconnect couplings or by 100 pound tensile strength safety chain or equivalent across each connection to prevent the tool or hose connections from becoming accidentally disconnected.

(b) Safety clips or retainers must be securely installed and maintained on pneumatic impact (percussion) tools to prevent attachments from being accidentally expelled.

(c) All pneumatically driven nailers, staplers, and other similar equipment provided with automatic fastener feed, must have a safety device on the muzzle to prevent the tool from ejecting fasteners, unless the muzzle is in contact with the work surface.

Exception: Pneumatic nailers or staplers utilizing "fine wire" brads or staples do not require a muzzle contact safety device, provided:

1. *The overall weight of the fastening device does not exceed weight of standard 18 gauge wire, 1-1/2 inches long.*
2. *The operator and any other person within 12 feet of the point of operation wear approved eye protection.*

> *Note: The normal maximum diameter tolerance for manufacturing standard 18 gauge wire is .045 inches.*

(d) You must not use compressed air at the nozzle for cleaning purposes except where reduced to less than 30 p.s.i. and then only with effective chip guarding and personal protective equipment which meets the requirements of Part C of this chapter.

> *Note: The above requirement does not apply to concrete form, mill scale and similar cleaning purposes. Concrete form, mill scale, and similar cleaning may be performed with air pressure exceeding 30 p.s.i. provided the nozzle and/or cleaning pipe is at least 3 feet long with a quick-closing (deadman) valve between the hose and the nozzle or pipe. The operator and all other employees within range of flying debris must be protected by eye or face protection as specified in WAC 296-155-215.*

(e) You must not exceed the manufacturer's safe operating pressure for hoses, pipes, valves, filters, and other fittings.

(f) You must not permit the use of hoses for hoisting or lowering tools.

(g) All hoses exceeding 1/2-inch inside diameter must have a safety device at the source of supply or branch line to reduce pressure in case of hose failure.

(h) Airless spray guns of the type which atomize paints and fluids at high pressures (1,000 pounds or more per square inch) must be equipped with automatic or visible manual safety devices which will prevent pulling of the trigger to prevent release of the paint or fluid until the safety device is manually released.

(i) In lieu of the above, a diffuser nut which will prevent high pressure, high velocity release, while the nozzle tip is removed, plus a nozzle tip guard which will prevent the tip from coming into contact with the operator, or other equivalent protection, must be provided.

(j) Abrasive blast cleaning nozzles. The blast cleaning nozzles must be equipped with an operating valve which must be held open manually. A support must be provided on which the nozzle may be mounted when it is not in use.

(3) **Fuel powered tools.**

(a) You must stop all fuel powered tools while being refueled, serviced, or maintained, and you must transport, handle, and store fuel in accordance with Part D of this chapter.

(b) When fuel powered tools are used in enclosed spaces, the applicable requirements for concentrations of toxic gases and use of personal protective equipment as outlined in Parts B and C of this chapter apply.

(4) **Hydraulic power tools.**

(a) The fluid used in hydraulic powered tools must be fire resistant fluid approved under schedule 30 of the Bureau of Mines, U.S. Department of the Interior, and must retain its operating characteristics at the most extreme temperatures to which it will be exposed.

(b) The manufacturer's safe operating pressures for hoses, valves, pipes, filters, and other fittings must not be exceeded.

[Statutory Authority: RCW 49.17.010, .040, .050, and .060. 16-09-085 (Order 15-08), § 296-155-360, filed 04/19/16, effective 05/20/16. Statutory Authority: Chapter 49.17 RCW. 94-15-096 (Order 94-07), § 296-155-360, filed 7/20/94, effective 9/20/94. Statutory Authority: RCW 49.17.040 and 49.17.050. 86-03-074 (Order 86-14), § 296-155-360, filed 1/21/86; Order 76-29, § 296-155-360, filed 9/30/76; Order 76-6, § 296-155-360, filed 3/1/76; Order 74-26, § 296-155-360, filed 5/7/74, effective 6/6/74.]

WAC 296-155-363 Safety requirements for powder actuated fastening systems, in accordance with ANSI A10.3-1985, Safety Requirements for Powder Actuated Fastening Systems.

[Statutory Authority: Chapter 49.17 RCW. 91-11-070 (Order 91-01), § 296-155-363, filed 5/20/91, effective 6/20/91. Statutory Authority: RCW 49.17.040 and 49.17.050. 86-03-074 (Order 86-14), § 296-155-363, filed 1/21/86.]

WAC 296-155-36301 Scope.

This standard provides safety requirements for a powder actuated fastening tool or machine which propels a stud, pin, fastener, or other object for the purpose of affixing it by penetration to another object.

This standard does not apply to devices designed for attaching objects to soft construction materials, such as wood, plaster, tar, dry wallboard, and the like, or to stud welding equipment.

[Statutory Authority: RCW 49.17.040 and 49.17.050. 86-03-074 (Order 86-14), § 296-155-36301, filed 1/21/86.]

WAC 296-155-36303 Purpose.

The purpose of this standard is to provide reasonable safety for life, limb, and property, by establishing requirements for design, construction, operation, service, and storage of powder actuated fastening tools, fasteners and power loads.

[Statutory Authority: RCW 49.17.040 and 49.17.050. 86-03-074 (Order 86-14), § 296-155-36303, filed 1/21/86.]

WAC 296-155-36305 Definitions applicable to this section.

Angle control. A safety feature designed to prevent a tool from operating when tilted beyond a predetermined angle.

Approved. Meeting the requirements of this standard and acceptable to the department of labor and industries.

Cased power load. A power load with the propellant contained in a closed case.

Caseless power load. A power load with the propellant in solid form not requiring containment.

Chamber (noun). The location in the tool into which the power load is placed and in which it is actuated.

Chamber (verb). To fit the chamber according to manufacturer's specifications.

Fasteners. Any pins (unthreaded heads) or studs (threaded heads) driven by powder actuated tools.

Fixture. A special shield that provides equivalent protection where the standard shield cannot be used.

Head. That portion of a fastener that extends above the work surface after being properly driven.

Misfire. A condition in which the power load fails to ignite after the tool has been operated.

Powder actuated fastening system. A method comprising the use of a powder actuated tool, a power load, and a fastener.

Powder actuated tool (also known as tool). A tool that utilizes the expanding gases from a power load to drive a fastener.

Power load - the energy source used in powder actuated tools.

Qualified operator. A person who meets the requirements of WAC 296-155-36321 (1) and (2).

Shield. A device, attached to the muzzle end of a tool, which is designed to confine flying particles.

Spalled area. A damaged and nonuniform concrete or masonry surface.

Test velocity. The measurement of fastener velocity performed in accordance with WAC 296-155-36307 (1)(m).

Tools. Tools can be divided into two types: Direct acting and indirect acting; and 3 classes: Low velocity, medium velocity, and high velocity.

- **Direct acting tool** - a tool in which the expanding gas of the power load acts directly on the fastener to be driven.
- **Indirect acting tool** - a tool in which the expanding gas of the power load acts on a captive piston, which in turn drives the fastener.
- **Low-velocity tool** - a tool whose test velocity has been measured ten times while utilizing the highest velocity combination of:
  - The lightest commercially available fastener designed for that specific tool;
  - The strongest commercially available power load that will properly chamber in the tool;

- The piston designed for that tool and appropriate for that fastener; that will produce an average test velocity from the 10 tests not in excess of 100 meters per second (328 feet per second) with no single test having a velocity of over 108 m/s (354 ft/s).

- **Medium-velocity tool** - a tool whose test velocity has been measured 10 times while utilizing the highest velocity combination of:
  - The lightest commercially available fastener designed for the tool;
  - The strongest commercially available power load that will properly chamber in the tool;
  - The piston designed for that tool and appropriate for that fastener; that will produce an average test velocity from 10 tests in excess of 100 m/s (328 ft/s) but not in excess of 150 m/s (492 ft/s) with no single test having a velocity of 160 m/s (525 ft/s).

- **High-velocity tool** - a tool whose test velocity has been measured 10 times while utilizing the combination of:
  - The lightest commercially available fastener designed for the tool;
  - The strongest commercially available power load which will properly chamber in the tool; that will produce an average velocity from the 10 tests in excess of 150 m/s (492 ft/s).

[Statutory Authority: RCW 49.17.010, .040, .050, and .060. 16-09-085 (Order 15-08), § 296-155-36305, filed 04/19/16, effective 05/20/16. Statutory Authority: Chapter 49.17 RCW. 94-15-096 (Order 94-07), § 296-155-36305, filed 7/20/94, effective 9/20/94. Statutory Authority: RCW 49.17.040 and 49.17.050. 86-03-074 (Order 86-14), § 296-155-36305, filed 1/21/86.]

WAC 296-155-36307 Requirements.

(1) **General.**

(a) The tool must be designed to prevent inadvertent actuation.

(b) The tool must be designed to prevent actuation when dropped in any attitude from a height of 3 meters (10 ft) onto a smooth, hard surface such as concrete or steel, if such actuation can propel a fastener or any part thereof in free flight.

(c) Actuation of the tool must be dependent upon at least two separate and distinct operations by the operator, with at least one operation being separate from the operation of holding the tool against the work surface.

(d) The tool must be designed not to be operable other than against a work surface with a force on the work surface equal to 22 newtons (5 lb) greater than the weight of the tool or a minimum impact energy of 4 joules (3 ft-lb).

(e) All tools must be designed so that compatible protective shields or fixtures, designed, built, and supplied by the manufacturer of the tool, can be used (see WAC 296-155-36307 (2)(b), (3)(b), (4)(b) and 296-155-36313(8)).

(f) The tool must be designed so that a determinable means of varying the power levels is available for selecting a power level adequate to perform the desired work (see WAC 296-155-36309(5)).

(g) The tool must be designed so that all principal functional parts can be checked for foreign matter that may affect operation.

(h) The tool must be designed so that all parts will be of adequate strength to resist maximum stresses imposed upon actuation when the tool is used in accordance with the manufacturer's instructions and is powered by any commercially available power load which will properly chamber in the tool.

(i) Each tool must bear a legible permanent model designation, which must serve as a means of identification. Each tool must also bear a legible, permanent manufacturer's unique serial number.

(j) You must provide a lockable container must be provided for each tool. The words "POWDER ACTUATED TOOL" must appear in plain sight on the outside of the container. The following notice must be attached on the inside cover of the container:

"WARNING - POWDER ACTUATED TOOL. TO BE USED ONLY BY A QUALIFIED OPERATOR AND KEPT UNDER LOCK AND KEY WHEN NOT IN USE."

(k) Each tool must bear a durable warning label with the following statement, or the equivalent:

"WARNING - FOR USE ONLY BY QUALIFIED OPERATORS ACCORDING TO MANUFACTURER'S INSTRUCTION MANUAL."

(l) Each tool must be supplied with the following:

(i) Operator's instruction and service manual.

(ii) Power load chart.

(iii) Tool inspection record.

(iv) Service tools and accessories.

(m) In determining tool test velocities, you must measure the velocity of the fastener in free flight at a distance of 2 meters (6-1/2 ft) from the muzzle end of the tool, using accepted ballistic test methods.

(2) **Design requirements - low-velocity class.**

(a) Low-velocity tools, indirect-acting (piston) type, as defined in WAC 296-155-36305, must meet the requirements of WAC 296-155-36307(1).

(b) A shield must be supplied with each tool.

(3) **Design requirements - medium-velocity class.**

(a) Medium-velocity tools, indirect-acting (piston) type, as defined in WAC 296-155-36305, must meet the requirements of WAC 296-155-36307(1).

(b) The tool must have a shield at least 63 mm (2-1/2 in) in diameter mounted perpendicular to, and concentric with, the muzzle end, when it is indexed to the center position. A special shield or fixture may be used when it provides equivalent protection.

(c) The tool must be designed so that it cannot be actuated unless it is equipped with a shield or fixture.

(d) The tool must be designed with angle control so that it will not actuate when equipped with the standard shield indexed to the center position if the bearing surface of the shield is tilted more than 12 degrees from a flat surface.

(4) **Design requirements - high-velocity class.**

(a) High-velocity tools, direct-acting or indirect-acting type, as defined in WAC 296-155-36305, must meet the requirements of WAC 296-155-36307(1).

(b) The tool must have a shield at least 88 mm (3-1/2 in) in diameter mounted perpendicular to, and concentric with, the muzzle end, when it is indexed to the center position. A special shield or fixture may be used when it provides equivalent protection.

(c) The tool must be designed so that it cannot be actuated unless it is equipped with a shield or fixture.

(d) The tool must be designed with angle control so that it will not actuate when equipped with the standard shield indexed to the center position, if the bearing surface of the shield is tilted more than 8 degrees from a flat surface.

[Statutory Authority: RCW 49.17.010, .040, .050, and .060. 16-09-085 (Order 15-08), § 296-155-36307, filed 04/19/16, effective 05/20/16. Statutory Authority: RCW 49.17.040 and 49.17.050. 86-03-074 (Order 86-14), § 296-155-36307, filed 1/21/86.]

WAC 296-155-36309 Power loads.

(1) **Identification of cased power loads**. Cased power loads must be coded to identify power load levels by case color and power load color as specified in Table G-1.

(2) **Identification of caseless power loads**. Caseless power loads must be coded to identify power load levels by power load color as specified in Table G-1 and by configuration.

(3) **Power load use limitation**. No power load (cased or caseless) must be used if it will properly chamber in any existing commercially available tool and will cause a fastener to have a test velocity in excess of the maximum test velocities specified for the said tool.

(4) **Identification of power load packages**. Power load packages must provide a visual number-color indication of the power level of the power load as specified in Table G-1.

TABLE G-1 Power Load Identification				
Power Level	**Color Identification**		**Nominal Velocity**	
	Case Color	**Load Color**	**Meters per Second (± 13.5)**	**Feet per Second (± 45)**
1	Brass	Gray	91	300
2	Brass	Brown	119	390
3	Brass	Green	146	480
4	Brass	Yellow	174	570
5	Brass	Red	201	660
6	Brass	Purple	229	750
7	Nickel	Gray	256	840
8	Nickel	Brown	283	930
9	Nickel	Green	311	1020
10	Nickel	Yellow	338	1110
11	Nickel	Red	366	1200
12	Nickel	Purple	393	1290

Note: The nominal velocity applies to a 9.53 mm (3/8-in) diameter 22.7-gram (350-grain) ballistic slug fired in a test device and has no reference to actual fastener velocity developed in any specific tool.

(5) **Optional power load variation**. Where means other than power loads of varying power levels are to be used to control penetration, such means must provide an equivalent power level variation.

[Statutory Authority: RCW 49.17.010, .040, .050, and .060. 16-09-085 (Order 15-08), § 296-155-36309, filed 04/19/16, effective 05/20/16. Statutory Authority: RCW 49.17.040 and 49.17.050. 86-03-074 (Order 86-14), § 296-155-36309, filed 1/21/86.]

WAC 296-155-36311 Fasteners.

Fasteners for use in power actuated tools must be designed and manufactured to function compatibly with these tools and, when used in masonry, concrete, or steel, to effect properly the application for which they are recommended.

[Statutory Authority: RCW 49.17.010, .040, .050, and .060. 16-09-085 (Order 15-08), § 296-155-36311, filed 04/19/16, effective 05/20/16. Statutory Authority: RCW 49.17.040 and 49.17.050. 86-03-074 (Order 86-14), § 296-155-36311, filed 1/21/86.]

WAC 296-155-36313 Operation.

(1) **Acceptable tools**. You must only use tools meeting the requirements of this standard.

(2) **Qualified operators**. Only qualified operators must operate tools.

(3) **Use lowest velocity**. You must use the lowest velocity class of tool that will properly set the fastener.

(4) **Operating limitations**. You must operate tools in strict accordance with the manufacturer's instructions.

(5) **Personal protection**. Operators, assistants, and adjacent personnel must wear eye or face protection, or both, when tool is in use. Hearing protection must be used when making fastenings in confined areas.

(6) **Daily inspections**. Each day, prior to use, the operator must inspect the tool to determine that it is in proper working condition in accordance with the testing methods recommended by the manufacture of the tool.

(7) **Defective tools**. You must immediately remove from service any tool found not to be in proper working condition and tag it "DEFECTIVE"; you must not use it until it has been properly repaired in accordance with the manufacturer's instructions.

(8) **Proper accessories**. You must use the proper shield, fixture, adapter, or accessory, suited for the application, as recommended and supplied by the manufacturer.

(9) **Proper loads and fasteners**. You must only use those types of fasteners and power loads recommended by the tool manufacturer for a particular tool, or those providing the same level of safety and performance.

(10) **Questionable material**. Before fastening into any questionable material, the operator must determine its suitability by using a fastener as a center punch. If the fastener point does not easily penetrate, is not blunted, and does not fracture the material, initial test fastenings must then be made in accordance with the tool manufacturer's recommendations. (See WAC 296-155-36315(3).)

(11) **Tool safety**. You must not load any tool unless it is being prepared for immediate use. If the work is interrupted after loading, you must unload the tool at once.

(12) Powder actuated magazine or clip-fed tools are not considered loaded unless a power load is actually in the ram (firing chamber), even though the magazine or clip is inserted in the tool. If work is interrupted, you must clear the firing chamber and remove the magazine or clip.

(13) **Pointing tools**. You must not load tools until just prior to the intended firing time. You must not point either loaded or empty tools at any person; you must keep hands clear of the open barrel end.

(14) **Tool perpendicular to work**. You must always hold the tool perpendicular to the work surface when fastening into any material, except for specific applications recommended by the tool manufacturer.

(15) **Misfires**. In the event of a misfire, the operator must hold the tool firmly against the work surface for a period of 30 seconds and then follow the explicit instructions set forth in the manufacturer's instructions.

(16) **Different power levels**. You must keep power loads of different power levels and types in separate compartments or containers.

(17) **Signs**. You must post a sign, at least 20 x 25 cm (8 x 10 in), using boldface type no less than 2.5 cm (1 in) in height, in plain sight on all construction projects where tools are used. The sign must bear wording similar to the following: "POWER ACTUATED TOOL IN USE."

[Statutory Authority: RCW 49.17.010, .040, .050, and .060. 16-09-085 (Order 15-08), § 296-155-36313, filed 04/19/16, effective 05/20/16. Statutory Authority: Chapter 49.17 RCW. 91-11-070 (Order 91-01), § 296-155-36313, filed 5/20/91, effective 6/20/91; 89-11-035 (Order 89-03), § 296-155-36313, filed 5/15/89, effective 6/30/89. Statutory Authority: RCW 49.17.040 and 49.17.050. 86-03-074 (Order 86-14), § 296-155-36313, filed 1/21/86.]

WAC 296-155-36315 Limitations of use.

(1) **Explosive and flammable atmospheres**. You must not use the tool in an explosive or flammable atmosphere.

(2) **Unattended tools prohibited**. You must never leave a tool unattended in a place where it would be available to unauthorized persons.

(3) **Fasteners in hard, brittle areas**. You must not drive fasteners into very hard or brittle materials including, but not limited to, cast iron, glazed tile, hardened steel, glass block, natural rock, hollow tile, or most brick. (See WAC 296-155-36313(10).)

(4) **Fasteners in soft materials**. You must not drive fasteners into easily penetrated or thin materials, or materials of questionable resistance, unless backed by a material that will prevent the fastener from passing completely through the other side.

(5) **Fasteners in steel**. You must not drive fasteners closer than 13 mm (1/2 in) from the edge of steel except for specific applications recommended by the tool manufacturer.

(6) **Fasteners in masonry**. You must not drive fasteners closer than 7.5 cm (3 in) from the unsupported edge of masonry materials except for specific applications recommended by the tool manufacturer.

(7) **Fasteners in concrete**. You must not drive fasteners into concrete unless material thickness is at least 3 times the fastener shank penetration.

(8) **Fasteners in spalls**. You must not drive fasteners into any spalled area.

(9) **Fasteners in existing holes**. You must not drive fasteners through existing holes unless a specific guide means, as recommended and supplied by the tool manufacturer, is used to ensure positive alignment.

[Statutory Authority: RCW 49.17.010, .040, .050, and .060. 16-09-085 (Order 15-08), § 296-155-36315, filed 04/19/16, effective 05/20/16. Statutory Authority: RCW 49.17.040 and 49.17.050. 86-03-074 (Order 86-14), § 296-155-36315, filed 1/21/86.]

WAC 296-155-36317 Maintenance and storage.

(1) **Use of tools**. You must have the tool serviced and inspected for worn or damaged parts at regular intervals as recommended by the tool manufacturer. Prior to the tool being put back into use, you must have all worn or damaged parts replaced by a qualified person using only parts supplied by the tool manufacturer. A record of this inspection must be noted and dated on the tool inspection record.

(2) **Instruction manuals**. You must store instruction manuals, maintenance tools, and accessories supplied with the tool in the tool container when not in use.

(3) **Security**. You must lock powder actuated tools and power loads in a container and stored in a safe place when not in use and you must ensure that they are accessible only to authorized personnel.

[Statutory Authority: RCW 49.17.010, .040, .050, and .060. 16-09-085 (Order 15-08), § 296-155-36317, filed 04/19/16, effective 05/20/16. Statutory Authority: RCW 49.17.040 and 49.17.050. 86-03-074 (Order 86-14), § 296-155-36317, filed 1/21/86.]

WAC 296-155-36319 Authorized instructor.

(1) **Operator qualifications**. Only persons trained and authorized by the tool manufacturer or by an authorized representative of the tool manufacturer are qualified to instruct and qualify operators for the manufacturer's powder actuated tools.

(2) **Instructor qualifications**. All authorized instructors must have read and be familiar with this standard, and must be capable of:

(a) Disassembling, servicing, and reassembling the tool.

(b) Recognizing any worn or damaged parts or defective operation.

(c) Recognizing and clearly identifying the colors used to identify power load levels.

(d) Using the tool correctly within the limitations of its use.

(e) Training and testing operators prior to issuing a qualified operator's card.

(3) **Instructor's card**. All authorized instructors must have in their possession a valid authorized instructor's card issued and signed by an authorized representative of the manufacturer. The card must be wallet size of approximately 6 x 9 cm (2-1/2 x 3-1/2 in), and the face of the card must bear text similar to that shown in Figure G-1.

(4) **List of instructors**. A list of all instructors authorized by the manufacturer to instruct and qualify operators must be maintained by the tool manufacturer and be made available to the department of labor and industries.

(5) **Revocation of instructor card**. Instructor's card may be revoked by the authorizing agent or the department of labor and industries, if the instructor is known to have issued a qualified operator's card in violation of any regulation contained in this standard. When an instructor is no longer authorized to issue qualified operator's cards, cards must be surrendered to the authorizing agent or the department of labor and industries.

AUTHORIZED INSTRUCTOR

_____ Powder Actuated Tools Date_____
(MAKE)

Card No. _____ Social Security No. _____
This certifies that_____
(NAME OF INSTRUCTOR)
has received the prescribed training in the operation and maintenance of powder actuated tools manufactured by
_____
(NAME OF MANUFACTURER)
and is qualified to train and certify operators of _____
powder actuated tools. (MAKE)
Model(s)_____
Authorized by
_____
I have received instruction by the manufacturer's authorized representative in the training of operators of the above tools and agree to conform to all rules and regulations governing the instruction of tool operators.
Date of Birth _____
_____
(SIGNATURE)

Figure G-1
Sample of Authorized Instructor's Card

[Statutory Authority: RCW 49.17.010, .040, .050, and .060. 16-09-085 (Order 15-08), § 296-155-36319, filed 04/19/16, effective 05/20/16. Statutory Authority: Chapter 49.17 RCW. 94-15-096 (Order 94-07), § 296-155-36319, filed 7/20/94, effective 9/20/94. Statutory Authority: RCW 49.17.040 and 49.17.050. 86-03-074 (Order 86-14), § 296-155-36319, filed 1/21/86.]

WAC 296-155-36321 Qualified operator.

(1) **Operator qualifications**. The operator must be trained by an authorized instructor to be familiar with the provisions of this standard and the instructions provided by the manufacturer for operation and maintenance. The operator must also be capable of:

(a) Reading and understanding the manufacturer's instruction manual.

(b) Cleaning the tool correctly.

(c) Recognizing any worn or damaged parts or defective operation.

(d) Recognizing the number-color code system used in this standard to identify power load levels. In the event the operator is unable to distinguish the colors used, the operator must be given special instruction which will enable the operator to avoid error.

(e) Using a tool correctly within the limitations of its use and demonstrate competence by operating the tool in the presence of the instructor.

(2) **Operator examination**. After training, the operator must substantiate competency by completing satisfactorily a written examination provided by the manufacturer of the tool.

(a) The operator's written examination must consist of questions to establish the operator's competence with respect to:

(i) The requirements of this standard;

(ii) The powder actuated fastening system; and

(iii) The specific details of operation and maintenance of the tool(s) involved.

(b) The examination must provide a statement, attested to by the instructor, that the applicant can (or cannot) readily distinguish the colors used to identify power load levels (see WAC 296-155-36309).

(3) **Operator's card**. Each applicant who meets the requirements as set forth in subsections (1) and (2) of this section must receive a qualified operator's card, issued and signed by both the instructor and applicant. While using the tool, the operator must carry this card.

(4) **Card features**. The qualified operator's card supplied by the manufacturer must be wallet size of approximately 6 x 9 cm (2-1/2 x 3-1/2 in), and the face of the card must bear text similar to that shown in Figure G-2.

(5) **Revocation notation**. There must be printed on the card a notation reading:

"Revocation of card - Failure to comply with any of the rules and regulations for safe operation of powder actuated fastening tools must be cause for the immediate revocation of this card."

QUALIFIED OPERATOR

_____ Powder Actuated Tools Date_____
(MAKE)

Card No. _____ Social Security No. _____

This certifies that_____
(NAME OF OPERATOR)

has received the prescribed training in the operation of powder actuated tools manufactured by

_____
(NAME OF MANUFACTURER)

Model(s)_____

Trained and issued by:_____
(SIGNATURE OF AUTHORIZED INSTRUCTOR)

I have received instruction in the safe operation and maintenance of powder actuated fastening tools of the makes and models specified and agree to conform to all rules and regulations governing that use.

Date of Birth _____

_____
(SIGNATURE)

Figure G-2

Sample of Qualified Operator's Card

[Statutory Authority: RCW 49.17.010, .040, .050, and .060. 16-09-085 (Order 15-08), § 296-155-36321, filed 04/19/16, effective 05/20/16. Statutory Authority: Chapter 49.17 RCW. 94-15-096 (Order 94-07), § 296-155-36321, filed 7/20/94, effective 9/20/94. Statutory Authority: RCW 49.17.040 and 49.17.050. 86-03-074 (Order 86-14), § 296-155-36321, filed 1/21/86.]

WAC 296-155-365 Abrasive wheels and tools.

(1) **Power**. You must supply all grinding machines with sufficient power to maintain the spindle speed at safe levels under all conditions of normal operation.

(2) **Guarding.**

(a) Grinding machines must be equipped with safety guards in conformance with the requirements of American National Standards Institute, B7.1-1978, Safety Code for the Use, Care and Protection of Abrasive Wheels.

(b) Guard design. The safety guard must cover the spindle end, nut, and flange projections. The safety guard must be mounted so as to maintain proper alignment with the wheel, and the strength of the fastenings must exceed the strength of the guard, except:

(i) Safety guards on all operations where the work provides a suitable measure of protection to the operator, may be so constructed that the spindle end, nut, and outer flange are exposed; and where the nature of the work is such as to entirely cover the side of the wheel, the side covers of the guard may be omitted; and

(ii) The spindle end, nut, and outer flange may be exposed on machines designed as portable saws.

(3) **Use of abrasive wheels.**

(a) Floor stand and bench mounted abrasive wheels, used for external grinding, must be provided with safety guards (protection hoods). The maximum angular exposure of the grinding wheel periphery and sides must be not more than 90°, except that when work requires contact with the wheel below the horizontal plane of the spindle, the angular exposure must not exceed 125°. In either case, the exposure must begin not more than 65° above the horizontal plane of the spindle. Safety guards must be strong enough to withstand the effect of a bursting wheel.

(b) Floor and bench-mounted grinders must be provided with work rests which are rigidly supported and readily adjustable. You must adjust such work rests to a distance not to exceed 1/8 inch from the surface of the wheel. The work rest may be omitted when contacts of the work piece with the grinding surface below the horizontal plane of the spindle are necessary and unavoidable, or where the size or shape of the work piece precludes use of the work rest.

(c) Cup type wheels used for external grinding must be protected by either a revolving cup guard or a band type guard in accordance with the provisions of the American National Standards Institute, B7.1-1978, Safety Requirements for the Use, Care, and Protection of Abrasive Wheels. Abrasive wheels must only be used on machines provided with safety guards, except the following:

(i) Wheels used for internal work while within the work being ground.

(ii) Mounted wheels, 2 inches and smaller in diameter used in portable operations.

(iii) Types 16, 17, 18, 18R and 19 cones and plugs, and threaded hole pot balls where the work offers protection or where the size does not exceed 3 inches in diameter by 5 inches in length.

(iv) Metal centered diamond lapidary wheels either notched, segmented or continuous rim used with a coolant deflector, when operated at speeds up to 3500 surface feet per minute (S.F.P.M.).

(v) Type 1 wheels not larger than 2 inches in diameter and not more than 1/2 inch thick, operating at peripheral speeds less than 1800 SFPM when mounted on mandrels driven by portable drills.

(iv) Type 1 reinforced wheels not more than 3 inches in diameter and 1/4 inch in thickness, operating at peripheral speeds not exceeding 9500 SFPM, provided that safety glasses and face shield are worn.

(vii) Valve seat grinding wheels.

(d) Portable abrasive wheels used for internal grinding must be provided with safety flanges (protection flanges) meeting the requirements of subdivision (f) of this subsection, except as follows:

(i) When wheels 2 inches or less in diameter which are securely mounted on the end of a steel mandrel are used;

(ii) If the wheel is entirely within the work being ground while in use.

(e) When safety guards are required, they must be so mounted as to maintain proper alignment with the wheel, and the guard and its fastenings must be of sufficient strength to retain fragments of the wheel in case of accidental breakage. The maximum angular exposure of the grinding wheel periphery and sides must not exceed 180°.

(f) When safety flanges are required, they must be used only with wheels designed to fit the flanges. Only safety flanges, of a type and design and properly assembled so as to ensure that the pieces of the wheel will be retained in case of accidental breakage, must be used.

(g) You must closely inspect all abrasive wheels and ring-tested before mounting to ensure that they are free from cracks or defects.

(h) Grinding wheels must fit freely on the spindle and must not be forced on. The spindle nut must be tightened only enough to hold the wheel in place.

(i) All employees using abrasive wheels must be protected by eye protection equipment in accordance with the requirements of Part C of this chapter, except when adequate eye protection is afforded by eye shields which are permanently attached to the bench or floor stand.

(4) **Other requirements**. All abrasive wheels and tools used by employees must meet other applicable requirements of American National Standards Institute, B7.1-1978, Safety Code for the Use, Care and Protection of Abrasive Wheels.

[Statutory Authority: RCW 49.17.010, .040, .050, and .060. 16-09-085 (Order 15-08), § 296-155-365, filed 04/19/16, effective 05/20/16. Statutory Authority: Chapter 49.17 RCW. 94-15-096 (Order 94-07), § 296-155-365, filed 7/20/94, effective 9/20/94. Statutory Authority: RCW 49.17.040 and 49.17.050. 86-03-074 (Order 86-14), § 296-155-365, filed 1/21/86; Order 74-26, § 296-155-365, filed 5/7/74, effective 6/6/74.]

WAC 296-155-367 Masonry saws.

(1) **Guarding.**

(a) Masonry saws must be guarded by semicircular enclosures over the blade.

(b) A method for retaining blade fragments must be incorporated into the design of the semicircular enclosure.

(2) **Safety latch**. A safety latch must be installed on notched saws to prevent the motor and cutting head assembly from lifting out of the notches.

(3) **Blade speed**. You must maintain blade speed in accordance with the manufacturer's specifications.

(4) **Exhaust and eye protection.**

(a) All table mounted masonry saws must be equipped with a mechanical means of exhausting dust into a covered receptacle or be provided with water on the saw blade for dust control. The operator and any nearby worker must wear appropriate eye protection in accordance with WAC 296-155-215.

(b) All portable hand-held masonry saw operators must wear appropriate eye and respiratory protection in accordance with WAC 296-155-215 and chapter 296-842 WAC.

(5) **Grounding**. The motor frames of all stationary saws must be grounded through conduit, water pipe, or a driven ground. Portable saws must be grounded through 3-pole cords attached to grounded electrical systems.

(6) **Inspection**. You must inspect masonry saws at regular intervals and maintained in safe operating condition.

[Statutory Authority: RCW 49.17.010, .040, .050, and .060. 16-09-085 (Order 15-08), § 296-155-367, filed 04/19/16, effective 05/20/16. Statutory Authority: RCW 49.17.010, .040, .050, and .060. 05-03-093 (Order 04-41), § 296-155-367, filed 01/18/05, effective 03/01/05. Statutory Authority: RCW 49.17.010, .040, .050. 99-10 (Order 98-10), § 296-155-367, filed 05/04/99, effective 09/01/99. Statutory Authority: Chapter 49.17 RCW. 90-17-051 (Order 90-10), § 296-155-367, filed 8/13/90, effective 9/24/90. Statutory Authority: RCW 49.17.040 and 49.17.050. 86-03-074 (Order 86-14), § 296-155-367, filed 1/21/86.]

WAC 296-155-370 Woodworking tools.

(1) **Speeds**. You must not operate any saw in excess of the manufacturers recommended speed.

(2) **Guarding**. All portable, hand held power-driven circular saws must be equipped with guards above and below the base plate or shoe. The upper guard must cover the saw to the depth of the teeth, except for the minimum arc required to permit the base to be tilted for bevel cuts. The lower guard must cover the saw to the depth of the teeth, except for the minimum arc required to allow proper retraction and contact with the work. When the tool is withdrawn from the work, the lower guard must automatically and instantly return to the covering position.

(3) Hand-fed table saws.

(a) Each circular hand-fed table saw must be provided with a hood-type guard that will cover the blade at all times when the blade is not in use. This may be accomplished by the use of a guard that will automatically adjust to the thickness of the material being cut, or by a fixed or manually adjusted guard. If a fixed or manually adjusted guard is used, the space between the bottom of the guard and the material being cut must not exceed 3/8 inch if 1-1/2 inches or more from the blade, and 1/4 inch if closer than 1-1/2 inches.

(b) When the blade is in use, the hood-type guard must enclose that portion of the blade above the material.

(c) Hood-type guards must be so designed and constructed as to resist blows and strains incidental to reasonable operation, adjusting, and handling, in order to protect the operator from flying splinters and broken saw teeth.

(d) The hood must be so mounted as to ensure that its operation will be positive, reliable, and in alignment with the saw. The mounting must be adequate to resist any reasonable side thrust or other force that would disrupt alignment.

(e) Where a hood-type guard cannot be used because of unusual shapes or cuts, you must use a jig or fixture that will provide equal safety for the operator. On the completion of such operations, you must immediately replace the guard.

(f) You must use a push stick on short or narrow stock when there is a possibility of the hand contacting the cutting tool.

(g) Each hand-fed circular ripsaw must be equipped with a spreader to minimize the possibility of material squeezing the saw or of material kickbacks. The spreader must be made of tempered steel, or its equivalent, and must be slightly thinner than the saw kerf. It must be of sufficient width to provide adequate stiffness or rigidity to resist any reasonable side thrust or blow tending to bend or throw it out of position. The spreader must be attached so that it will remain in true alignment with the blade, even when either the saw or table is tilted, and should be placed so that there is not more than 1/2-inch space between the spreader and the back of the blade when the recommended saw blade is in its maximum “up” position. If a blade smaller than the maximum permissible size is used, you must move the spreader to within 1/2 inch of the blade. The provision of a spreader in connection with grooving, dadoing, or rabbeting is not required. On the completion of such operations, you must immediately replace the spreader.

(h) Each hand-fed circular ripsaw must be provided with antikickback devices so located as to oppose the thrust or tendency of the saw blade to pick up the material or throw it back toward the operator. These devices must be designed to provide holding power for all the thicknesses of material being cut.

(4) Radial saws.

(a) Hoods and guards. Each saw must be provided with a device that will completely enclose the upper portion of the blade down to a point that includes the end of the saw arbor. The upper hood must be so constructed as to protect the operator from flying splinters and broken saw teeth, and to deflect sawdust away from the operator. The sides of the lower exposed portion of the saw blade must be guarded from the tips of the blade teeth inward radially with no greater than 3/8-inch gullet exposure. The device must automatically adjust itself to the thickness of the stock and remain in contact with the stock being cut for the 90° blade positions (0° bevel) throughout the full working range of miter position. A permanent label not less than 1-1/2 inches X 3/4 inch must be affixed to the guard visible from the normal operating position, reading as follows:

WARNING: TO AVOID INJURY, SHUT OFF POWER BEFORE CLEANING A JAMMED LOWER GUARD

Such a label must be colored standard danger red or orange in accordance with American National Standard Safety Color Code for Marking Physical Hazards, Z53.1-1979.

(b) Spreaders. When radial saws are used for ripping, a spreader must be provided and must be aligned with the saw blade.

(c) Antikickback devices. You must use antikickback devices located on both sides of the saw blade on the outfeed side, so as to oppose the thrust or tendency of the blade to pick up the material or to throw it back toward the operator, on each radial saw used for ripping. These devices must be designed to provide adequate holding power for all the thicknesses of material being cut.

(d) Adjustable stops and return devices. An adjustable stop must be provided to prevent the forward travel of the blade beyond the position necessary to complete the cut. A limit chain or other equally effective device must be provided to prevent the saw blade from sliding beyond the edge of the table; or the table must be extended to eliminate over-run.

(e) On any manually operated saw, installation must be such that the front of the machine is slightly higher than the rear, or some other means must be provided so that the cutting head will not roll or move out on the arm away from the column as a result of gravity or vibration. A permanent label not less than 1-1/2 inches X 3/4 inch must be affixed to the cutting head visible from the normal crosscut operating position, reading as follows:

WARNING: TO AVOID INJURY, RETURN CARRIAGE TO THE FULL REAR POSITION AFTER EACH CROSSCUT TYPE OF OPERATION

Such a label must be colored standard caution yellow in accordance with American National Standard Z53.1-1979.

(f) Direction of feed. Ripping and ploughing must be against the direction in which the saw blade turns. The direction of the saw blade rotation must be conspicuously marked on the hoods. In addition, a permanent label not less than 1-1/2 inches X 3/4 inch must be affixed to the end of the guard at which the blade teeth exit the upper guard during operation. The label must be at approximately the level of the arbor and must read as follows:

DANGER: TO AVOID INJURY, DO NOT FEED MATERIAL INTO CUTTING TOOL FROM THIS END

Such a label must be colored standard red or orange in accordance with American National Standard, Z53.1-1979.

(5) All woodworking tools and machinery must meet any other applicable requirements of American National Standards Institute , 01.1-1997, Safety Code for Woodworking Machinery.

(6) The control switch on all stationary radial arm saws must be placed at the front of the saw or table and must be properly recessed or hooded to prevent accidental contact.

(a) You must provide a firm level working area at the front of all stationary radial arm saws. You must keep the area free of all stumbling hazards.

(b) You must use a push stick or similar device must be used for pushing short material through power saws.

(7) **Circular power miter saws**. The requirements of subsection (4)(a) of this section applies to guarding circular power miter saws.

(8) **Personal protective equipment**. All personal protective equipment required for use must conform to the requirements of Part C of this chapter.

[Statutory Authority: RCW 49.17.010, .040, .050, and .060. 16-09-085 (Order 15-08), § 296-155-370, filed 04/19/16, effective 05/20/16. Statutory Authority: Chapter 49.17 RCW. 89-11-035 (Order 89-03), § 296-155-370, filed 5/15/89, effective 6/30/89. Statutory Authority: RCW 49.17.040 and 49.17.050. 86-03-074 (Order 86-14), § 296-155-370, filed 1/21/86; Order 74-26, § 296-155-370, filed 5/7/74, effective 6/6/74.]

WAC 296-155-375 Jacks-Lever and ratchet, screw, and hydraulic.

General requirements.

(1) The manufacturer's rated capacity must be legibly marked on all jacks and you must not exceed this capacity.

(2) All jacks must have a positive stop to prevent over-travel.

(3) Specially designed jacks constructed for specific purposes must meet the approval of the department of labor and industries before being placed in service.

(4) Control parts must be so designed that the operator will not be subjected to hazard.

(5) **Blocking**. When it is necessary to provide a firm foundation, you must block or crib the base of the jack. Where there is a possibility of slippage of the metal cap of the jack, you must place a wood block between the cap and the load.

(6) **Operation and maintenance.**

(a) After the load has been raised, you must immediately crib, block, or otherwise secure it.

(b) You must supply hydraulic jacks exposed to freezing temperatures with an adequate antifreeze liquid.

(c) You must properly lubricate all jacks at regular intervals. You should follow the lubricating instructions of the manufacturer, and only lubricants recommended by the manufacturer should be used.

(7) You must thoroughly inspect each jack at times which depend upon the service conditions. You must perform inspections at least as frequently as the following:

(a) For constant or intermittent use at one locality, once every 6 months;

(b) For jacks sent out of shop for special work, when sent out and when returned;

(c) For a jack subjected to abnormal load or shock, immediately before and immediately thereafter.

(8) You must examine repair or replacement parts for possible defects.

(9) You must tag jacks which are out of order accordingly, and you must not use them until repairs are made.

[Statutory Authority: RCW 49.17.010, .040, .050, and .060. 16-09-085 (Order 15-08), § 296-155-375, filed 04/19/16, effective 05/20/16. Statutory Authority: Chapter 49.17 RCW. 94-15-096 (Order 94-07), § 296-155-375, filed 7/20/94, effective 9/20/94; 93-04-111 (Order 92-15), § 296-155-375, filed 2/3/93, effective 3/15/93; 91-11-070 (Order 91-01), § 296-155-375, filed 5/20/91, effective 6/20/91; Order 74-26, § 296-155-375, filed 5/7/74, effective 6/6/74.]

WAC 296-155-380 Air receivers.

(1) **Application**. This section applies to compressed air receivers, and other equipment used in providing and utilizing compressed air for performing operations such as cleaning, drilling, hoisting, and chipping. On the other hand, however, this section does not deal with the special problems created by using compressed air to convey materials nor the problems created when persons work in compressed air as in tunnels and caissons. These standards are not intended to apply to compressed air machinery and equipment used on transportation vehicles such as steam railroad cars, electric railway cars, and automotive equipment.

(2) **New and existing equipment.**

(a) All new air receivers installed after the effective date of these standards must be constructed in accordance with the 1968 Edition of the A.S.M.E. Boiler and Pressure Vessel Code, section VIII.

(b) All safety valves used must be constructed, installed, and maintained in accordance with the A.S.M.E. Boiler and Pressure Vessel Code, section VIII Edition 1968.

(3) **Installation**. Air receivers must be so installed that all drains, handholes, and manholes therein are easily accessible. Air receivers should be supported with sufficient clearance to permit a complete external inspection and to avoid corrosion of external surfaces. Under no circumstances must an air receiver be buried underground or located in an inaccessible place. The receiver should be located as close to the compressor or after-cooler as is possible in order to keep the discharge pipe short.

(4) **Drains and traps**. All air receivers having an internal and external operating pressure exceeding 15 psi with no limitation on size, and air receivers having an inside diameter exceeding 6 inches, with no limitation on pressure, if subject to corrosion, must be supplied with a drain pipe and valve at the lowest point in the vessel; or a pipe may be used extending inward from any other location to within 1/4 inch of the lowest point. Adequate automatic traps may be installed in addition to drain valves. The drain valve on the air receiver must be opened and the receiver completely drained frequently and at such intervals as to prevent the accumulation of oil and water in the receiver.

(5) **Gages and valves.**

(a) Every air receiver must be equipped with an indicating pressure gage (so located as to be readily visible) and with one or more spring-loaded safety valves. The total relieving capacity of such safety valves must be such as to prevent pressure in the receiver from exceeding the maximum allowable working pressure of the receiver by more than 10%.

(b) You must not place any valve of any type between the air receiver and its safety valve or valves.

(c) Safety appliances, such as safety valves, indicating devices and controlling devices, must be constructed, located, and installed so that they cannot be readily rendered inoperative by any means, including the elements.

(d) You must test all safety valves frequently and at regular intervals to determine whether they are in good operating condition.

[Statutory Authority: RCW 49.17.010, .040, .050, and .060. 16-09-085 (Order 15-08), § 296-155-380, filed 04/19/16, effective 05/20/16. Statutory Authority: Chapter 49.17 RCW. 94-15-096 (Order 94-07), § 296-155-380, filed 7/20/94, effective 9/20/94.]

PART H
WELDING AND CUTTING

LAST UPDATED: 05/20/2016

WAC 296-155-400 Gas welding and cutting. 1

WAC 296-155-405 Arc welding and cutting. 4

WAC 296-155-407 Protective clothing. 6

WAC 296-155-410 Fire prevention. 7

WAC 296-155-415 Ventilation and protection in welding, cutting, and heating. 8

WAC 296-155-420 Welding, cutting, and heating in way of preservative coatings. 10

WAC 296-155-400 Gas welding and cutting.

(1) **Transporting, moving, and storing compressed gas cylinders.**

(a) You must ensure that valve protection caps are in place and secured.

(b) When cylinders are hoisted, you must secure them on a cradle, slingboard, or pallet. You must not hoist or transport them by means of magnets or choker slings.

(c) You must move cylinders by tilting and rolling them on their bottom edges. You must not intentionally drop, strike, or permit them to strike each other violently.

(d) When cylinders are transported by powered vehicles, you must secure them in a vertical position.

(e) You must not use valve protection caps for lifting cylinders from one vertical position to another. You must not use bars under valves or valve protection caps to pry cylinders loose when frozen. You must use warm, not boiling, water to thaw cylinders loose.

(f) Unless cylinders are firmly secured on a special carrier intended for this purpose, you must remove regulators and put valve protection caps in place before cylinders are moved.

(g) You must use a suitable cylinder truck, chain, or other steadying device to keep cylinders from being knocked over while in use. Such cylinders are not considered to be "in storage."

(h) When a job is finished, when cylinders are empty or when cylinders are moved at any time, you must close the cylinder valve.

(i) You must secure compressed gas cylinders in an upright position at all times except, if necessary, for short periods of time while cylinders are actually being hoisted or carried.

(j) Oxygen. You must separate oxygen cylinders in storage from fuel-gas cylinders or combustible materials (especially oil or grease), a minimum distance of 20 feet or by a noncombustible barrier at least 5 feet high having a fire-resistance rating of at least 1/2 hour.

(2) **Placing cylinders.**

(a) You must keep cylinders far enough away from the actual welding or cutting operation so that sparks, hot slag, or flame will not reach them. When this is impractical, fire resistant shields must be provided.

(b) You must place cylinders where they cannot become part of an electrical circuit. You must not strike electrodes against a cylinder to strike an arc.

(c) You must place fuel gas cylinders with valve end up whenever they are in use. You must place them in a location where they would be subject to open flame, hot metal, or other sources of artificial heat.

(d) You must not take cylinders containing oxygen or acetylene or other fuel gas into confined spaces.

(3) **Treatment of cylinders.**

(a) You must not use cylinders, whether full or empty, as rollers or supports.

(b) No person other than the gas supplier is permitted to attempt to mix gases in a cylinder. No one except the owner of the cylinder or person authorized by the owner, is permitted to refill a cylinder. No one is permitted to use a cylinder's contents for purposes other than those intended by the supplier. All cylinders used must meet the department of transportation requirements, Specification for Cylinders, (49 CFR Part 178, Subpart C).

(c) You must not use any damaged or defective cylinder.

(4) **Use of fuel gas**. You must thoroughly instruct employees in the safe use of fuel gas, as follows:

(a) Before a regulator to a cylinder valve is connected, you must open the valve slightly and close it immediately. (This action is generally termed “cracking” and is intended to clear the valve of dust or dirt that might otherwise enter the regulator.) The person cracking the valve must stand to one side of the outlet, not in front of it. You must not crack the valve of a fuel gas cylinder where the gas would reach welding work, sparks, flame, or other possible sources of ignition.

(b) You must always open the cylinder valve slowly to prevent damage to the regulator. For quick closing, you must not open valves on fuel gas cylinders more than 1 1/2 turns. When a special wrench is required, you must leave it in position on the stem of the valve while the cylinder is in use so that the fuel gas flow can be shut off quickly in case of an emergency. In the case of manifolded or coupled cylinders, at least one such wrench must always be available for immediate use. You must not place anything on top of a fuel gas cylinder, when in use, which may damage the safety device or interfere with the quick closing of the valve.

(c) You must not use fuel gas from cylinders through torches or other devices which are equipped with shutoff valves without reducing the pressure through a suitable regulator attached to the cylinder valve or manifold.

(d) Before a regulator is removed from a cylinder valve, you must always close the cylinder valve and release the gas from the regulator.

(e) If, when the valve on a fuel gas cylinder is opened, there is found to be a leak around the valve stem, you must close and tighten the gland nut. If this action does not stop the leak, you must discontinue the use of the cylinder, and you must properly tag and remove it from the work area. In the event that fuel gas should leak from the cylinder valve, rather than from the valve stem, and the gas cannot be shut off, you must properly tag and remove the cylinder from the work area. If a regulator attached to a cylinder valve will effectively stop a leak through the valve seat, the cylinder need not be removed from the work area.

(f) If a leak should develop at a fuse plug or other safety device, you must remove the cylinder from the work area.

(g) Cylinders not having fixed hand wheels must have keys, handles, or nonadjustable wrenches on valve stems while in service. In multiple cylinder installations one and only one key or handle is required for each manifold.

(5) **Fuel gas and oxygen manifolds.**

(a) Fuel gas and oxygen manifolds must bear the name of the substance they contain in letters at least 1-inch high which must be either painted on the manifold or on a sign permanently attached to it.

(b) You must place fuel gas and oxygen manifolds in safe, well ventilated, and accessible locations. You must not locate them within closed spaces..

(c) Manifold hose connections, including both ends of the supply hose that lead to the manifold, must be such that the hose cannot be interchanged between fuel gas and oxygen manifolds and supply header connections. You must not use adapters to permit the interchange of hose. You must keep hose connections free of grease and oil.

(d) When not in use, you must cap manifold and header hose connections.

(e) You must not place anything on top of a manifold, when in use, which will damage the manifold or interfere with the quick closing of the valves.

(6) **Hose.**

(a) Fuel gas hose and oxygen hose must be easily distinguishable from each other. The contrast may be made by different colors or by surface characteristics readily distinguishable by the sense of touch. Oxygen and fuel gas hoses must not be interchangeable. You must not use a single hose having more than one gas passage.

(b) When parallel sections of oxygen and fuel gas hose are taped together, you must not cover more than 4 inches out of 12 inches by tape.

(c) You must inspect all hose in use, carrying acetylene, oxygen, natural or manufactured fuel gas, or any gas or substance which may ignite or enter into combustion, or be in any way harmful to employees, at the beginning of each working shift. You must remove defective hose from service.

(d) You must test hose which has been subject to flashback, or which shows evidence of severe wear or damage, to twice the normal pressure to which it is subject, but in no case less than 300 p.s.i. You must not use defective hose, or hose in doubtful condition.

(e) Hose couplings must be of the type that cannot be unlocked or disconnected by means of a straight pull without rotary motion.

(f) Boxes used for the storage of gas hose must be ventilated.

(g) You must keep hoses, cables, and other equipment clear of passageways, ladders and stairs.

(7) **Torches.**

(a) You must clean clogged torch tip openings with suitable cleaning wires, drills, or other devices designed for such purpose.

(b) You must inspect torches in use at the beginning of each working shift for leaking shutoff valves, hose couplings, and tip connections. You must not use defective torches.

(c) You must light a torches by friction lighters or other approved devices, and not by matches or from hot work.

(8) **Regulators and gauges**. Oxygen and fuel gas pressure regulators, including their related gauges, must be in proper working order while in use.

(9) **Oil and grease hazards**. You must keep oxygen cylinders and fittings away from oil or grease. You must keep cylinders, cylinder caps and valves, couplings, regulators, hose, and apparatus free from oil or greasy substances and you must handle them with oily hands or gloves. You must not direct oxygen at oily surfaces, greasy clothes, or within a fuel oil or other storage tank or vessel.

(10) **Additional rules**. For additional details not covered in this Part, applicable portions of American National Standards Institute, Z49.1-1973, Safety in Welding and Cutting, applies.

You must also are protect employees from exposure to hexavalent chromium during the stainless steel welding process. See WAC 296-62-08003, Hexavalent chromium for specific criteria.

[Statutory Authority: RCW 49.17.010, .040, .050, and .060. 16-09-085 (Order 15-08). § 296-155-400, filed 04/19/16, effective 05/20/16. Statutory Authority: RCW 49.17.010, .040, .050, and .060. 06-16-106 (Order 06-13), § 296-155-400, filed 08/12/06, effective 09/01/06. Statutory Authority: Chapter 49.17 RCW. 94-15-096 (Order 94-07), § 296-155-400, filed 7/20/94, effective 9/20/94. Statutory Authority: RCW 49.17.040 and 49.17.050. 86-03-074 (Order 86-14), § 296-155-400, filed 1/21/86; Order 74-26, § 296-155-400, filed 5/7/74, effective 6/6/74.]

WAC 296-155-405 Arc welding and cutting.

(1) **Manual electrode holders.**

(a) You must only use manual electrode holders which are specifically designed for arc welding and cutting, and are of a capacity capable of safely handling the maximum rated current required by the electrodes.

(b) Any current-carrying parts passing through the portion of the holder which the arc welder or cutter grips in the hand, and the outer surfaces of the jaws of the holder, must be fully insulated against the maximum voltage encountered to ground.

(2) **Welding cables and connectors.**

(a) All arc welding and cutting cables must be of the completely insulated, flexible type, capable of handling the maximum current requirements of the work in progress, taking into account the duty cycle under which the arc welder or cutter is working.

(b) You must only use cable free from repair or splices for a minimum distance of 10 feet from the cable end to which the electrode holder is connected, except that cables with standard insulated connectors or with splices whose insulating quality is equal to that of the cable are permitted.

(c) When it becomes necessary to connect or splice lengths of cable one to another, you must use substantial insulated connectors of a capacity at least equivalent to that of the cable. If connections are effected by means of cable lugs, you must securely fasten them together to give good electrical contact, and the exposed metal parts of the lugs must be completely insulated.

(d) You must not use cables in need of repair. When a cable, other than the cable lead referred to in subdivision (b) of this subsection, becomes worn to the extent of exposing bare conductors, you must protect the portion thus exposed by means of rubber and friction tape or other equivalent insulation.

(3) **Ground returns and machine grounding.**

(a) A ground return cable must have a safe current carrying capacity equal to or exceeding the specified maximum output capacity of the arc welding or cutting unit which it services. When a single ground return cable services more than one unit, its safe current-carrying capacity must equal or exceed the total specified maximum output capacities of all the units which it services.

(b) You must not use pipelines containing gases or flammable liquids, or conduits containing electrical circuits, as a ground return. For welding on natural gas pipelines, the technical portions of regulations issued by the Department of Transportation, Office of Pipeline Safety, Minimum Federal Safety Standards for Gas Pipelines apply.(49 CFR Part 192, Subpart C.)

(c) When a structure or pipeline is employed as a ground return circuit, you must determine that the required electrical contact exist at all joints. The generation of an arc, sparks, or heat at any point must cause rejection of the structures as a ground circuit.

(d) When a structure or pipeline is continuously employed as a ground return circuit, all joints must be bonded, and you must conduct periodic inspections to ensure that no condition of electrolysis or fire hazard exists by virtue of such use.

(e) You must ground the frames of all arc welding and cutting machines either through a third wire in the cable containing the circuit conductor or through a separate wire which is grounded at the source of the current. You must check grounding circuits, other than by means of the structure, to ensure that the circuit between the ground and the grounded power conductor has resistance low enough to permit sufficient current to flow to cause the fuse or circuit breaker to interrupt the current.

(f) You must inspect all ground connections to ensure that they are mechanically strong and electrically adequate for the required current.

(4) **Operating instructions**. You must instruct employees in the safe means of arc welding and cutting as follows:

(a) When electrode holders are to be left unattended, you must remove the electrodes and place or protect the holders so that they cannot make electrical contact with employees or conducting objects.

(b) You must not dip hot electrode holders in water; to do so may expose the arc welder or cutter to electric shock.

(c) When the arc welder or cutter has occasion to leave work or to stop work for any appreciable length of time, or when the arc welding or cutting machine is to be moved, you must open the power supply switch to the equipment.

(d) Employees must report any faulty or defective equipment to the supervisor.

(e) See WAC 296-155-452 for additional requirements.

(5) **Shielding**. Whenever practical, you must shield all arc welding and cutting operations by noncombustible or flameproof screens which will protect employees and other persons working in the vicinity from the direct rays of the arc.

(6) **Employee protection**. Where welding or cutting operations are being performed in areas where it is possible for molten slag to contact other employees, you must protect those employees from being burned by providing overhead protection, barricading the impact area, or other effective means.

[Statutory Authority: RCW 49.17.010, .040, .050, and .060. 16-09-085 (Order 15-08). § 296-155-405, filed 04/19/16, effective 05/20/16. Statutory Authority: Chapter 49.17 RCW. 94-15-096 (Order 94-07), § 296-155-405, filed 7/20/94, effective 9/20/94; 88-23-054 (Order 88-25), § 296-155-405, filed 11/14/88. Statutory Authority: RCW 49.17.040 and 49.17.050. 86-03-074 (Order 86-14), § 296-155-405, filed 1/21/86; Order 74-26, § 296-155-405, filed 5/7/74, effective 6/6/74.]

WAC 296-155-407 Protective clothing.

(1) **General requirements**. You must protect employees exposed to the hazards created by welding, cutting, or brazing operations by personal protective equipment in accordance with the requirements of chapter 296-800 WAC, chapter 296-24 WAC, Part I, and WAC 296-800-160. Appropriate protective clothing required for any welding operation will vary with the size, nature and location of the work to be performed.

(2) **Specified protective clothing**. Protective means which you may employ are as follows:

(a) Except when engaged in light work, all welders should wear flameproof gauntlet gloves.

(b) Flameproof aprons made of leather, or other suitable material may also be desirable as protection against radiated heat and sparks.

(c) Woolen clothing preferable to cotton because it is not so readily ignited and helps protect the welder from changes in temperature. Cotton clothing, if used, should be chemically treated to reduce its combustibility. All outer clothing such as jumpers or overalls should be reasonably free from oil or grease.

(d) Sparks may lodge in rolled-up sleeves or pockets of clothing, or cuffs of overalls or trousers. It is therefore recommended that sleeves and collars be kept buttoned and pockets be eliminated from the front of overalls and aprons. Trousers or overalls should not be turned up on the outside.

> *Note: For heavy work, fire-resistant leggings, high boots, or other equivalent means should be used.*

(e) In production work a sheet metal screen in front of the worker's legs can provide further protection against sparks and molten metal in cutting operations.

(f) Capes or shoulder covers made of leather or other suitable materials should be worn during overhead welding or cutting operations. Leather skull caps may be worn under helmets to prevent head burns.

(g) Where there is exposure to sharp or heavy falling objects, or a hazard of bumping in confined spaces, you must use hard hats or head protectors.

[Statutory Authority: RCW 49.17.010, .040, .050, and .060. 16-09-085 (Order 15-08). § 296-155-407, filed 04/19/16, effective 05/20/16. Statutory Authority: RCW 49.17.010, .040, .050. 01-11-038 (Order 99-36), § 296-155-407, filed 05/09/01, effective 09/01/01. Statutory Authority: Chapter 49.17 RCW. 95-04-007, § 296-155-407, filed 1/18/95, effective 3/1/95. Statutory Authority: RCW 49.17.040 and 49.17.050. 86-03-074 (Order 86-14), § 296-155-407, filed 1/21/86.]

WAC 296-155-410 Fire prevention.

(1) When practical, you must move objects to be welded, cut, or heated to a designated safe location or, if the object to be welded, cut, or heated cannot be readily moved, you must take all moveable fire hazards in the vicinity to a safe place, or otherwise protected.

(2) If the object to be welded, cut, or heated cannot be moved and if all the fire hazards cannot be removed, you must take positive means to confine the heat, sparks, and slag, and to protect the immovable fire hazards from them.

(3) You must not perform any welding, cutting, or heating where the application of flammable paints, or the presence of other flammable compounds, or heavy dust concentrations creates a hazard.

(4) You must ensure that suitable fire extinguishing equipment is immediately available in the work area and you must maintain it in a state of readiness for instant use.

(5) When the welding, cutting, or heating operation is such that normal fire prevention precautions are not sufficient, you must assign additional personnel to guard against fire while the actual welding, cutting, or heating operation is being performed, and for a sufficient period of time after completion of the work to ensure that no possibility of fire exists. You must instruct such personnel as to the specific anticipated fire hazards and how the firefighting equipment provided is to be used.

(6) When welding, cutting, or heating is performed on walls, floors, and ceilings, since direct penetration of sparks or heat transfer may introduce a fire hazard to an adjacent area, you must take the same precautions on the opposite side as are taken on the side on which the welding is being performed.

(7) For the elimination of possible fire in enclosed spaces as a result of gas escaping through leaking or improperly closed torch valves, you must positively shut off the gas supply to the torch at some point outside the enclosed space whenever the torch is not to be used or whenever the torch is left unattended for a substantial period of time, such as during the lunch period. Overnight and at the change of shifts, you must remove the torch and hose from the confined space. You must immediately remove open end fuel gas and oxygen hoses from enclosed spaces when they are disconnected from the torch or other gas-consuming device.

(8) Except when the contents are being removed or transferred, you must keep drums, pails, and other containers, which contain or have contained flammable liquids, closed. You must remove empty containers to a safe area apart from hot work operations or open flames.

(9) Drums, containers, or hollow structures which have contained toxic or flammable substances must, before welding, cutting, or heating is undertaken on them, either be filled with water or thoroughly cleaned of such substances and ventilated and tested. For welding, cutting and heating on steel pipelines containing natural gas, the pertinent portions of regulations issued by the Department of Transportation, Office of Pipeline Safety, Minimum Federal Safety Standards for Gas Pipelines apply. (49 CFR Part 192, Subpart C.)

(10) Before heat is applied to a drum, container, or hollow structure, you must provide a vent or opening for the release of any built-up pressure during the application of heat.

[Statutory Authority: RCW 49.17.010, .040, .050, and .060. 16-09-085 (Order 15-08). § 296-155-410, filed 04/19/16, effective 05/20/16. Order 74-26, § 296-155-410, filed 5/7/74, effective 6/6/74.]

WAC 296-155-415 Ventilation and protection in welding, cutting, and heating.

(1) **Mechanical ventilation**. For purposes of this section, mechanical ventilation must meet the following requirements:

(a) Mechanical ventilation must consist of either general mechanical ventilation systems or local exhaust systems.

(b) General mechanical ventilation must be of sufficient capacity and so arranged as to produce the number of air changes necessary to maintain welding fumes and smoke within safe limits, as defined in Part B of this chapter.

(c) Local exhaust ventilation must consist of freely movable hoods intended to be placed by the welder or burner as close as practicable to the work. This system must be of sufficient capacity and so arranged as to remove fumes and smoke at the source and keep the concentration of them in the breathing zone within safe limits as defined in Part B of this chapter.

(d) Contaminated air exhausted from a working space must be discharged into the open air or otherwise clear of the source of intake air.

(e) All air replacing that withdrawn must be clean and respirable.

(f) You must not use oxygen for ventilation purposes, comfort cooling, blowing dust from clothing, or for cleaning the work area.

(2) **Welding, cutting, and heating in confined spaces.**

(a) Except as provided in subdivision (b) of this subsection and subdivision (b) of subsection (3) of this section, you must provide either general mechanical or local exhaust ventilation meeting the requirements of subsection (1) of this section whenever welding, cutting, or heating is performed in a confined space.

(b) When sufficient ventilation cannot be obtained without blocking the means of access, you must protect employees in the confined space by air line respirators in accordance with the requirements of Part C of this chapter, and you must assign an employee on the outside of such a confined space to maintain communication with those working within it and to aid them in an emergency.

(3) **Welding, cutting, or heating of metals of toxic significance.**

(a) You must perform welding, cutting, or heating in any enclosed spaces involving the metals specified in this subsection with either general mechanical or local exhaust ventilation meeting the requirements of subsection (1) of this section:

(i) Zinc-bearing base or filler metals or metals coated with zinc-bearing materials.

(ii) Lead base metals;

(iii) Cadmium-bearing filler materials;

(iv) Chromium-bearing metals or metals coated with chromium-bearing materials.

(b) You must perform welding, cutting, or heating in any enclosed spaces involving the metals specified in this subdivision with local exhaust ventilation in accordance with the requirements of subsection (1) of this section, or you must protect employees by air line respirators in accordance with the requirements of Part C of this chapter.

(i) Metals containing lead, other than as an impurity, or metals coated with lead-bearing materials;

(ii) Cadmium-bearing or cadmium-coated base metals;

(iii) Metals coated with mercury-bearing metals;

(iv) Beryllium-containing base or filler metals. Because of its high toxicity, you must perform work involving beryllium with both local exhaust ventilation and air line respirators.

(c) You must protect employees performing such operations in the open air by filter-type respirators in accordance with the requirements of Part C of this chapter, except that you must protect employees performing such operations on beryllium-containing base or filler metals by air line respirators in accordance with the requirements of Part C of this chapter.

(d) You must protect other employees exposed to the same atmosphere as the welders or burners in the same manner as the welder or burner.

(4) **Inert-gas metal-arc welding.**

(a) Since the inert-gas metal-arc welding process involves the production of ultra-violet radiation of intensities of 5 to 30 times that produced during shielded metal-arc welding, the decomposition of chlorinated solvents by ultraviolet rays, and the liberation of toxic fuels and gases, you must not permit employees to engage in, or be exposed to the process until the following special precautions have been taken:

(i) You must keep the use of chlorinated solvents at least 200 feet, unless shielded, from the exposed arc, and surfaces prepared with chlorinated solvents must be thoroughly dry before welding is permitted on such surfaces.

(ii) You must protect employees in the area not protected from the arc by screening by filter lenses meeting the requirements of Part C of this chapter. When two or more welders are exposed to each other's arc, filter lens goggles of a suitable type, meeting the requirements of Part C of this chapter you must wear under welding helmets. You must use hand shields to protect the welder against flashes and radiant energy when either the helmet is lifted or the shield is removed.

(iii) You must suitably protect welders and other employees who are exposed to radiation so that the skin is covered completely to prevent burns and other damage by ultraviolet rays. Welding helmets and hand shields must be free of leaks and openings, and free of highly reflective surfaces.

(iv) When inert-gas metal-arc welding is being performed on stainless steel, you must meet the requirements of subdivision (b) of subsection (3) of this section to protect against dangerous concentrations of nitrogen dioxide.

(5) **General welding, cutting, and heating.**

(a) Welding, cutting, and heating, not involving conditions or materials described in subsections (2), (3), or (4) of this section, may normally be done without mechanical ventilation or respiratory protective equipment, but where, because of unusual physical or atmospheric conditions, an unsafe accumulation of contaminants exists, you must provide suitable mechanical ventilation or respiratory protective equipment.

(b) You must protect employees performing any type of welding, cutting, or heating by suitable eye protective equipment in accordance with the requirements of Part C of this chapter.

[Statutory Authority: RCW 49.17.010, .040, .050, and .060. 16-09-085 (Order 15-08). § 296-155-415, filed 04/19/16, effective 05/20/16. Order 74-26, § 296-155-415, filed 5/7/74, effective 6/6/74.]

WAC 296-155-420 Welding, cutting, and heating in way of preservative coatings.

(1) Before welding, cutting, or heating is commenced on any surface covered by a preservative coating whose flammability is not known, a test must be made by a competent person to determine its flammability. You must consider preservative coatings to be highly flammable when scrapings burn with extreme rapidity.

(2) You must take precautions to prevent ignition of highly flammable hardened preservative coatings. When coatings are determined to be highly flammable, you must strip them from the area to be heated to prevent ignition.

(3) **Protection against toxic preservative coatings:**

(a) In enclosed spaces, you must strip all surfaces covered with toxic preservatives of all toxic coatings for a distance of at least 4 inches from the area of heat application, or you must protect the employees by air line respirators, meeting the requirements of Part C of this chapter.

(b) In the open air, you must protect employees by a respirator, in accordance with requirements of Part C of this chapter.

(4) You must remove the preservative coatings a sufficient distance from the area to be heated to ensure that the temperature of the unstripped metal will not be appreciably raised. Artificial cooling of the metal surrounding the heating area may be used to limit the size of the area required to be cleaned.

[Statutory Authority: RCW 49.17.010, .040, .050, and .060. 16-09-085 (Order 15-08). § 296-155-420, filed 04/19/16, effective 05/20/16. Order 74-26, § 296-155-420, filed 5/7/74, effective 6/6/74.]

PART I
ELECTRICAL

LAST UPDATED: 05/20/2016

WAC 296-155-426 Introduction. 1

WAC 296-155-428 General requirements. 1

WAC 296-155-429 Lockout and tagging of circuits. 8

WAC 296-155-432 Maintenance of equipment. 10

WAC 296-155-434 Environmental deterioration of equipment.11

WAC 296-155-437 Batteries and battery charging. 11

WAC 296-155-441 Applicability. 12

WAC 296-155-444 General requirements. 12

WAC 296-155-447 Wiring design and protection. 18

WAC 296-155-449 Wiring methods, components, and equipment for general use. 28

WAC 296-155-452 Specific purpose equipment and installations. 37

WAC 296-155-456 Hazardous (classified) locations. 39

WAC 296-155-459 Special systems. 41

WAC 296-155-462 Definitions applicable to this part..... 45

WAC 296-155-426 Introduction.

This part addresses electrical safety requirements that are necessary for the practical safeguarding of employees involved in construction work and is divided into 4 major divisions and applicable definitions as follows:

(1) **Introduction and definitions**. Definitions applicable to this part are contained in WAC 296-155-462.

(2) **Installation safety requirements**. Installation safety requirements are contained in WAC 296-155-441 through 296-155-459. Included in this category are electric equipment and installations used to provide electric power and light on job sites.

(3) **Safety-related work practices**. Safety-related work practices are contained in WAC 296-155-428 and 296-155-429. In addition to covering the hazards arising from the use of electricity at job sites, these regulations also cover the hazards arising from the accidental contact, direct or indirect, by employees with all energized lines, above or below ground, passing through or near the job site.

(4) **Safety-related maintenance and environmental considerations**. Safety-related maintenance and environmental considerations are contained in WAC 296-155-432 and 296-155-434.

(5) **Safety requirements for special equipment**. Safety requirements for special equipment are contained in WAC 296-155-437.

[Statutory Authority: RCW 49.17.010, .040, .050, and .060. 16-09-085 (Order 15-08), § 296-155-426, filed 04/19/16, effective, 05/20/16. Statutory Authority: Chapter 49.17 RCW. 88-11-021 (Order 88-04), § 296-155-426, filed 5/11/88.]

WAC 296-155-428 General requirements.

(1) **Protection of employees.**

(a) You must not permit an employee to work in such proximity to any part of an electric power circuit that the employee could contact the electric power circuit in the course of work, unless the employee is protected against electric shock by deenergizing the circuit and grounding it or by guarding it effectively by insulation or other means.

(b) You must not require or permit any employee to perform any function in proximity to electrical conductors or to engage in any excavation, construction, demolition, repair, or other operation, unless and until danger from accidental contact with said electrical conductors has been effectively guarded by deenergizing the circuit and grounding it or by guarding it by effective insulation or other effective means.

(c) In work areas where the exact location of underground electric powerlines is unknown, you must not begin any activity which may bring employees into contact with those powerlines until the powerlines have been positively and unmistakably deenergized and grounded.

(d) Before work is begun you must ascertain by inquiry or direct observation, or by instruments, whether any part of an energized electric power circuit, exposed or concealed, is so located that the performance of the work may bring any person, tool, or machine into physical or electrical contact with the electric power circuit. You must post and maintain proper warning signs where such a circuit exists. You must advise employees of the location of such lines, the hazards involved, and the protective measures to be taken.

(e) You must not perform any work, nor are you permitted to pile, store, or otherwise handle any material, nor are you permitted to erect or dismantle any scaffolding, commercial signs, or structures, nor are you permitted to operate any tools, machinery or equipment within the specified minimum distances from any energized high voltage electrical conductor capable of energizing the material or equipment; except where the electrical distribution and transmission lines have been deenergized and visibly grounded at point of work, or where insulating barriers not a part of or an attachment to the equipment have been erected, to prevent physical contact with the lines, you must operate equipment proximate to, under, over, by, or near energized conductors only in accordance with the following:

(i) For lines rated 50 kV. or below, minimum clearance between the lines and any part of the equipment or load must be 10 feet.

(ii) For lines rated over 50 kV. Minimum clearance between the lines and any part of the equipment or load must be 10 feet plus 0.4 inch or each 1 kV. over 50 kV., or twice the length of the line insulator but never less than 10 feet.

(f) Work on energized equipment. Only qualified persons are permitted to work on electric circuit parts of equipment that have not been deenergized under the procedures of WAC 296-155-429(4). Such persons must be capable of working safely on energized circuits and must be familiar with the proper use of special precautionary techniques, personal protective equipment, insulating and shielding materials, and insulated tools.

(g) Overhead electric lines. Where overhead electric conductors are encountered in proximity to a work area, you must be responsible for:

(i) Ascertaining the voltage and minimum clearance distance required; and

(ii) Maintaining the minimum clearance distance; and

(iii) Ensuring that the requirements of this section are complied with.

(h) If relocation of the electrical conductors is necessary, you must make arrangements with the owners of the lines for such relocation.

(i) Barriers.

(i) Barriers must be of such character and construction as to effectively provide the necessary protection without creating other hazards or jeopardizing the operation of the electrical circuits.

(ii) You must only install barriers within the 10 feet clearance from conductors under the supervision of authorized and qualified persons and this must include a representative of the electrical utility or owner involved.

(j) Exceptions.

(i) These rules do not apply to the construction, reconstruction, operation, and maintenance, of overhead electrical lines, structures, and associated equipment by authorized and qualified electrical workers.

(ii) These rules do not apply to authorized and qualified employees engaged in the construction, reconstruction, operation, and maintenance, of overhead electrical circuits or conductors and associated equipment of rail transportation systems or electrical generating, transmission, distribution and communication systems which are covered by chapters 296-45 and 296-32 WAC.

(k) You must take special precautions.

(i) When handling any winch lines, guy wires, or other free cable, wire or rope in the vicinity of any electrical conductors.

(ii) When pulling a winch line, or other cable or rope under energized electrical conductors from a boom, mast, pile driver, etc., in such a manner as to make possible an approach to within 10 feet of a conductor.

(iii) When there is possibility of a winch line, cable, etc., either becoming disconnected or breaking under load because of excessive strain and flipping up into overhead conductors.

(iv) When placing steel, concrete reinforcement, wire mesh, etc.

(v) When handling pipe or rod sections in connection with digging wells or test holes.

(vi) When moving construction equipment, apparatus, machinery, etc., all such movements must avoid striking supporting structures, guy wires, or other elements of the electrical utility system causing the conductors to so swing or move as to decrease clearances to less than 10 feet from construction equipment, or to cause them to come together.

(l) Warning sign required.

(i) You must post and maintain approved durable warning sign legible at 12 feet, reading “It is unlawful to operate this equipment within 10 feet of electrical conductors” in plain view of the operator at the controls of each crane, derrick, shovel, drilling rig, pile driver or similar apparatus which is capable of vertical, lateral or swinging motion.

(ii) You must install a similar sign on the outside of the equipment and located as to be readily visible to mechanics or other persons engaged in the work operation.

(iii) Signs must be not less than 6" x 8" dimensions with the word “WARNING” or “DANGER” in large letters and painted red across the top and the other letters in black painted on yellow background.

(m) You must consider any overhead wire to be an energized line until the owner of such line or the electrical utility authorities indicate that it is not an energized line and it has been visibly grounded.

(2) **Passageways and open spaces.**

(a) You must provide barriers or other means of guarding to ensure that workspace for electrical equipment will not be used as a passageway during periods when energized parts of electrical equipment are exposed.

(b) You must keep working spaces, walkways, and similar locations clear of cords so as not to create a tripping hazard to employees.

(3) **Load ratings**. In existing installations, you must not make any changes in circuit protection to increase the load in excess of the load rating of the circuit wiring.

(4) **Fuses**. When fuses are installed or removed with one or both terminals energized, you must use special tools insulated for the voltage.

(5) **Cords and cables.**

(a) You must not use work or frayed electric cords or cables.

(b) You must not fasten extension cords with staples, hang them from nails, or suspend them by wire.

(6) **Interlocks**. Only a qualified person following the requirements of this section may defeat an electrical safety interlock, and then only temporarily while they are working on the equipment. The interlock systems must be returned to its operable condition when this work is completed.

(7) **Portable electric equipment-Handling**. You must handle portable equipment in a manner which will not cause damage. You must not use flexible electric cords connected to equipment for raising or lowering the equipment. You must not fasten flexible cords with staples or otherwise hang them in such a fashion as could damage the outer jacket or insulation.

(8) **Visual inspection**. When an attachment plug is to be connected to a receptacle (including any on a cord set), you must first check the relationship of the plug and receptacle contacts to ensure they are of proper mating configurations.

(9) **Connecting attachment plugs.**

(a) Your hands must not be wet when plugging and unplugging flexible cords and cord- and plug-connected equipment, if energized equipment is involved.

(b) You must only handle energized plug and receptacle connections with insulating protective equipment if the condition of the connection could provide a conducting path to the employee's hand (if, for example, a cord connector is wet from being immersed in water).

(c) You must properly secure locking-type connectors after connection.

(10) **Routine opening and closing circuits**. You must use load rated switches, circuit breakers, or other devices specifically designed as disconnecting means for the opening, reversing, or closing of circuits under load conditions. You must not use cable connectors not of the load-break type, fuses, terminal lugs, and cable splice connections for such purposes, except in an emergency.

(11) **Reclosing circuits after protective device operation**. After a circuit is deenergized by a circuit protective device, you must not manually reenergize the circuit until it has been determined that the equipment and circuit can be safety energized. This repetitive manual reclosing of circuit breakers or reenergizing circuits through replaced fuses is prohibited.

> *Note: When it can be determined from the design of the circuit and the overcurrent devices involved that the automatic operation of a device was caused by an overload rather than a fault connection, no examination of the circuit or connected equipment is needed before the circuit is reenergized.*

(12) **Test instruments and equipment-Use**. Only qualified persons must perform testing work on electric circuits or equipment.

(13) **Visual inspection**. You must visually inspect test instruments and equipment and all associated test leads, cables, power cords, probes, and connectors for external defects and damage before the equipment is used. If there is a defect or evidence of damage that might expose an employee to injury, you must remove the defective or damaged item from service, and you must ensure that no employee uses it until necessary repairs and tests to render the equipment safe have been made.

(14) **Rating of equipment**. Test instruments and equipment and their accessories must be rated for the circuits and equipment to which they will be connected and must be designed for the environment in which they will be used.

(15) **Occasional use of flammable or ignitible materials**. Where flammable materials are present only occasionally, you must not use electric equipment capable of igniting them unless measures are taken to prevent hazardous conditions from developing. Such materials include, but are not limited to: Flammable gases, vapors, or liquids; combustible dust; and ignitible fibers or flyings.

(16) **Work on energized equipment**. Only qualified persons must work on electric circuit parts of equipment that have not been deenergized under the procedures of WAC 296-155-429(4). Such persons must be capable of working safely on energized circuits and must be familiar with the proper use of special precautionary techniques, personal protective equipment, insulating and shielding materials, and insulated tools.

(17) **Overhead lines**. If work is to be performed near overhead lines, you must deenergize and ground the lines, or you must provide other protective measures before work is started. If the lines are to be deenergized, you must make arrangements with the person or organization that operates or controls the electric circuits involved to deenergize and ground them. If protective measures, such as guarding, isolating, or insulating, these precautions must prevent employees from contacting such lines directly with any part of their body or indirectly through conductive materials, tools, or equipment.

(18) **Unqualified persons**. When an unqualified person is working in an elevated position, or on the ground, near overhead lines, the location must be such that the person and the longest conductive object they may contact cannot come closer to any unguarded, energized overhead line than the following distances:

(a) For voltages to ground 50kV or below-10 ft.;

(b) For voltages to ground over 50kV-10 ft. plus 0.4 inch for every 1kV over 50kV.

(19) **Qualified persons**. When a qualified person is working in the vicinity of overhead lines, whether in an elevated position or on the ground, the person must not approach or take any conductive object without an approved insulating handle closer to exposed energized parts that are shown in subsection (1)(e) of this section unless:

(a) The person is insulated from the energized part (gloves, with sleeves if necessary), rated for the voltage involved are considered to be insulation of the person from the energized part on which work is performed; or

(b) The energized part is insulated both from all other conductive objects at a different potential and from the person; or

(c) The person is insulated from all conductive objects at a potential different from that of the energized part.

(20) **Vehicular and mechanical equipment.**

(a) You must operate any vehicle or mechanical equipment capable of having parts of its structure elevated near energized overhead lines so that a clearance of 10 ft. is maintained. If the voltage is higher than 50kV, you must increase the clearance 0.4 inch for every 1kV over the voltage. However, under any of the following conditions, the clearance may be reduced:

(i) If the vehicle is in transit with its structure lowered, the clearance may be reduced to 4 ft. If the voltage is higher than 50kV, you must increase the clearance 0.4 inch for every 1kV over that voltage.

(ii) If insulating barriers are installed to prevent contact with the lines, and if the barriers are rated for the voltage of the line being guarded and are not a part of or an attachment to the vehicle or its raised structure, the clearance may be reduced to a distance within the designed working dimensions of the insulating barrier.

(b) If the equipment is an aerial lift insulated for the voltage involved, and if the work is performed by a qualified person, the clearance (between the uninsulated portion of the aerial lift and the power line) may be reduced to the distance given in (a) through (d) of this subsection.

(c) Employees standing on the ground must not contact the vehicle or mechanical equipment or any of its attachments, unless:

(i) The employee is using protective equipment rated for the voltage; or

(ii) The equipment is located so that no uninsulated part of its structure (that portion of the structure that provides a conductive path to employees on the ground) can come closer to the line than permitted in this section.

(d) If any vehicle or mechanical equipment capable of having parts of its structure elevated near energized overhead lines is of grounding must not stand at the grounding location whenever there is a possibility of overhead line contact. You must take additional precautions, such as the use of barricades or insulation, to protect employees from hazardous ground potentials, depending on earth resistivity and fault currents, which can develop within the first few feet or more outward from the grounding point.

(21) **Illumination.**

(a) Employees must not enter spaces containing exposed energized parts, unless illumination is provided that enables the employees to perform the work safely.

(b) Where lack of illumination or an obstruction precludes observation of the work to be performed, employees must not perform tasks near exposed energized parts. Employees must not reach blindly into areas which may contain energized parts.

(22) Confined or enclosed space (such as a manhole or vault) that contains exposed energized parts, you must provide, and the employee must use, protective shields, protective barriers, or insulating materials as necessary to avoid inadvertent contact with these parts. You must secure doors, hinged panels, and the like to prevent their swinging into an employee and causing the employee to contact exposed energized parts.

(23) **Conductive materials and equipment**. You must handle conductive materials and equipment that are in contact with any part of an employee's body in a manner that will prevent them from contacting exposed energized conductors or circuit parts. If an employee handles long dimensional conductive objects (such as ducts and pipes) practices (such as the use of insulation, guarding, and material handling techniques) which will minimize the hazard.

(24) **Portable ladders**. Portable ladders must have nonconductive siderails if they are used where the employee or the ladder could contact exposed energized parts.

(25) **Conductive apparel**. You must not wear conductive articles of jewelry and clothing (such as watch bands, bracelets, rings, key chains, necklaces, metalized aprons, cloth with conductive thread, or metal headgear) if they might contact exposed energized parts.

(26) **Housekeeping duties.**

(a) Where live parts present an electrical contact hazard, employees must not perform housekeeping duties at such close distances to the parts that there is a possibility of contact, unless adequate safeguards (such as insulating equipment or barriers) are provided.

(b) You must not use electrically conductive cleaning materials (including conductive solids such as steel wool, metalized cloth, and silicon carbide, as well as conductive liquid solutions) in proximity to energized parts unless procedures are followed which will prevent electrical contact.

[Statutory Authority: RCW 49.17.010, .040, .050, and .060. 16-09-085 (Order 15-08), § 296-155-428, filed 04/19/16, effective, 05/20/16. Statutory Authority: Chapter 49.17 RCW. 94-15-096 (Order 94-07), § 296-155-428, filed 7/20/94, effective 9/20/94; 92-23-017 (Order 92-13), § 296-155-428, filed 11/10/92, effective 12/18/92; 88-11-021 (Order 88-04), § 296-155-428, filed 5/11/88.]

WAC 296-155-429 Lockout and tagging of circuits.

(1) **Controls**. You must tag and padlock controls that are deactivated during the course of work on energized or deenergized equipment or circuits in the open position.

(2) **Equipment and circuits**. You must render equipment or circuits that are deenergized inoperative and attach tags and locked padlocks at all points where such equipment or circuits can be energized.

(3) **Tags**. You must place tags to identify plainly the equipment or circuits being worked on.

(4) **Lockout and tagging**. While any employee is exposed to contact with parts of fixed electric equipment or circuits which have been deenergized, you must lock out, tag, or both the circuits energizing the parts according to the requirements of this section. You must follow the requirements in the order in which they are presented (i.e., (a) of this subsection first, then (b) of this subsection).

> *Note 1: As used in this section, fixed equipment refers to equipment fastened in connected by permanent wiring methods.*

> *Note 2: Lockout and tagging procedures that comply with chapter 296-803 WAC, will also be deemed to comply with this subsection provided that:*
>
> *1. The procedures address the electrical safety hazards covered by this part; and*
> *2. The procedures also incorporate the requirements of (c)(iv) and (d)(ii) of this subsection.*

(a) Procedures. You must maintain a written copy of the procedures outlined in this subsection and you must make it available for inspection by employees and by the director and his/her authorized representative.

> *Note: The written procedures may be in the form of a copy of this section, WAC 296-155-429.*

(b) Deenergizing equipment.

(i) You must determine procedures for deenergizing circuits and equipment before circuits or equipment are deenergized.

(ii) You must disconnect the circuits and equipment to be worked on from all electric energy sources. You must not use control circuit devices, such as push buttons, selector switches, and interlocks, as the sole means for deenergizing circuits or equipment. You must not use interlocks for electric equipment as a substitute for lockout and tagging procedures.

(iii) You must release stored electric energy which might endanger personnel. You must discharge capacitors and you must short-circuit and ground high capacitance elements, if the stored electric energy might endanger personnel.

> *Note: If the capacitors or associated equipment are handled in meeting this requirement, they must be treated as energized.*

(iv) You must block or relieve stored nonelectrical energy in devices that could reenergize electric circuit parts to the extent that the circuit parts could not be accidentally energized by the device.

(c) Application of locks and tags.

(i) You must place a lock and a tag on each disconnecting means used to deenergize circuits and equipment on which work is to be performed, except as provided in (c)(iii) and (v) of this subsection. You must attach the lock to prevent persons from operating the disconnecting means unless they resort to undue force or the use of tools.

(ii) Each tag must contain a statement prohibiting unauthorized operation of the disconnecting means and removal of the tag.

(iii) If a lock cannot be applied, or if you can demonstrate that tagging procedures will provide a level of safety equivalent to that obtained by the use of a lock, a tag may be used without a lock.

(iv) You must supplement a tag used without a lock, as permitted by item (iii) of this subsection, by at least one additional safety measure that provides a level of safety equivalent to that obtained by the use of a lock. Examples of additional safety measures include the removal of an isolating circuit element, blocking of a controlling switch, or opening of an extra disconnecting device.

(v) A lock may be placed without a tag only under the following conditions:

(A) Only one circuit or piece of equipment is deenergized; and

(B) The lockout period does not extend beyond the work shifts; and

(C) Employees exposed to the hazards associated with reenergizing the circuit or equipment are familiar with this procedure.

(d) Verification of deenergized condition. You must meet the requirements of this subsection before any circuits or equipment can be considered and worked as deenergized.

(i) A qualified person must operate the equipment operating controls or otherwise verify that the equipment cannot be restarted.

(ii) A qualified person must use test equipment to test the circuit elements and electrical parts of equipment to which employees will be exposed and must verify that the circuit elements and equipment parts are deenergized. The test must also determine if any energized conditions exists as a result of inadvertently induced voltage or unrelated voltage backfeed even though specific parts of the circuit have been deenergized and presumed to be safe. If the circuit to be tested is over 600 volts, nominal, the test equipment must be checked for proper operation immediately before and immediately after this test.

(e) Reenergizing equipment. These requirements must be met, in the order given, before circuits or equipment are reenergized, even temporarily.

(i) A qualified person must conduct tests and visual inspections, as necessary, to verify that all tools, electrical jumpers, shorts, grounds, and other such devices have been removed, so that the circuits and equipment can be safely energized.

(ii) You must warn employees exposed to the hazards associated with reenergizing the circuit or equipment to stay clear of circuits and equipment.

(iii) Each lock and tag must be removed by the employee who applied it or under his or her direct supervision. However, if this employee is absent from the work place, then the lock or tag may be removed by a qualified person designated to perform this task provided that:

(A) You ensure that the employee who applied the lock or tag is not available at the work place; and

(B) You ensure that the employee is aware that the lock or tag has been removed before he or she resumes work at that work place.

(iv) There must be a visual determination that all employees are clear of the circuits and equipment.

[Statutory Authority: RCW 49.17.010, .040, .050, and .060. 16-09-085 (Order 15-08), § 296-155-429, filed 04/19/16, effective, 05/20/16. Statutory Authority: RCW 49.17.010, .040, .050, and .060. 04-15-105 (Order 03-12), § 296-155-429, filed 07/20/04, effective 11/01/04. Statutory Authority: Chapter 49.17 RCW. 96-17-056, § 296-155-429, filed 8/20/96, effective 10/15/96; 94-15-096 (Order 94-07), § 296-155-429, filed 7/20/94, effective 9/20/94; 88-11-021 (Order 88-04), 296-155-429, filed 5/11/88.]

WAC 296-155-432 Maintenance of equipment.

You must ensure that all wiring components and utilization equipment in hazardous locations are maintained in a dust-tight, dust-ignition-proof, or explosion-proof condition, as appropriate. There must be no loose or missing screws, gaskets, threaded connections, seals, or other impairments to a tight condition.

[Statutory Authority: RCW 49.17.010, .040, .050, and .060. 16-09-085 (Order 15-08), § 296-155-432, filed 04/19/16, effective, 05/20/16. Statutory Authority: Chapter 49.17 RCW. 88-11-021 (Order 88-04), § 296-155-432, filed 5/11/88.]

WAC 296-155-434 Environmental deterioration of equipment.

(1) **Deteriorating agents.**

(a) Unless identified for use in the operating environment, you must not locate any conductors or equipment:

(i) In damp or wet locations;

(ii) Where exposed to gases, fumes, vapors, liquids, or other agents having a deteriorating effect on the conductors or equipment; or

(iii) Where exposed to excessive temperatures.

(b) You must protect control equipment, utilization equipment, and busways approved for use in dry locations only against damage from the weather during building construction.

(2) **Protection against corrosion**. Metal raceways, cable armor, boxes, cable sheathing, cabinets, elbows, couplings, fittings, supports, and support hardware must be of materials appropriate for the environment in which they are to be installed.

[Statutory Authority: RCW 49.17.010, .040, .050, and .060. 16-09-085 (Order 15-08), § 296-155-434, filed 04/19/16, effective, 05/20/16. Statutory Authority: Chapter 49.17 RCW. 88-11-021 (Order 88-04), § 296-155-434, filed 5/11/88.]

WAC 296-155-437 Batteries and battery charging.

(1) **General requirements.**

(a) You must locate batteries of the unsealed type in enclosures with outside vents or in well ventilated rooms and you must arrange them so as to prevent the escape of fumes, gases, or electrolyte spray into other areas.

(b) You must provide ventilation to ensure diffusion of the gases from the battery and to prevent the accumulation of an explosive mixture.

(c) Racks and trays must be substantial and must be treated to make them resistant to the electrolyte.

(d) Floors must be of acid resistant construction unless protected from acid accumulations.

(e) You must provide face shields, aprons, and rubber gloves for workers handling acids or batteries and workers must wear them.

(f) You must provide facilities for quick drenching of the eyes and body within 25 feet (7.62 m) of battery handling areas.

(g) You must provide facilities for flushing and neutralizing spilled electrolyte and for fire protection.

(2) **Charging.**

(a) Battery charging installations must be located in areas designated for that purpose.

(b) You must protect charging apparatus from damage by trucks.

(c) When batteries are being charged, you must keep the vent caps in place to avoid electrolyte spray. You must maintain vent caps in functioning condition.

[Statutory Authority: RCW 49.17.010, .040, .050, and .060. 16-09-085 (Order 15-08), § 296-155-437, filed 04/19/16, effective, 05/20/16. Statutory Authority: Chapter 49.17 RCW. 88-11-021 (Order 88-04), § 296-155-437, filed 5/11/88.]

WAC 296-155-441 Applicability.

(1) **Covered**. WAC 296-155-441 through 296-155-459 contain installation safety requirements for electrical equipment and installations used to provide electric power and light at the job site. These sections apply to installations, both temporary and permanent, used on the job site; but these sections do not apply to existing permanent installations that were in place before the construction activity commenced.

> *Note: If the electrical installation is made in accordance with the National Electrical Code ANSI/NFPA 70-1984, exclusive of formal interpretations and tentative interim amendments, it will be deemed to be in compliance with WAC 296-155-444 through 296-155-459, except for WAC 296-155-447 (2)(a) and 296-155-449 (1)(b)(ii)(E), (F), (G), and (J).*

(2) **Not covered**. WAC 296-155-441 through 296-155-459 do not cover installations used for the generation, transmission, and distribution of electric energy, including related communication, metering, control, and transformation installations. (However, these regulations do cover portable and vehicle-mounted generators used to provide power for equipment used at the job site.) See the National Electrical Safety Code (NESC).

[Statutory Authority: RCW 49.17.010, .040, .050, and .060. 16-09-085 (Order 15-08), § 296-155-441, filed 04/19/16, effective, 05/20/16. Statutory Authority: RCW 49.17.010, .040, .050. 02-12-098 (Order 00-20), § 296-155-441, filed 06/05/02, effective 08/01/02. Statutory Authority: Chapter 49.17 RCW. 88-11-021 (Order 88-04), § 296-155-441, filed 5/11/88.]

WAC 296-155-444 General requirements.

(1) **Approval**. All electrical conductors and equipment must be approved.

(2) **Examination, installation, and use of equipment.**

(a) Examination. You must ensure that electrical equipment is free from recognized hazards that are likely to cause death or serious physical harm to employees. You must determine safety of equipment on the basis of the following considerations:

(i) Suitability for installation and use in conformity with the provisions of this part. Suitability of equipment for an identified purpose may be evidenced by listing, labeling, or certification for that identified purpose.

(ii) Mechanical strength and durability, including, for parts designed to enclose and protect other equipment, the adequacy of the protection thus provided.

(iii) Electrical insulation.

(iv) Heating effects under conditions of use.

(v) Arcing effects.

(vi) Classification by type, size, voltage, current capacity, specific use.

(vii) Other factors which contribute to the practical safeguarding of employees using or likely to come in contact with the equipment.

(b) Installation and use. You must install listed, labeled, or certified equipment and used in accordance with instructions included in the listing, labeling, or certification.

(3) **Interrupting rating**. Equipment intended to break current must have an interrupting rating at system voltage sufficient for the current that must be interrupted.

(4) **Mounting and cooling of equipment.**

(a) Mounting. You must firmly secure electric equipment to the surface on which it is mounted. You must not use wooden plugs driven into holes in masonry, concrete, plaster, or similar materials.

(b) Cooling. You must install electrical equipment which depends upon the natural circulation of air and convection principles for cooling of exposed surfaces so that room air flow over such surfaces is not prevented by walls or by adjacent installed equipment. For equipment designed for floor mounting, you must provide clearance between top surfaces and adjacent surfaces to dissipate rising warm air. You must install electrical equipment provided with ventilating openings so that walls or other obstructions do not prevent the free circulation of air through the equipment.

(5) **Splices**. You must splice or join conductors with splicing devices designed for the use or by brazing, welding, or soldering with a fusible metal or alloy. You must first splice or join soldered splices as to be mechanically and electrically secure without solder and then soldered. All splices and joints and the free ends of conductors must be covered with an insulation equivalent to that of the conductors or with an insulating device designed for the purpose.

(6) **Arcing parts**. Parts of electric equipment which in ordinary operation produce arcs, sparks, flames, or molten metal must be enclosed or separated and isolated from all combustible material.

(7) **Marking**. You must not use electrical equipment unless the manufacturer's name, trademark, or other descriptive marking by which the organization responsible for the product may be identified is placed on the equipment and unless other markings are provided giving voltage, current, wattage, or other ratings as necessary. The marking must be of sufficient durability to withstand the environment involved.

(8) **Identification of disconnecting means and circuits**. You must legibly mark each disconnecting means required by this part for motors and appliances to indicate its purpose, unless located and arranged so the purpose is evident. You must legibly mark each service, feeder, and branch circuit, at its disconnecting means or overcurrent device, to indicate its purpose, unless located and arranged so the purpose is evident. These markings must be of sufficient durability to withstand the environment involved.

(9) **Construction site**. You must take precautions to make any necessary open wiring inaccessible to unauthorized personnel.

(10) **600 volts, nominal, or less**. This subsection applies to equipment operating at 600 volts, nominal, or less.

(a) Working space about electric equipment. You must provide sufficient access and working space and maintained about all electric equipment to permit ready and safe operation and maintenance of such equipment.

(i) Working clearances. Except as required or permitted elsewhere in this part, the dimension of the working space in the direction of access to live parts operating at 600 volts or less and likely to require examination, adjustment, servicing, or maintenance while alive must not be less than indicated in Table I-1. In addition to the dimensions shown in Table I-1, workspace must not be less than 30 inches (762 mm) wide in front of the electric equipment. You must measure distances from the live parts if they are exposed, or from the enclosure front or opening if the live parts are enclosed. Walls constructed of concrete, brick, or tile are considered to be grounded. Working space is not required in back of assemblies such as dead-front switchboards or motor control centers where there are no renewable or adjustable parts such as fuses or switches on the back and where all connections are accessible from locations other than the back.

Table I-1 Working Clearances

Nominal Voltage to Ground	**Minimum Clear Distance for Conditions[1]**		
	(a) Feet[2]	(b) Feet[2]	(c) Feet[2]
0-150	3	3	3
151-600	3	3 1/2	4

[1] Conditions (a), (b), and (c) are as follows: (a) Exposed live parts on one side and no live or grounded parts on the other side of the working space, or exposed live parts on both sides effectively guarded by insulating material. Insulated wire or insulated busbars operating at not over 300 volts are not considered live parts. (b) Exposed live parts on one side and grounded parts on the other side. (c) Exposed live parts on both sides of the workspace not guarded provided in condition (a) with the operator between.

[2] Note: For International System of Units (S1): One foot=0.3048m.

(ii) Clear spaces. You must not use working space required by this part used for storage. When normally enclosed live parts are exposed for inspection or servicing, you must guard the working space, if in a passageway or general open space.

(iii) Access and entrance to working space. You must provide at least one entrance to give access to the working space about electric equipment.

(iv) Front working space. Where there are live parts normally exposed on the front of switchboards or motor control centers, the working space in front of such equipment must not be less than 3 feet (914 mm).

(v) Headroom. The minimum headroom of working spaces about service equipment, switchboards, panelboards, or motor control centers must be 6 feet 3 inches (1.91 m).

(b) Guarding of live parts.

(i) Except as required or permitted elsewhere in this part, you must guard live parts of electric equipment operating at 50 volts or more against accidental contact by cabinets or other forms of enclosures, or by any of the following means:

(A) By location in a room, vault, or similar enclosure that is accessible only to qualified persons.

(B) By partitions or screens so arranged that only qualified persons will have access to the space within reach of the live parts. Any openings in such partitions or screens must be so sized and located that persons are not likely to come into accidental contact with the live parts or to bring conducting objects into contact with them.

(C) By location on a balcony, gallery, or platform so elevated and arranged as to exclude unqualified persons.

(D) By elevation of 8 feet (2.44 m) or more above the floor or other working surface and so installed as to exclude unqualified persons.

(ii) In locations where electric equipment would be exposed to physical damage, you must arrange enclosures or guards and ensure that they are of such strength so as to prevent such damage.

(iii) You must mark entrances to rooms and other guarded locations containing exposed live parts with conspicuous warning signs forbidding unqualified persons to enter.

(11) **Over 600 volts, nominal.**

(a) General. Conductors and equipment used on circuits exceeding 600 volts, nominal, must comply with all applicable provisions of subsections (1) through (7) of this section and with the following provisions which supplement or modify those requirements. The provisions of (b), (c), and (d) of this subsection do not apply to equipment on the supply side of the service conductors.

(b) Enclosure for electrical installations. Electrical installations in a vault, room, closet or in an area surrounded by a wall, screen, or fence, access to which is controlled by lock and key or other equivalent means, are considered to be accessible to qualified persons only. A wall, screen, or fence less than 8 feet (2.44 m) in height is not considered adequate to prevent access unless it has other features that provide a degree of isolation equivalent to an 8 foot (2.44 m) fence. You must keep the entrances to all buildings, rooms or enclosures containing exposed live parts or exposed conductors operating at over 600 volts, nominal, locked or they must be under the observation of a qualified person at all times.

(i) Installations accessible to qualified persons only. Electrical installations having exposed live parts must be accessible to qualified persons only and must comply with the applicable provisions of (c) of this subsection.

(ii) Installations accessible to unqualified persons. Electrical installations that are open to unqualified persons must be made with metal-enclosed equipment or must be enclosed in a vault or in an area, access to which is controlled by a lock. Metal-enclosed switchgear, unit substations, transformers, pull boxes, connection boxes, and other similar associated equipment must be marked with appropriate caution signs. If equipment is exposed to physical damage from vehicular traffic, you must provide guards to prevent such damage. Ventilating or similar openings in metal-enclosed equipment must be designed so that foreign objects inserted through these openings will be deflected from energized parts.

(c) Workspace about equipment. You must provide and maintain sufficient space about electric equipment to permit ready and safe operation and maintenance of such equipment. Where energized parts are exposed, the minimum clear workspace must not be less than 6 feet 6 inches (1.98 m) high (measured vertically from the floor or platform,) or less than 3 feet (914 mm) wide (measured parallel to the equipment.) The depth must be as required in Table I-2. The workspace must be adequate to permit at least a 90 degree opening of doors or hinged panels.

(i) Working space. The minimum clear working space in front of electric equipment such as switchboards, control panels, switches, circuit breakers, motor controllers, relays, and similar equipment must not be less than specified in Table I-2 unless otherwise specified in this part. You must measure distances from the live parts if they are exposed, or from the enclosure front or opening if the live parts are enclosed. However, working space is not required in back of equipment such as deadfront switchboards or control assemblies where there are no renewable or adjustable parts (such as fuses or switches) on the back and where all connections are accessible from locations other than the back. Where rear access is required to work on deenergized parts on the back of enclosed equipment, you must provide a minimum working space of 30 inches (762 mm) horizontally.

Table I-2 Minimum Depth of Clear Working Space in Front of Electric Equipment			
Nominal Voltage to Ground	**Minimum Clear Distance for Conditions[1]**		
	(a) Feet[2]	**(b) Feet[2]**	**(c) Feet[2]**
601 to 2,500	3	4	5
2,501 to 9,000	4	5	6
9,001 to 25,000	5	6	9
25,001 to 75kV	6	8	10
Above 75kV	8	10	12

[1] Conditions (a), (b), and (c) are as follows: (a) Exposed live parts on one side and no live or grounded parts on the other side of the working space, or exposed live parts on both sides effectively guarded by insulating materials. Insulated wire or insulated busbars operating at not over 300 volts are not considered live parts. (b) Exposed live parts on one side and grounded parts on the other side. Walls constructed of concrete, brick, or the tile are considered to be grounded surfaces. (c) Exposed live parts on both sides of the workspace (not guarded as provided in Condition (a)) with the operator between.

[2] Note: For S1 units: One foot=0.3048m.

(ii) Lighting outlets and points of control. You must arrange the lighting outlets so that persons changing lamps or making repairs on the lighting system will not be endangered by live parts or other equipment. You must locate the points of control so that persons are not likely to come in contact with any live part or moving part of the equipment while turning on the lights.

(iii) Elevation of unguarded live parts. You must maintain live parts above working space at elevations not less than specified in Table I-3.

Table I-3 Elevation of Unguarded Energized Parts Above Working Space	
Nominal Voltage to Between Phases	**Minimum Elevation**
601 to 7,500	8 feet 6 inches[1]
7,501 to 35,000	9 feet
Over 35kV	9 feet + 0.37 inches per kV above 35 kv

[1] Note: For S1 units: One inch=25.4mm, one foot=0.3048m.

(d) Entrance and access to workspace. You must provide at least one entrance not less than 24 inches (610 mm) wide and 6 feet 6 inches (1.98 m) high to give access to the working space about electric equipment. On switchboard and control panels exceeding 48 inches (1.22 m) in width, there must be one entrance at each end of such board where practicable. Where bare energized parts at any voltage or insulated energized parts above 600 volts are located adjacent to such entrance, you must guard them.

(12) **Welding and cutting equipment**. Welding and cutting equipment must meet the requirements specified in Parts D and H of this chapter.

[Statutory Authority: RCW 49.17.010, .040, .050, and .060. 16-09-085 (Order 15-08), § 296-155-444, filed 04/19/16, effective, 05/20/16. Statutory Authority: Chapter 49.17 RCW. 93-19-142 (Order 93-04), § 296-155-444, filed 9/22/93, effective 11/1/93; 92-23-017 (Order 92-13), § 296-155-444, filed 11/10/92, effective 12/18/92; 88-11-021 (Order 88-04), § 296-155-444 filed 5/11/88.]

WAC 296-155-447 Wiring design and protection.

(1) **Use and identification of grounded and grounding conductors.**

(a) Identification of conductors. A conductor used as a grounded conductor must be identifiable and distinguishable from all other conductors. A conductor used as an equipment grounding conductor must be identifiable and distinguishable from all other conductors.

(b) Polarity of connections. You must not attach any grounded conductor to any terminal or lead so as to reverse designated polarity.

(c) Use of grounding terminals and devices. You must not use a grounding terminal or grounding-type device on a receptacle, cord connector, or attachment plug for purposes other than grounding.

(2) **Branch circuits.**

(a) Ground-fault protection.

(i) General. You must use either ground-fault circuit interrupters as specified in (a)(ii) of this subsection or an assured equipment grounding conductor program as specified in (a)(iii) of this subsection to protect employees on construction sites. These requirements are in addition to any other requirements for equipment grounding conductors.

(ii) Ground-fault circuit interrupters. All 120-volt, single-phase, 15-ampere and 20-ampere receptacle outlets on construction sites, which are not a part of the permanent wiring of the building or structure and which are in use by employees, must have approved ground-fault circuit interrupters for personnel protection. Receptacles on a two-wire, single-phase portable or vehicle-mounted generator rated not more than 5kW, where the circuit conductors of the generator are insulated from the generator frame and all other grounded surfaces, need not be protected with ground-fault circuit interrupters.

(iii) Assured equipment grounding conductor program. You must establish and implement an assured equipment grounding conductor program on construction sites covering all cord sets, receptacles which are not a part of the building or structure, and equipment connected by cord and plug which are available for use or used by employees. This program must comply with the following minimum requirements:

(A) A written description of the program, including the specific procedures adopted by you, must be available at the job site for inspection and copying by the director and any affected employee.

(B) You must designate one or more competent persons (as defined in WAC 296-155-012(4)) to implement the program, and to perform continuing tests and inspections as required.

(C) You must visually inspect each cord set, attachment cap, plug and receptacle of cord sets, and any equipment connected by cord and plug, except cord sets and receptacles which are fixed and not exposed to damage, before each day's use for external defects, such as deformed or missing pins or insulation damage, and for indications of possible internal damage. You must not use equipment found damaged or defective until repaired.

(D) You must perform the following tests on all cord sets, receptacles which are not a part of the permanent wiring of the building or structure, and cord-connected and plug-connected equipment required to be grounded:

(I) You must test all equipment grounding conductors for continuity and found to be electrically continuous.

(II) You must test each receptacle and attachment cap or plug for correct attachment of the equipment grounding conductor. The equipment grounding conductor must be connected to its proper terminal.

(III) You must test each outlet receptacle, or power source to ensure proper polarity.

(E) You must perform all required tests:

(I) Before first use;

(II) Before equipment is returned to service following any repairs;

(III) Before equipment is used after any incident which can be reasonably suspected to have caused damage (for example, when a cord set is run over); and

(IV) At intervals not to exceed 3 months, except that cord sets and receptacles which are fixed and not exposed to damage at intervals not exceeding 6 months.

(F) You must not make available or permit the use by employees of any equipment which has not met the requirements of (a)(iii) of this subsection.

(G) You must record tests performed as required in this subsection. This test record must identify each receptacle, cord set, and cord-connected and plug-connected equipment that passed the test and must indicate the last date it was tested or the interval for which it was tested. You must keep this record by means of logs, color coding, or other effective means and you must maintain it until replaced by a more current record. You must make the record available on the job site for inspection by the director and any affected employee.

(b) Outlet devices. Outlet devices must have an ampere rating not less than the load to be served and must comply with the following:

(i) Single receptacles. A single receptacle installed on an individual branch circuit must have an ampere rating of not less than that of the branch circuit.

(ii) Two or more receptacles. Where connected to a branch circuit supplying two or more receptacles or outlets, receptacle ratings must conform to the values listed in Table I-4.

(iii) Receptacles used for the connection of motors. The rating of an attachment plug or receptacle used for cord-connection and plug-connection of a motor to a branch circuit must not exceed 15 amperes at 125 volts or 10 amperes at 250 volts if individual overload protection is omitted.

Table I-4 Receptacle Ratings for Various Size Circuits

Circuit Rating Amperes	Receptacle Rating Amperes
15	*Not over 15*
20	15 or 20
30	30
40	40 or 50
50	50

(3) Outside conductors and lamps.

(a) 600 volts, nominal, or less. (a)(i) through (iv)(D) of this subsection apply to branch circuit, feeder, and service conductors rated 600 volts, nominal, or less and run outdoors as open conductors.

(i) Conductors on poles. Conductors supported on poles must provide a horizontal climbing space not less than the following:

(A) Power conductors below communication conductors: 30 inches (762 mm).

(B) Power conductors alone or above communication conductors: 300 volts or less-24 inches (610 mm); more than 300 volts-30 inches (762 mm).

(C) Communication conductors below power conductors: With power conductors 300 volts or less-24 inches (610 mm); more than 300 volts-30 inches (762 mm).

(ii) Clearance from ground. Open conductors must conform to the following minimum clearances:

(A) 10 feet (3.05 m)-above finished grade, sidewalks, or from any platform or projection from which they might be reached.

(B) 12 feet (3.66 m)-over areas subject to vehicular traffic other than truck traffic.

(C) 15 feet (4.57 m)-over areas other than those specified in (a)(ii)(D) of this subsection that are subject to truck traffic.

(D) 18 feet (5.49 m)-over public streets, alleys, roads, and driveways.

(iii) Clearance from building openings. Conductors must have a clearance of at least 3 feet (914 mm) from windows, doors, fire escapes, or similar locations. Conductors run above the top level of a window are considered to be out of reach from that window and, therefore, do not have to be 3 feet (914 mm) away.

(iv) Clearance over roofs. Conductors above roof space accessible to employees on foot must have a clearance from the highest point of the roof surface of not less than 8 feet (2.44 m) vertical clearance for insulated conductors, not less than 10 feet (3.05 m) vertical or diagonal clearance for covered conductors, and not less than 15 feet (4.57 m) for bare conductors, except that:

(A) Where the roof space is also accessible to vehicular traffic, the vertical clearance must not be less than 18 feet (5.49 m); or

(B) Where the roof space is not normally accessible to employees on foot, fully insulated conductors must have a vertical or diagonal clearance of not less than 3 feet (914 mm); or

(C) Where the voltage between conductors is 300 volts or less and the roof has a slope of not less than 4 inches (102 mm) in 12 inches (305 mm), the clearance from roofs must be at least 3 feet (914 mm); or

(D) Where the voltage between conductors is 300 volts or less and the conductors do not pass over more than 4 feet (1.22 m) of the overhang portion of the roof and they are terminated at a through-the-roof raceway or support, the clearance from roofs must be at least 18 inches (457 mm).

(b) Location of outdoor lamps. Lamps for outdoor lighting must be located below all live conductors, transformers, or other electric equipment, unless such equipment is controlled by a disconnecting means that can be locked in the open position or unless adequate clearances or other safeguards are provided for relamping operations.

(4) **Services**.

(a) Disconnecting means.

(i) General. You must provide means to disconnect all conductors in a building or other structure from the service-entrance conductors. The disconnecting means must plainly indicate whether it is in the open or closed position and must be installed at a readily accessible location nearest the point of entrance of the service-entrance conductors.

(ii) Simultaneous opening of poles. Each service disconnecting means must simultaneously disconnect all ungrounded conductors.

(b) Services over 600 volts, nominal. The following additional requirements apply to services over 600 volts, nominal.

(i) Guarding. You must guard service-entrance conductors installed as open wires to make them accessible only to qualified persons.

(ii) Warning signs. You must post signs warning of high voltage where unauthorized employees might come in contact with live parts.

(5) **Overcurrent protection**.

(a) 600 volts, nominal, or less. The following requirements apply to overcurrent protection of circuits rated 600 volts, nominal, or less.

(i) Protection of conductors and equipment. Conductors and equipment must be protected from overcurrent in accordance with their ability to safely conduct current. Conductors must have sufficient ampacity to carry the load.

(ii) Grounded conductors. Except for motor-running overload protection, overcurrent devices must not interrupt the continuity of the grounded conductor unless all conductors of the circuit are opened simultaneously.

(iii) Disconnection of fuses and thermal cutouts. Except for devices provided for current-limiting on the supply side of the service disconnecting means, all cartridge fuses which are accessible to other than qualified persons and all fuses and thermal cutouts on circuits over 150 volts to ground must be provided with disconnecting means. You must install this disconnecting means so that the fuse or thermal cutout can be disconnected from its supply without disrupting service to equipment and circuits unrelated to those protected by the overcurrent device.

(iv) Location in or on premises. Overcurrent devices must be readily accessible. You must not locate overcurrent devices where they could create an employee safety hazard by being exposed to physical damage or located in the vicinity of easily ignitible material.

(v) Arcing or suddenly moving parts. You must locate or shield fuses and circuit breakers so that employees will not be burned or otherwise injured by their operation.

(vi) Circuit breakers.

(A) Circuit breakers must clearly indicate whether they are in the open (off) or closed (on) position.

(B) Where circuit breaker handles on switchboards are operated vertically rather than horizontally or rotationally, the up position of the handle must be the closed (on) position.

(C) If used as switches in 120-volt, fluorescent lighting circuits, circuit breakers must be marked “SWD.”

(b) Over 600 volts, nominal. Feeders and branch circuits over 600 volts, nominal, must have short-circuit protection.

(6) **Effective grounding**. The path from circuits, equipment, structures, and conduit or enclosures to ground must be permanent and continuous; have ample carrying capacity to conduct safely the currents liable to be imposed on it; and have the impedance sufficiently low to limit the potential above ground and to result in the operation of the overcurrent devices in the circuit. (a) through (k) of this subsection contain grounding requirements for systems, circuits, and equipment.

(a) Systems to be grounded. You must ground the following systems which supply premises wiring:

(i) 3-wire DC systems. All 3-wire DC systems must have their neutral conductor grounded.

(ii) 2-wire DC systems. 2-wire DC systems operating at over 50 volts through 300 volts between conductors must be grounded unless they are rectifier-derived from an AC system complying with (a)(iii), (iv), and (v) of this subsection.

(iii) AC circuits, less than 50 volts. AC circuits of less than 50 volts must be grounded if they are installed as overhead conductors outside of buildings or if they are supplied by transformers and the transformer primary supply system is ungrounded or exceeds 150 volts to ground.

(iv) AC systems, 50 volts to 1000 volts. AC systems of 50 volts to 1000 volts must be grounded under any of the following conditions, unless exempted by (a)(v) of this subsection:

(A) If the system can be so grounded that the maximum voltage to ground on the ungrounded conductors does not exceed 150 volts;

(B) If the system is nominally rated 480Y/277 volt, 3-phase, 4-wire in which the neutral is used as a circuit conductor;

(C) If the system is nominally rated 240/120 volt, 3-phase, 4-wire in which the midpoint of one phase is used as a circuit conductor; or

(D) If a service conductor is uninsulated.

(v) Exceptions. AC systems of 50 volts to 1000 volts are not required to be grounded if the system is separately derived and is supplied by a transformer that has a primary voltage rating less than 1000 volts, provided all of the following conditions are met:

(A) The system is used exclusively for control circuits;

(B) The conditions of maintenance and supervision assure that only qualified persons will service the installation;

(C) Continuity of control power is required; and

(D) Ground detectors are installed on the control system.

(b) Separately derived systems. Where (a) of this subsection requires grounding of wiring systems whose power is derived from generator, transformer, or converter windings and has no direct electrical connection, including a solidly connected grounded circuit conductor, to supply conductors originating in another system, (e) of this subsection must also apply.

(c) Portable and vehicle-mounted generators.

(i) Portable generators. Under the following conditions, the frame of a portable generator need not be grounded and may serve as the grounding electrode for a system supplied by the generator:

(A) The generator supplies only equipment mounted on the generator and/or cord-connected and plug-connected equipment through receptacles mounted on the generator; and

(B) The noncurrent-carrying metal parts of equipment and the equipment grounding conductor terminals of the receptacles are bonded to the generator frame.

(ii) Vehicle-mounted generators. Under the following conditions the frame of a vehicle may serve as the grounding electrode for a system supplied by a generator located on the vehicle:

(A) The frame of the generator is bonded to the vehicle frame; and

(B) The generator supplies only equipment located on the vehicle and/or cord-connected and plug-connected equipment through receptacles mounted on the vehicle or on the generator; and

(C) The noncurrent-carrying metal parts of equipment and the equipment grounding conductor terminals of the receptacles are bonded to the generator frame; and

(D) The system complies with all other provisions of this section.

(iii) Neutral conductor bonding. A neutral conductor must be bonded to the generator frame if the generator is a component of a separately derived system. No other conductor need be bonded to the generator frame.

(d) Conductors to be grounded. For AC premises wiring systems you must ground the identified conductor.

(e) Grounding connections.

(i) Grounded system. For a grounded system, you must use a grounding electrode conductor to connect both the equipment grounding conductor and the grounded circuit conductor to the grounding electrode. You must connect both the equipment grounding conductor and the grounding electrode conductor to the grounded circuit conductor on the supply side of the service disconnecting means, or on the supply side of the system disconnecting means or overcurrent devices if the system is separately derived.

(ii) Ungrounded systems. For an ungrounded service-supplied system, you must connect the equipment grounding conductor to the grounding electrode conductor at the service equipment. For an ungrounded separately derived system, you must connect the equipment grounding conductor to the grounding electrode conductor at, or ahead of, the system disconnecting means or overcurrent devices.

(f) Grounding path. The path to ground from circuits, equipment, and enclosures must be permanent and continuous.

(g) Supports, enclosures, and equipment to be grounded.

(i) Supports and enclosures for conductors. Metal cable trays, metal raceways, and metal enclosures for conductors must be grounded, except that:

(A) Metal enclosures such as sleeves that are used to protect cable assemblies from physical damage need not be grounded; and

(B) Metal enclosures for conductors added to existing installations of open wire, knob-and-tube wiring, and nonmetallic-sheathed cable need not be grounded if all of the following conditions are met:

(I) Runs are less than 25 feet (7.62 m);

(II) Enclosures are free from probable contact with ground, grounded metal, metal laths, or other conductive materials; and

(III) Enclosures are guarded against employee contact.

(ii) Service equipment enclosures. Metal enclosures for service equipment must be grounded.

(iii) Fixed equipment. Exposed noncurrent-carrying metal parts of fixed equipment which may become energized must be grounded under any of the following conditions:

(A) If within 8 feet (2.44 m) vertically or 5 feet (1.52 m) horizontally of ground or grounded metal objects and subject to employee contact.

(B) If located in a wet or damp location and subject to employee contact.

(C) If in electrical contact with metal.

(D) If in a hazardous (classified) location.

(E) If supplied by a metal-clad, metal-sheathed, or grounded metal raceway wiring method.

(F) If equipment operates with any terminal at over 150 volts to ground; however, the following need not be grounded:

(I) Enclosures for switches or circuit breakers used for other than service equipment and accessible to qualified persons only;

(II) Metal frames of electrically heated appliances which are permanently and effectively insulated from ground; and

(III) The cases of distribution apparatus such as transformers and capacitors mounted on wooden poles at a height exceeding 8 feet (2.44 m) above ground or grade level.

(iv) Equipment connected by cord and plug. Under any of the conditions described in (g)(iv) (A) through (C) of this subsection, exposed noncurrent-carrying metal parts of cord-connected and plug-connected equipment which may become energized must be grounded:

(A) If in a hazardous (classified) location (see WAC 296-155-444).

(B) If operated at over 150 volts to ground, except for guarded motors and metal frames of electrically heated appliances if the appliance frames are permanently and effectively insulated from ground.

(C) If the equipment is one of the types listed in (g)(iv)(C)(I) through (V) of this subsection. However, even though the equipment may be one of these types, it need not be grounded if it is exempted by (g)(iv)(C)(VI) of this subsection.

(I) Hand held motor-operated tools;

(II) Cord-connected and plug-connected equipment used in damp or wet locations or by employees standing on the ground or on metal floors or working inside of metal tanks or boilers;

(III) Portable and mobile x-ray and associated equipment;

(IV) Tools likely to be used in wet and/or conductive locations; and

(V) Portable hand lamps.

(VI) Tools likely to be used in wet and/or conductive locations need not be grounded if supplied through an isolating transformer with an ungrounded secondary of not over 50 volts. Listed or labeled portable tools and appliances protected by a system of double insulation, or its equivalent, need not be grounded. If such a system is employed, you must distinctively mark the equipment to indicate that the tool or appliance utilizes a system of double insulation.

(v) Nonelectrical equipment. The metal parts of the following nonelectrical equipment must be grounded: Frames and tracks of electrically operated cranes; frames of nonelectrically driven elevator cars to which electric conductors are attached; hand-operated metal shifting ropes or cables of electric elevators, and metal partitions, grill work, and similar metal enclosures around equipment of over 1 kV between conductors.

(h) Methods of grounding equipment.

(i) With circuit conductors. Noncurrent-carrying metal parts of fixed equipment, if required to be grounded by this part, must be grounded by an equipment grounding conductor which is contained within the same raceway, cable, or cord, or runs with or encloses the circuit conductors. For DC circuits only, the equipment grounding conductor may be run separately from the circuit conductors.

(ii) Grounding conductor. A conductor used for grounding fixed or movable equipment must have capacity to conduct safely any fault current which may be imposed on it.

(iii) Equipment considered effectively grounded. Electric equipment is considered to be effectively grounded if it is secured to, and in electrical contact with, a metal rack or structure that is provided for its support and the metal rack or structure is grounded by the method specified for the noncurrent-carrying metal parts of fixed equipment in (h)(i) of this subsection. Metal car frames supported by metal hoisting cables attached to or running over metal sheaves or drums of grounded elevator machines are also considered to be effectively grounded.

(i) Bonding.

(i) If bonding conductors are used to assure electrical continuity, they must have the capacity to conduct any fault current which may be imposed.

(ii) When attaching bonding and grounding clamps or clips, you must make a secure and positive metal-to-metal contact. You must make such attachments before closures are opened and material movements are started and they must not be broken until after material movements are stopped and closures are made.

(j) Made electrodes. If made electrodes are used, they must be free from nonconductive coatings, such as paint or enamel; and, if practicable, they must be embedded below permanent moisture level. A single electrode consisting of a rod, pipe or plate which has a resistance to ground greater than 25 ohms must be augmented by one additional electrode installed no closer than 6 feet (1.83 m) to the first electrode.

(k) Grounding of systems and circuits of 1000 volts and over (high voltage).

(i) General. If high voltage systems are grounded, they must comply with all applicable provisions of (a) through (j) of this subsection as supplemented and modified by (k) of this subsection.

(ii) Grounding of systems supplying portable or mobile equipment. Systems supplying portable or mobile high voltage equipment, other than substations installed on a temporary basis, must comply with the following:

(A) Portable and mobile high voltage equipment must be supplied from a system having its neutral grounded through an impedance. If a delta-connected high voltage system is used to supply the equipment, a system neutral must be derived.

(B) You must connect exposed noncurrent-carrying metal parts of portable and mobile equipment by an equipment grounding conductor to the point at which the system neutral impedance is grounded.

(C) You must provide ground-fault detection and relaying to automatically deenergize any high voltage system component which has developed a ground fault. You must continuously monitor the continuity of the equipment grounding conductor so as to deenergize automatically the high voltage feeder to the portable equipment upon loss of continuity of the equipment grounding conductor.

(D) The grounding electrode to which the portable or mobile equipment system neutral impedance is connected must be isolated from and separated in the ground by at least 20 feet (6.1 m) from any other system or equipment grounding electrode, and there must be no direct connection between the grounding electrodes, such as buried pipe, fence or like objects.

(iii) Grounding of equipment. All noncurrent-carrying metal parts of portable equipment and fixed equipment including their associated fences, housings, enclosures, and supporting structures must be grounded. However, equipment which is guarded by location and isolated from ground need not be grounded. Additionally, pole-mounted distribution apparatus at a height exceeding 8 feet (2.44 m) above ground or grade level need not be grounded.

[Statutory Authority: RCW 49.17.010, .040, .050, and .060. 16-09-085 (Order 15-08), § 296-155-447, filed 04/19/16, effective, 05/20/16. Statutory Authority: Chapter 49.17 RCW. 93-19-142 (Order 93-04), § 296-155-447, filed 9/22/93, effective 11/1/93; 88-11-021 (Order 88-04), § 296-155-447 filed 5/11/88.]

WAC 296-155-449 Wiring methods, components, and equipment for general use.

(1) **Wiring methods**. The provisions of this subsection do not apply to conductors which form an integral part of equipment such as motors, controllers, motor control centers and like equipment.

(a) General requirements.

(i) Electrical continuity of metal raceways and enclosures. Metal raceways, cable armor, and other metal enclosures for conductors must be metallically joined together into a continuous electric conductor and must be so connected to all boxes, fittings, and cabinets as to provide effective electrical continuity.

(ii) Wiring in ducts. You must not install any wiring systems of any type in ducts used to transport dust, loose stock or flammable vapors. You must not install any wiring system of any type in any duct used for vapor removal or in any shaft containing only such ducts.

(iii) Receptacles for attachment plugs must be approved, concealed contact type with a contact for extending ground continuity and must be so designed and constructed that the plug may be pulled out without leaving any live parts exposed to accidental contact. All temporary outlet boxes must be of a type suitable for use in wet or damp locations.

(iv) Attachment plugs or other connectors supplying equipment at more than 300 volts must be of the skirted type or otherwise so designed that arcs will be confined.

(b) Temporary wiring.

(i) Scope. The provisions of (b) of this subsection apply to temporary electrical power and lighting wiring methods which may be of a class less than would be required for a permanent installation. Except as specifically modified in (b) of this subsection, all other requirements of this part for permanent wiring must apply to temporary wiring installations. You must remove temporary wiring immediately upon completion of construction or the purpose for which the wiring was installed.

(ii) General requirements for temporary wiring.

(A) Feeders must originate in a distribution center. The conductors must be run as multiconductor cord or cable assemblies or within raceways; or, where not subject to physical damage, they may be run as open conductors on insulators not more than 10 feet (3.05 m) apart.

(B) Branch circuits must originate in a power outlet or panelboard. Conductors must be run as multiconductor cord or cable assemblies or open conductors, or must be run in raceways. You must protect all conductors by overcurrent devices at their ampacity. You must locate runs of open conductors where the conductors will not be subject to physical damage, and the conductors must be fastened at intervals not exceeding 10

feet (3.05 m). You must not lay any branch-circuit conductors on the floor. Each branch circuit that supplies receptacles or fixed equipment must contain a separate equipment grounding conductor if the branch circuit is run as open conductors.

(C) Receptacles must be of the grounding type. Unless installed in a complete metallic raceway, each branch circuit must contain a separate equipment grounding conductor, and all receptacles must be electrically connected to the grounding conductor. You must not install receptacles for uses other than temporary lighting on branch circuits which supply temporary lighting. You must not connect receptacles to the same ungrounded conductor of multiwire circuits which supply temporary lighting.

(D) You must install disconnecting switches or plug connectors to permit the disconnection of all ungrounded conductors of each temporary circuit.

(E) You must protect all lamps for general illumination from accidental contact or breakage. Metal-case sockets must be grounded.

(F) Temporary lights must be equipped with hard usage (S or SJ types) electric cords with connections and insulation maintained in safe condition. “Brewery” cord (type CBO or NB) may be substituted for hard usage cord provided it is protected from physical damages. You must not suspend temporary lights by their electric cords unless cords and lights are designed for this means of suspension. Splices must retain the insulation, outer sheath properties, flexibility, and usage characteristics of the cord being spliced.

When pin-type connectors or lampholders are utilized, the area of perforations caused by lampholder removal must be restored to the insulation capabilities of the cord.

(G) You must operate electric lighting used in wet and/or other conductive locations, as for example, drums, tanks, and vessels at 12 volts or less. However, 120-volt lights may be used if protected by a ground-fault circuit interrupter.

(H) You must use a box wherever a change is made to a raceway system or a cable system which is metal clad or metal sheathed.

(I) You must protect flexible cords and cables from damage. You must avoid sharp corners and projections. Flexible cords and cables may pass through doorways or other pinch points, if protection is provided to avoid damage.

(J) Extension cord sets used with portable electric tools and appliances must be of 3-wire type and must be designed for hard or extra-hard usage. Flexible cords used with temporary and portable lights must be designed for hard or extra-hard usage.

Note: The National Electrical Code, ANSI/NFPA 70, in Article 400, Table 400-4, lists various types of flexible cords, some of which are noted as being designed for hard or extra-hard usage. Examples of these types of flexible cords include hard service cord (types S, ST, SO, STO) and junior hard service cord (types SJ, SJO, SJT, SJTO).

(iii) Guarding. For temporary wiring over 600 volts, you must provide nominal, fencing, barriers, or other effective means to prevent access of other than authorized and qualified personnel.

(2) **Cabinets, boxes, and fittings.**

(a) You must protect conductors entering boxes, cabinets, or fittings from abrasion, and you must effectively close openings through which conductor enter. You must also effectively close openings in cabinets, boxes, and fittings.

(b) Covers and canopies. You must provide all pull boxes, junction boxes, and fittings with covers. If metal covers are used, they must be grounded. In energized installations each outlet box must have a cover, faceplate, or fixture canopy. You must provide covers of outlet boxes having holes through which flexible cord pendants pass with bushings designed for the purpose or they must have smooth, well-rounded surfaces on which the cords may bear.

(c) Pull and junction boxes for systems over 600 volts, nominal. In addition to other requirements in this section for pull and junction boxes, the following must apply to these boxes for systems over 600 volts, nominal:

(i) Complete enclosure. Boxes must provide a complete enclosure for the contained conductors or cables.

(ii) Covers. You must close boxes by covers securely fastened in place. Underground box covers that weigh over 100 pounds (43.6 kg) meet this requirement. You must permanently mark covers for boxes “HIGH VOLTAGE.” The marking must be on the outside of the box cover and must be readily visible and legible.

(3) **Knife switches**. Single-throw knife switches must be so connected that the blades are dead when the switch is in the open position. Single-throw knife switches must be so placed that gravity will not tend to close them. You must provide single-throw knife switches approved for use in the inverted position with a locking device that will ensure that the blades remain in the open position when so set. Double-throw knife switches may be mounted so that the throw will be either vertical or horizontal. However, if the throw is vertical, you must provide a locking device to ensure that the blades remain in the open position when so set.

(4) **Switchboards and panelboards**. You must locate switchboards that have any exposed live parts in permanently dry locations and accessible only to qualified persons. You must mount panelboards in cabinets, cutout boxes, or enclosures designed for the purpose and they must be dead front. However, panelboards other than the dead front externally operable type are permitted where accessible only to qualified persons. Exposed blades of knife switches must be dead when open.

(5) **Enclosures for damp or wet locations.**

(a) Cabinets, fittings, and boxes. You must install cabinets, cutout boxes, fittings, boxes, and panelboard enclosures in damp or wet locations so as to prevent moisture or water from entering and accumulating within the enclosures. In wet locations the enclosures must be weatherproof.

(b) Switches and circuit breakers. Switches, circuit breakers, and switchboards installed in wet locations must be enclosed in weatherproof enclosures.

(6) **Conductors for general wiring**. All conductors used for general wiring must be insulated unless otherwise permitted in this part. The conductor insulation must be of a type that is suitable for the voltage, operating temperature, and location of use. Insulated conductors must be distinguishable by appropriate color or other means as being grounded conductors, ungrounded conductors, or equipment grounding conductors.

(7) **Flexible cords and cables.**

(a) Use of flexible cords and cables.

(i) Permitted uses. Flexible cords and cables must be suitable for conditions of use and location. You must use flexible cords and cables only for:

(A) Pendants;

(B) Wiring of fixtures;

(C) Connection of portable lamps or appliances;

(D) Elevator cables;

(E) Wiring of cranes and hoists;

(F) Connection of stationary equipment to facilitate their frequent interchange;

(G) Prevention of the transmission of noise or vibration; or

(H) Appliances where the fastening means and mechanical connections are designed to permit removal for maintenance and repair.

(ii) Attachment plugs for cords. If used as permitted in (a)(i)(C), (F), or (H) of this subsection, the flexible cord must be equipped with an attachment plug and must be energized from a receptacle outlet.

(iii) Prohibited uses. Unless necessary for a use permitted in (a)(i) of this subsection, flexible cords and cables must not be used:

(A) As a substitute for the fixed wiring of a structure;

(B) Where run through holes in walls, ceilings, or floors;

(C) Where run through doorways, windows, or similar openings, except as permitted in subsection (1)(b)(ii)(I) of this section;

(D) Where attached to building surfaces; or

(E) Where concealed behind building walls, ceilings, or floors.

(b) Identification, splices, and terminations.

(i) Identification. A conductor of a flexible cord or cable that is used as a grounded conductor or an equipment grounding conductor must be distinguishable from other conductors.

(ii) Marking. You must not use type SJ, SJO, SJT, SJTO, S, SO, ST, and STO cords unless durably marked on the surface with the type designation, size, and number of conductors.

(iii) Splices. You must use only flexible cords in continuous lengths without splice or tap. Hard service flexible cords No. 12 or larger may be repaired if spliced so that the splice retains the insulation, outer sheath properties, and usage characteristics of the cord being spliced.

(iv) Strain relief. You must connect flexible cords to devices and fittings so that strain relief is provided which will prevent pull from being directly transmitted to joints or terminal screws.

(v) Cords passing through holes. You must protect flexible cords and cables by bushings or fittings where passing through holes in covers, outlet boxes, or similar enclosures.

(vi) Trailing cables must be protected from damage.

(vii) You must cover or elevate cord and cable passing through work areas to protect it from damage which would create a hazard to employees.

(8) **Portable cables over 600 volts, nominal**. Multi-conductor portable cable for use in supplying power to portable or mobile equipment at over 600 volts, nominal, must consist of No. 8 or larger conductors employing flexible stranding. You must shield cables operated at over 2000 volts for the purpose of confining the voltage stresses to the insulation. You must provide grounding conductors. Connectors for these cables must be of a locking type with provisions to prevent their opening or closing while energized. You must provide strain relief at connections and terminations. You must not operate portable cables with splices unless the splices are of the permanent molded, vulcanized, or other equivalent type. Termination enclosures must be marked with a high voltage hazard warning, and terminations must be accessible only to authorized and qualified personnel.

(9) **Fixture wires.**

(a) General. Fixture wires must be suitable for the voltage, temperature, and location of use. You must identify a fixture wire which is used as a grounded conductor.

(b) Uses permitted. Fixture wires may be used:

(i) For installation in lighting, fixtures and in similar equipment where enclosed or protected and not subject to bending or twisting in use; or

(ii) For connecting lighting fixtures to the branch-circuit conductors supplying the fixtures.

(c) Uses not permitted. You must not use fixture wires as branch-circuit conductors except as permitted for Class 1 power-limited circuits.

(10) **Equipment for general use.**

(a) Lighting fixtures, lampholders, lamps, and receptacles.

(i) Live parts. Fixtures, lampholders, lamps, rosettes, and receptacles must have no live parts normally exposed to employee contact. However, rosettes and cleat-type lampholders and receptacles located at least 8 feet (2.44 m) above the floor may have exposed parts.

(ii) Support. Fixtures, lampholders, rosettes, and receptacles must be securely supported. A fixture that weighs more than 6 pounds (2.72 kg) or exceeds 16 inches (406 mm) in any dimension must not be supported by the screw shell of a lampholder.

(iii) Portable lamps. Portable lamps must be wired with flexible cord and an attachment plug of the polarized or grounding type. If the portable lamp uses an Edison-based lampholder, the grounded conductor must be identified and attached to the screw shell and the identified blade of the attachment plug. In addition, portable handlamps must comply with the following:

(A) You must not use metal shell, paperlined lampholders;

(B) Handlamps must be equipped with a handle of molded composition or other insulating material;

(C) Handlamps must be equipped with a substantial guard attached to the lampholder or handle;

(D) Metallic guards must be grounded by the means of an equipment grounding conductor run within the power supply cord.

(iv) Lampholders. You must install lampholders of the screw-shell type for use as lampholders only. Lampholders installed in wet or damp locations must be of the weatherproof type.

(v) Fixtures. You must identify fixtures installed in wet or damp locations for the purpose and you must install them so that water cannot enter or accumulate in wireways, lampholders, or other electrical parts.

(b) Receptacles, cord connectors, and attachment plugs (caps).

(i) Configuration. Receptacles, cord connectors, and attachment plugs must be constructed so that no receptacle or cord connector will accept an attachment plug with a different voltage or current rating than that for which the device is intended. However, a 20-ampere T-slot receptacle or cord connector may accept a 15-ampere attachment plug of the same voltage rating. Receptacles connected to circuits having different voltages, frequencies, or types of current (AC or DC) on the same premises must be of such design that the attachment plugs used on these circuits are not interchangeable.

(ii) Damp and wet locations. A receptacle installed in a wet or damp location must be designed for the location.

(c) Appliances.

(i) Live parts. Appliances, other than those in which the current-carrying parts at high temperatures are necessarily exposed, must have no live parts normally exposed to employee contact.

(ii) Disconnecting means. You must provide a means to disconnect each appliance.

(iii) Rating. Each appliance must be marked with its rating in volts and amperes or volts and watts.

(d) Motors. This subdivision applies to motors, motor circuits, and controllers.

(i) In sight from. If specified that one piece of equipment must be "in sight from" another piece of equipment, one must be visible and not more than 50 feet (15.2 m) from the other.

(ii) Disconnecting means.

(A) You must locate a disconnecting means in sight from the controller location. The controller disconnecting means for motor branch circuits over 600 volts, nominal, may be out of sight of the controller, if the controller is marked with a warning label giving the location and identification of the disconnecting means which is to be locked in the open position.

(B) The disconnecting means must disconnect the motor and the controller from all ungrounded supply conductors and must be so designed that no pole can be operated independently.

(C) If a motor and the driven machinery are not in sight from the controller location, the installation must comply with one of the following conditions:

(I) The controller disconnecting means must be capable of being locked in the open position.

(II) You must place a manually operable switch that will disconnect the motor from its source of supply in sight from the motor location.

(D) The disconnecting means must plainly indicate whether it is in the open (off) or closed (on) position.

(E) The disconnecting means must be readily accessible. If more than one disconnect is provided for the same equipment, only one need be readily accessible.

(F) You must provide an individual disconnecting means for each motor, but a single disconnecting means may be used for a group of motors under any one of the following conditions:

(I) If a number of motors drive special parts of a single machine or piece of apparatus, such as a metal or woodworking machine, crane, or hoist;

(II) If a group of motors is under the protection of one set of branch-circuit protective devices; or

(III) If a group of motors is in a single room in sight from the location of the disconnecting means.

(iii) Motor overload, short-circuit, and ground-fault protection. You must protect motors, motor-control apparatus, and motor branch-circuit conductors against overheating due to motor overloads or failure to start, and against short-circuits or ground faults. These provisions do not require overload protection that will stop a motor where a shutdown is likely to introduce additional or increased hazards, as in the case of fire pumps, or where continued operation of a motor is necessary for a safe shutdown of equipment or process and motor overload sensing devices are connected to a supervised alarm.

(iv) Protection of live parts-All voltages.

(A) Stationary motors having commutators, collectors, and brush rigging located inside of motor end brackets and not conductively connected to supply circuits operating at more than 150 volts to ground need not have such parts guarded. Exposed live parts of motors and controllers operating at 50 volts or more between terminals must be guarded against accidental contact by any of the following:

(I) By installation in a room or enclosure that is accessible only to qualified persons;

(II) By installation on a balcony, gallery, or platform, so elevated and arranged as to exclude unqualified persons; or

(III) By elevation 8 feet (2.44 m) or more above the floor.

(B) Where live parts of motors or controllers operating at over 150 volts to ground are guarded against accidental contact only by location, and where adjustment or other attendance may be necessary during the operation of the apparatus, insulating mats or platforms must be provided so that the attendant cannot readily touch live parts unless standing on the mats or platforms.

(e) Transformers.

(i) Application. The following subsections cover the installation of all transformers, except:

(A) Current transformers;

(B) Dry-type transformers installed as a component part of other apparatus;

(C) Transformers which are an integral part of an x-ray, high frequency, or electrostatic-coating apparatus;

(D) Transformers used with Class 2 and Class 3 circuits, sign and outline lighting, electric discharge lighting, and power-limited fire-protective signaling circuits.

(ii) Operating voltage. The operating voltage of exposed live parts of transformer installations must be indicated by warning signs or visible markings on the equipment or structure.

(iii) Transformers over 35 kV. Dry-type, high fire point liquid-insulated, and askarel-insulated transformers installed indoors and rated over 35 kV must be in a vault.

(iv) Oil-insulated transformers. If they present a fire hazard to employees, oil-insulated transformers installed indoors must be in a vault.

(v) Fire protection. You must safeguard combustible material, combustible buildings and parts of buildings, fire escapes, and door and window openings from fires which may originate in oil-insulated transformers attached to or adjacent to a building or combustible material.

(vi) Transformer vaults. Transformer vaults must be constructed so as to contain fire and combustible liquids within the vault and to prevent unauthorized access. You must arrange locks and latches so that a vault door can be readily opened from the inside.

(vii) Pipes and ducts. Any pipe or duct system foreign to the vault installation must not enter or pass through a transformer vault.

(viii) Material storage. You must not store materials in transformer vaults.

(f) Capacitors.

(i) Drainage of stored charge. You must provide all capacitors, except surge capacitors or capacitors included as a component part of other apparatus, with an automatic means of draining the stored charge and maintaining the discharged state after the capacitor is disconnected from its source of supply.

(ii) Over 600 volts. Capacitors rated over 600 volts, nominal, must comply with the following additional requirements:

(A) Isolating or disconnecting switches (with no interrupting rating) must be interlocked with the load interrupting device or you must provide them with prominently displayed caution signs to prevent switching load current.

(B) For series capacitors the proper switching must be assured by use of at least one of the following:

(I) Mechanically sequenced isolating and bypass switches;

(II) Interlocks; or

(III) Switching procedure prominently displayed at the switching location.

[Statutory Authority: RCW 49.17.010, .040, .050, and .060. 16-09-085 (Order 15-08), § 296-155-449, filed 04/19/16, effective, 05/20/16. Statutory Authority: Chapter 49.17 RCW. 93-19-142 (Order 93-04), § 296-155-449, filed 9/22/93, effective 11/1/93; 92-23-017 (Order 92-13), § 296-155-449, filed 11/10/92, effective 12/18/92; 88-11-021 (Order 88-04), § 296-155-449, filed 5/11/88.]

WAC 296-155-452 Specific purpose equipment and installations.

(1) **Cranes and hoists**. This subsection applies to the installation of electric equipment and wiring used in connection with cranes, monorail hoists, hoists, and all runways.

(a) Disconnecting means.

(i) Runway conductor disconnecting means. You must provide a readily accessible disconnecting means between the runway contact conductors and the power supply.

(ii) Disconnecting means for cranes and monorail hoists. You must provide a disconnecting means, capable of being locked in the open position, in the leads from the runway contact conductors or other power supply on any crane or monorail hoist.

(A) If this additional disconnecting means is not readily accessible from the crane or monorail hoist operating station, you must provide means at the operating station to open the power circuit to all motors of the crane or monorail hoist.

(B) The additional disconnect may be omitted if a monorail hoist or hand-propelled crane bridge installation meets all of the following:

(I) The unit is floor controlled;

(II) The unit is within view of the power supply disconnecting means; and

(III) No fixed work platform has been provided for servicing the unit.

(b) Control. You must provide a limit switch or other device to prevent the load block from passing the safe upper limit of travel of any hoisting mechanism.

(c) Clearance. The dimension of the working space in the direction of access to live parts which may require examination, adjustment, servicing, or maintenance while live must be a minimum of two feet 6 inches (762 mm). Where controls are enclosed in cabinets, the door(s) must open at least 90 degrees or be removable, or the installation must provide equivalent access.

(d) Grounding. All exposed metal parts of cranes, monorail hoists, hoists and accessories including pendant controls must be metallically joined together into a continuous electrical conductor so that the entire crane or hoist will be grounded in accordance with WAC 296-155-447(6). Moving parts, other than removable accessories or attachments, having metal-to-metal bearing surfaces must be considered to be electrically connected to each other through the bearing surfaces for grounding purposes. The trolley frame and bridge frame must be considered as electrically grounded through the bridge and trolley wheels and its respective tracks unless conditions such as paint or other insulating materials prevent reliable metal-to-metal contact. In this case you must provide a separate bonding conductor must be provided.

(2) **Elevators, escalators, and moving walks.**

(a) Disconnecting means. Elevators, escalators, and moving walks must have a single means for disconnecting all ungrounded main power supply conductors for each unit.

(b) Control panels. If control panels are not located in the same space as the drive machine, they must be located in cabinets with doors or panels capable of being locked closed.

(3) **Electric welders-Disconnecting means**.

(a) Motor-generator, AC transformer, and DC rectifier arc welders. You must provide a disconnecting means in the supply circuit for each motor-generator arc welder, and for each AC transformer and DC rectifier arc welder which is not equipped with a disconnect mounted as an integral part of the welder.

(b) Resistance welders. You must provide a switch or circuit breaker by which each resistance welder and its control equipment can be isolated from the supply circuit. The ampere rating of this disconnecting means must not be less than the supply conductor ampacity.

(4) **X-ray equipment**.

(a) Disconnecting means.

(i) General. You must provide a disconnecting means in the supply circuit. The disconnecting means must be operable from a location readily accessible from the x-ray control. For equipment connected to a 120-volt branch circuit of 30 amperes or less, a grounding-type attachment plug cap and receptacle of proper rating may serve as a disconnecting means.

(ii) More than one piece of equipment. If more than one piece of equipment is operated from the same high-voltage circuit, you must provide each piece or each group of equipment as a unit with a high-voltage switch or equivalent disconnecting means. This disconnecting means must be constructed, enclosed, or located so as to avoid contact by employees with its live parts.

(b) Control-radiographic and fluoroscopic types. Radiographic and fluoroscopic-type equipment must be effectively enclosed or must have interlocks that deenergize the equipment automatically to prevent ready access to live current-carrying parts.

[Statutory Authority: RCW 49.17.010, .040, .050, and .060. 16-09-085 (Order 15-08), § 296-155-452, filed 04/19/16, effective, 05/20/16. Statutory Authority: RCW 49.17.010, .040, .050, and .060. 06-05-027 (Order 05-45), § 296-155-452, filed 02/07/06, effective 04/01/06. Statutory Authority: Chapter 49.17 RCW. 88-11-021 (Order 88-04), § 296-155-452, filed 5/11/88.]

WAC 296-155-456 Hazardous (classified) locations.

(1) **Scope**. This section sets forth requirements for electric equipment and wiring in locations which are classified depending on the properties of the flammable vapors, liquids or gases, or combustible dusts or fibers which may be present therein and the likelihood that a flammable or combustible concentration or quantity is present. Each room, section or area must be considered individually in determining its classification. These hazardous (classified) locations are assigned 6 designations as follows: Class I, Division 1; Class I, Division 2; Class II, Division 1; Class II, Division 2; Class III, Division 1; Class III, Division 2. For definitions of these locations see WAC 296-155-462. All applicable requirements in this part apply to all hazardous (classified) locations, unless modified by provisions of this section.

(a) You must choose all components and utilization equipment used in a hazardous location from among those listed by a nationally recognized testing laboratory, such as Underwriters' Laboratories, Inc., or Factory Mutual Engineering Corp., except custom-made components and utilization equipment.

(b) You must not install or intermix equipment approved for a specific hazardous location with equipment approved for another specific hazardous location.

(2) **Electrical installations**. Equipment, wiring methods, and installations of equipment in hazardous (classified) locations must be approved as intrinsically safe or approved for the hazardous (classified) location or safe for the hazardous (classified) location. Requirements for each of these options are as follows:

(a) Intrinsically safe. Equipment and associated wiring approved as intrinsically safe is permitted in any hazardous (classified) location included in its listing or labeling.

(b) Approved for the hazardous (classified) location.

(i) General. Equipment must be approved not only for the class of location but also for the ignitible or combustible properties of the specific gas, vapor, dust, or fiber that will be present.

Note:	*NFPA 70, the National Electrical Code, lists or defines hazardous gases, vapors, and dusts by "groups" characterized by their ignitible or combustible properties.*

(ii) Marking. You must not use equipment unless it is marked to show the class, group, and operating temperature or temperature range, based on operation in a 40°C ambient, for which it is approved. The temperature marking must not exceed the ignition temperature of the specific gas, vapor, or dust to be encountered. However, the following provisions modify this marking requirement for specific equipment:

(A) Equipment of the nonheat-producing type (such as junction boxes, conduit, and fitting) and equipment of the heat-producing type having a maximum temperature of not more than 100°C (212°F) need not have a marked operating temperature or temperature range.

(B) Fixed lighting fixtures marked for use only in Class I, Division 2 locations need not be marked to indicate the group.

(C) Fixed general-purpose equipment in Class I locations, other than lighting fixtures, which is acceptable for use in Class I, Division 2 locations need not be marked with the class, group, division, or operating temperature.

(D) Fixed dust-tight equipment, other than lighting fixtures, which is acceptable for use in Class II, Division 2 and Class III locations need not be marked with the class, group, division, or operating temperature.

(c) Safe for the hazardous (classified) location. Equipment which is safe for the location must be of a type and design which you demonstrate will provide protection from the hazards arising from the combustibility and flammability of vapors, liquids, gases, dusts, or fibers.

Note: The National Electrical Code, NFPA 70, contains guidelines for determining the type and design of equipment and installations which will meet this requirement. The guidelines of this document address electric wiring, equipment, and systems installed in hazardous (classified) locations and contain specific provisions for the following: Wiring methods, wiring connections, conductor insulation, flexible cords, sealing and drainage, transformers, capacitors, switches, circuit breakers, fuses, motor controllers, receptacles, attachment plugs, meters, relays, instruments, resistors, generators, motors, lighting fixtures, storage battery charging equipment, electric cranes, electric hoists and similar equipment, utilization equipment, signaling systems, alarm systems, remote control systems, local loud speaker and communication systems, ventilation piping, live parts, lightning surge protection, and grounding. Compliance with these guidelines will constitute one means, but not the only means, of compliance with this subsection.

(3) **Conduits**. All conduits must be threaded and must be made wrench-tight. Where it is impractical to make a threaded joint tight, you must utilize a bonding jumper.

[Statutory Authority: RCW 49.17.010, .040, .050, and .060. 16-09-085 (Order 15-08), § 296-155-456, filed 04/19/16, effective, 05/20/16. Statutory Authority: RCW 49.17.010, .020, .040, .050, and .060. 07-03-163 (Order 06-30), § 296-155-456, filed 01/24/07, effective 04/01/07. Statutory Authority: Chapter 49.17 RCW. 88-11-021 (Order 88-04), § 296-155-456, filed 5/11/88.]

WAC 296-155-459 Special systems.

(1) **Systems over 600 volts, nominal**. (a) through (d) of this subsection contain general requirements for all circuits and equipment operated at over 600 volts.

(a) Wiring methods for fixed installations.

(i) Above ground. You must install above-ground conductors in rigid metal conduit, in intermediate metal conduit, in cable trays, in cablebus, in other suitable raceways, or as open runs of metal-clad cable designed for the use and purpose. However, open runs of nonmetallic-sheathed cable or of bare conductors or busbars may be installed in locations which are accessible only to qualified persons. Metallic shielding components, such as tapes, wires, or braids for conductors, must be grounded. Open runs of insulated wires and cables having a bare lead sheath or a braided outer covering must be supported in a manner designed to prevent physical damage to the braid or sheath.

(ii) Installations emerging from the ground. Conductors emerging from the ground must be enclosed in raceways. Raceways installed on poles must be of rigid metal conduit, intermediate metal conduit, PVC schedule 80 or equivalent extending from the ground line up to a point 8 feet (2.44 m) above finished grade. You must protect conductors entering a building by an enclosure from the ground line to the point of entrance. Metallic enclosures must be grounded.

(b) Interrupting and isolating devices.

(i) Circuit breakers. Circuit breakers located indoors must consist of metal-enclosed or fire-resistant, cell-mounted units. In locations accessible only to qualified personnel, open mounting of circuit breakers is permitted. You must provide a means of indicating the open and closed position of circuit breakers.

(ii) Fused cutouts. Fused cutouts installed in buildings or transformer vaults must be of a type identified for the purpose. You must ensure they are readily accessible for fuse replacement.

(iii) Equipment isolating means. You must provide a means to completely isolate equipment for inspection and repairs. Isolating means which are not designed to interrupt the load current of the circuit must be either interlocked with a circuit interrupter or provided with a sign warning against opening them under load.

(c) Mobile and portable equipment.

(i) Power cable connections to mobile machines. You must provide a metallic enclosure on the mobile machine for enclosing the terminals of the power cable. The enclosure must include provisions for a solid connection for the ground wire(s) terminal to ground effectively the machine frame. The method of cable termination used must prevent any strain or pull on the cable from stressing the electrical connections. The enclosure must have provision for locking so only authorized qualified persons may open it and must be marked with a sign warning of the presence of energized parts.

(ii) Guarding live parts. All energized switching and control parts must be enclosed in effectively grounded metal cabinets or enclosures. Circuit breakers and protective equipment must have the operating means projecting through the metal cabinet or enclosure so these units can be reset without locked doors being opened. You must lock enclosures and metal cabinets so that only authorized qualified persons have access and must be marked with a sign warning of the presence of energized parts. Collector ring assemblies on revolving-type machines (shovels, draglines, etc.) must be guarded.

(d) Tunnel installations.

(i) Application. The provisions of this item apply to installation and use of high-voltage power distribution and utilization equipment which is associated with tunnels and which is portable and/or mobile, such as substations, trailers, cars, mobile shovels, draglines, hoists, drills, dredges, compressors, pumps, conveyors, and underground excavators.

(ii) Conductors. You must install conductors in tunnels in one or more of the following:

(A) Metal conduit or other metal raceway;

(B) Type MC cable; or

(C) Other suitable multiconductor cable.

You must also locate or guard conductors so as to protect them from physical damage. Multiconductor portable cable may supply mobile equipment. An equipment grounding conductor must be run with circuit conductors inside the metal raceway or inside the multiconductor cable jacket. The equipment grounding conductor may be insulated or bare.

(iii) Guarding live parts. Bare terminals of transformers, switches, motor controllers, and other equipment must be enclosed to prevent accidental contact with energized parts. Enclosures for use in tunnels must be drip-proof, weatherproof, or submersible as required by the environmental conditions.

(iv) Disconnecting means. You must install a disconnecting means that simultaneously opens all ungrounded conductors at each transformer or motor location.

(v) Grounding and bonding. All nonenergized metal parts of electric equipment and metal raceways and cable sheaths must be grounded and bonded to all metal pipes and rails at the portal and at intervals not exceeding 1000 feet (305 m) throughout the tunnel.

(2) **Class 1, Class 2, and Class 3 remote control, signaling, and power-limited circuits.**

(a) Classification. Class 1, Class 2, or Class 3 remote control, signaling, or power-limited circuits are characterized by their usage and electrical power limitation which differentiates them from light and power circuits. These circuits are classified in accordance with their respective voltage and power limitations as summarized in (a)(i) through (iii) of this subsection.

(i) Class 1 circuits.

(A) A Class 1 power-limited circuit is supplied from a source having a rated output of not more than 30 volts and 1000 volt-amperes.

(B) A Class 1 remote control circuit or a Class 1 signaling circuit has a voltage which does not exceed 600 volts; however, the power output of the source need not be limited.

(ii) Class 2 and Class 3 circuits.

(A) Power for Class 2 and Class 3 circuits is limited either inherently (in which no overcurrent protection is required) or by a combination of a power source and overcurrent protection.

(B) The maximum circuit voltage is 150 volts AC or DC for a Class 2 inherently limited power source, and 100 volts AC or DC for a Class 3 inherently limited power source.

(C) The maximum circuit voltage is 30 volts AC and 60 volts DC for a Class 2 power source limited by overcurrent protection, and 150 volts AC or DC for a Class 3 power source limited by overcurrent protection.

(iii) Application. The maximum circuit voltages in (a)(i) and (ii) of this subsection apply to sinusoidal AC or continuous DC power sources, and where wet contact occurrence is not likely.

(b) Marking. You must not use a Class 2 or Class 3 power supply unit unless it is durably marked where plainly visible to indicate the class of supply and its electrical rating.

(3) **Communications systems.**

(a) Scope. These provisions for communication systems apply to such systems as central-station-connected and noncentral-station-connected telephone circuits, radio receiving and transmitting equipment, and outside wiring for fire and burglar alarm, and similar central station systems. These installations need not comply with the provisions of WAC 296-155-444 through 296-155-459(2), except WAC 296-155-447 (3)(a)(ii) and 296-155-456.

(b) Protective devices.

(i) Circuits exposed to power conductors. Communication circuits so located as to be exposed to accidental contact with light or power conductors operating at over 300 volts must have each circuit so exposed provided with an approved protector.

(ii) Antenna lead-ins. You must provide each conductor of a lead-in from an outdoor antenna with an antenna discharge unit or other means that will drain static charges from the antenna system.

(c) Conductor location.

(i) Outside of buildings.

(A) Receiving distribution lead-in or aerial-drop cables attached to buildings and lead-in conductors to radio transmitters must be so installed as to avoid the possibility of accidental contact with electric light or power conductors.

(B) The clearance between lead-in conductors and any lightning protection conductors must not be less than 6 feet (1.83 m).

(ii) On poles. Where practicable, you must locate communication conductors on poles below the light or power conductors. You must not attach communications conductors to a crossarm that carries light or power conductors.

(iii) Inside of buildings. You must locate indoor antennas, lead-ins, and other communication conductors attached as open conductors to the inside of buildings at least two inches (50.8 mm) from conductors of any light or power or Class 1 circuits unless a special and equally protective method of conductor separation is employed.

(d) Equipment location. You must locate outdoor metal structures supporting antennas, as well as self-supporting antennas such as vertical rods or dipole structures, as far away from overhead conductors of electric light and power circuits of over 150 volts to ground as necessary to avoid the possibility of the antenna or structure falling into or making accidental contact with such circuits.

(e) Grounding.

(i) Lead-in conductors. If exposed to contact with electric light or power conductors, the metal sheath of aerial cables entering buildings must be grounded or must be interrupted close to the entrance to the building by an insulating joint or equivalent device. Where protective devices are used, they must be grounded.

(ii) Antenna structures. Masts and metal structures supporting antennas must be permanently and effectively grounded without splice or connection in the grounding conductor.

(iii) Equipment enclosures. Transmitters must be enclosed in a metal frame or grill or separated from the operating space by a barrier, all metallic parts of which are effectively connected to ground. All external metal handles and controls accessible to the operating personnel must be effectively grounded. Unpowered equipment and enclosures must be considered grounded where connected to an attached coaxial cable with an effectively grounded metallic shield.

[Statutory Authority: RCW 49.17.010, .040, .050, and .060. 16-09-085 (Order 15-08), § 296-155-459, filed 04/19/16, effective, 05/20/16. Statutory Authority: Chapter 49.17 RCW. 93-19-142 (Order 93-04), § 296-155-459, filed 9/22/93, effective 11/1/93; 88-11-021 (Order 88-04), § 296-155-459, filed 5/11/88.]

WAC 296-155-462 Definitions applicable to this part.

The definitions given in this section apply to the terms used in Part I. The definitions given here for "approved" and "qualified person" apply, instead of the definitions given in WAC 296-155-012, to the use of these terms in Part I.

Acceptable. An installation or equipment is acceptable to the director, and approved within the meaning of this Part I:

- If it is accepted, certified, listed, labeled, or otherwise determined to be safe by a qualified testing laboratory capable of determining the suitability of materials and equipment for installation and use in accordance with this standard; or
- With respect to an installation or equipment of a kind which no qualified testing laboratory accepts, certifies, lists, labels, or determines to be safe, if it is inspected or tested by another state agency, or by a federal, municipal, or other local authority responsible for enforcing occupational safety provisions of the National Electrical Code, and found in compliance with those provisions; or
- With respect to custom-made equipment or related installations which are designed, fabricated for, and intended for use by a particular customer, if it is determined to be safe for its intended use by its manufacturer on the basis of test data which you keep and make available for inspection to the director and his/her authorized representatives.

Accepted. An installation is "accepted" if it has been inspected and found to be safe by a qualified testing laboratory.

Accessible. (As applied to wiring methods.) Capable of being removed or exposed without damaging the building structure or finish, or not permanently closed in by the structure or finish of the building. (See "concealed" and "exposed.")

Accessible. (As applied to equipment.) Admitting close approach; not guarded by locked doors, elevation, or other effective means. (See "readily accessible.")

Ampacity. The current in amperes a conductor can carry continuously under the conditions of use without exceeding its temperature rating.

Appliances. Utilization equipment, generally other than industrial, normally built in standardized sizes or types, which is installed or connected as a unit to perform one or more functions.

Approved. Approved by the director of the department of labor and industries or their authorized representative: Provided, however, That should a provision of this chapter state that approval by an agency or organization other than the department of labor and industries is required, such as Underwriters' Laboratories, the Bureau of Mines, or Mine Safety and Health Administration (MSHA) and the National Institute for Occupational Safety and Health (NIOSH) the provisions of WAC 296-155-006 must apply.

Askarel. A generic term for a group of nonflammable synthetic chlorinated hydrocarbons used as electrical insulating media. Askarels of various compositional types are used. Under arcing conditions the gases produced, while consisting predominantly of noncombustible hydrogen chloride, can include varying amounts of combustible gases depending upon the askarel type.

Attachment plug (plug cap) (cap) A device which, by insertion in a receptacle, establishes connection between the conductors of the attached flexible cord and the conductors connected permanently to the receptacle.

Automatic. Self-acting, operating by its own mechanism when actuated by some impersonal influence, as for example, a change in current strength, pressure, temperature, or mechanical configuration.

Bare conductor. See "conductor."

Bonding. The permanent joining of metallic parts to form an electrically conductive path which will assure electrical continuity and the capacity to conduct safely any current likely to be imposed.

Bonding jumper. A reliable conductor to assure the required electrical conductivity between metal parts required to be electrically connected.

Branch circuits. That portion of a wiring system extending beyond the final overcurrent device protecting the circuit. (A device not approved for branch circuit protection, such as thermal cutout or motor overload protective device, is not considered as the overcurrent device protecting the circuit.)

Building. A structure which stands alone or which is cut off from adjoining structures by fire walls with all openings therein protected by approved fire doors.

Cabinet. An enclosure designed either for surface or flush mounting, and provided with a frame, mat, or trim in which a swinging door or doors are or may be hung.

Certified. Equipment is "certified" if it:

- Has been tested and found by a qualified testing laboratory to meet applicable test standards or to be safe for use in a specified manner; and
- Is of a kind whose production is periodically inspected by a qualified testing laboratory. Certified equipment must bear a label, tag, or other record of certification.

Circuit breaker.

- (600 volts nominal, or less.) A device designed to open and close a circuit by nonautomatic means and to open the circuit automatically on a predetermined overcurrent without injury to itself when properly applied within its rating.
- (Over 600 volts, nominal.) A switching device capable of making, carrying, and breaking currents under normal circuit conditions, and also making, carrying for a specified time, and breaking currents under specified abnormal circuit conditions, such as those of short circuit.

Class I locations. Class I locations are those in which flammable gases or vapors are or may be present in the air in quantities sufficient to produce explosive or ignitible mixtures. Class I locations include the following:

- Class I, Division 1. A Class I, Division 1 location is a location:
  - In which ignitible concentrations of flammable gases or vapors may exist under normal operating conditions; or
  - In which ignitible concentrations of such gases or vapors may exist frequently because of repair or maintenance operations or because of leakage; or

- In which breakdown or faulty operation of equipment or processes might release ignitible concentrations of flammable gases or vapors, and might also cause simultaneous failure of electric equipment.

> *Note: This classification usually includes locations where volatile flammable liquids or liquefied flammable gases are transferred from one container to another; interiors of spray booths and areas in the vicinity of spraying and painting operations where volatile flammable solvents are used; locations containing open tanks or vats of volatile flammable liquids; drying rooms or compartments for the evaporation of flammable solvents; inadequately ventilated pump rooms for flammable gas or for volatile flammable liquids; and all other locations where ignitible concentrations of flammable vapors or gases are likely to occur in the course of normal operations.*

- Class I, Division 2. A Class I, Division 2 location is a location:
  - In which volatile flammable liquids or flammable gases are handled, processed, or used, but in which the hazardous liquids, vapors, or gases will normally be confined within closed containers or closed systems from which they can escape only in case of accidental rupture or breakdown of such containers or systems, or in case of abnormal operation of equipment; or
  - In which ignitible concentrations of gases or vapors are normally prevented by positive mechanical ventilation, and which might become hazardous through failure or abnormal operations of the ventilating equipment; or
  - That is adjacent to a Class I, Division 1 location, and to which ignitible concentrations of gases or vapors might occasionally be communicated unless such communication is prevented by adequate positive-pressure ventilation from a source of clean air, and effective safeguards against ventilation failure are provided.

> *Note: This classification usually includes locations where volatile flammable liquids or flammable gases or vapors are used, but which would become hazardous only in case of an accident or of some unusual operating condition. The quantity of flammable material that might escape in case of accident, the adequacy of ventilating equipment, the total area involved, and the record of the industry or business with respect to explosions or fires are all factors that merit consideration in determining the classification and extent of each location.*

Piping without valves, checks, meters, and similar devices would not ordinarily introduce a hazardous condition even though used for flammable liquids or gases. Locations used for the storage of flammable liquids or of liquefied or compressed gases in sealed containers would not normally be considered hazardous unless also subject to other hazardous conditions.

Electrical conduits and their associated enclosures separated from process fluids by a single seal or barrier are classed as a Division 2 location if the outside of the conduit and enclosures is a nonhazardous location.

Class II locations. Class II locations are those that are hazardous because of the presence of combustible dust. Class II locations include the following:

- Class II, Division 1. A Class II, Division 1 location is a location:
  - In which combustible dust is or may be in suspension in the air under normal operating conditions, in quantities sufficient to produce explosive or ignitible mixtures; or
  - Where mechanical failure or abnormal operation of machinery or equipment might cause such explosive or ignitible mixtures to be produced, and might also provide a source of ignition through simultaneous failure of electric equipment, operation of protection devices, or from other causes; or
  - In which combustible dusts of an electrically conductive nature may be present.

> *Note: Combustible dusts which are electrically nonconductive include dusts produced in the handling and processing of grain and grain products, pulverized sugar and cocoa, dried egg and milk powders, pulverized spices, starch and pastes, potato and woodflour, oil meal from beans and seed, dried hay, and other organic materials which may produce combustible dusts when processed or handled. Dusts containing magnesium or aluminum are particularly hazardous and the use of extreme caution is necessary to avoid ignition and explosion.*

- Class II, Division 2. A Class II, Division 2 location is a location in which:
  - Combustible dust will not normally be in suspension in the air in quantities sufficient to produce explosive or ignitible mixtures, and dust accumulations are normally insufficient to interfere with the normal operation of electrical equipment or other apparatus; or
  - Dust may be in suspension in the air as a result of infrequent malfunctioning of handling or processing equipment, and dust accumulations resulting therefrom may be ignitible by abnormal operation or failure of electrical equipment or other apparatus.

> *Note: This classification includes locations where dangerous concentrations of suspended dust would not be likely but where dust accumulations might form on or in the vicinity of electric equipment. These areas may contain equipment from which appreciable quantities of dust would escape under abnormal operating conditions or be adjacent to a Class II, Division 1 location, as described above, into which an explosive or ignitible concentration of dust may be put into suspension under abnormal operating conditions.*

Class III locations. Class III locations are those that are hazardous because of the presence of easily ignitible fibers or flyings but in which such fibers or flyings are not likely to be in suspension in the air in quantities sufficient to produce ignitible mixtures. Class III locations include the following:

- Class III, Division 1. A Class III, Division 1 location is a location in which easily ignitible fibers or materials producing combustible flyings are handled, manufactured, or used.

Note:	*Easily ignitible fibers and flyings include rayon, cotton (including cotton linters and cotton waste), sisal or henequen, istle, jute, hemp, tow, cocoa fiber, oakum, baled waste kapok, Spanish moss, excelsior, sawdust, woodchips, and other material of similar nature.*

- Class III, Division 2. A Class III, Division 2 location is a location in which easily ignitible fibers are stored or handled, except in process of manufacture. Collector ring. A collector ring is an assembly of slip rings for transferring electrical energy from a stationary to a rotating member.

Collector ring. A collector ring is an assembly of slip rings for transferring electrical energy from a stationary to a rotating member.

Concealed. Rendered inaccessible by the structure or finish of the building. Wires in concealed raceways are considered concealed, even though they may become accessible by withdrawing them. See "accessible. (As applied to wiring methods.)"

Conductor.

- **Bare.** A conductor having no covering or electrical insulation whatsoever.
- **Covered.** A conductor encased within material of composition or thickness that is not recognized as electrical insulation.
- **Insulated.** A conductor encased within material of composition and thickness that is recognized as electrical insulation.

Controller. A device or group of devices that serves to govern, in some predetermined manner, the electric power delivered to the apparatus to which it is connected.

Covered conductor. See "conductor."

Cutout. (Over 600 volts, nominal.) An assembly of a fuse support with either a fuseholder, fuse carrier, or disconnecting blade. The fuseholder or fuse carrier may include a conducting element (fuse link), or may act as the disconnecting blade by the inclusion of a nonfusible member.

Cutout box. An enclosure designed for surface mounting and having swinging doors or covers secured directly to and telescoping with the walls of the box proper. (See "cabinet.")

Damp location. See "location."

Dead front. Without live parts exposed to a person on the operating side of the equipment.

Device. A unit of an electrical system which is intended to carry but not utilize electric energy.

Disconnecting means. A device, or group of devices, or other means by which the conductors of a circuit can be disconnected from their source of supply.

Disconnecting (or isolating) switch. (Over 600 volts, nominal.) A mechanical switching device used for isolating a circuit or equipment from a source of power.

Dry location. See "location."

Enclosed. Surrounded by a case, housing, fence or walls which will prevent persons from accidentally contacting energized parts.

Enclosure. The case or housing of apparatus, or the fence or walls surrounding an installation to prevent personnel from accidentally contacting energized parts, or to protect the equipment from physical damage.

Equipment. A general term including material, fittings, devices, appliances, fixtures, apparatus, and the like, used as a part of, or in connection with, an electrical installation.

Equipment grounding conductor. See "grounding conductor, equipment."

Explosion-proof apparatus. Apparatus enclosed in a case that is capable of withstanding an explosion of a specified gas or vapor which may occur within it and of preventing the ignition of a specified gas or vapor surrounding the enclosure by sparks, flashes, or explosion of the gas or vapor within, and which operates at such an external temperature that it will not ignite a surrounding flammable atmosphere.

Exposed. (As applied to live parts.) Capable of being inadvertently touched or approached nearer than a safe distance by a person. It is applied to parts not suitably guarded, isolated, or insulated. (See "accessible" and "concealed.")

Exposed. (As applied to wiring methods.) On or attached to the surface or behind panels designed to allow access. See "accessible. (As applied to wiring methods.)"

Exposed. (For the purposes of WAC 296-155-459(3), Communications systems.) Where the circuit is in such a position that in case of failure of supports or insulation, contact with another circuit may result.

Externally operable. Capable of being operated without exposing the operator to contact with live parts.

Feeder. All circuit conductors between the service equipment, or the generator switchboard of an isolated plant, and the final branch-circuit overcurrent device.

Festoon lighting. A string of outdoor lights suspended between two points more than 15 feet (4.57 m) apart.

Fitting. An accessory such as a locknut, bushing, or other part of a wiring system that is intended primarily to perform a mechanical rather than an electrical function.

Fuse. (Over 600 volts, nominal.) An overcurrent protective device with a circuit opening fusible part that is heated and severed by the passage of overcurrent through it. A fuse comprises all the parts that form a unit capable of performing the prescribed functions. It may or may not be the complete device necessary to connect it into an electrical circuit.

Ground. A conducting connection, whether intentional or accidental, between an electrical circuit or equipment and the earth, or to some conducting body that serves in place of the earth.

Grounded. Connected to earth or to some conducting body that serves in place of the earth.

Grounded, effectively. (Over 600 volts, nominal.) Permanently connected to earth through a ground connection of sufficiently low impedance and having sufficient ampacity that ground fault current which may occur cannot build up to voltages dangerous to personnel.

Grounded conductor. A system or circuit conductor that is intentionally grounded.

Grounding conductor. A conductor used to connect equipment or the grounded circuit of a wiring system to a grounding electrode or electrodes.

Grounding conductor, equipment. The conductor used to connect the noncurrent-carrying metal parts of equipment, raceways, and other enclosures to the system grounded conductor and/or the grounding electrode conductor at the service equipment or at the source of a separately derived system.

Grounding electrode conductor. The conductor used to connect the grounding electrode to the equipment grounding conductor and/or to the grounded conductor of the circuit at the service equipment or at the source of a separately derived system.

Ground-fault circuit interrupter. A device for the protection of personnel that functions to deenergize a circuit or portion thereof within an established period of time when a current to ground exceeds some predetermined value that is less than that required to operate the overcurrent protective device of the supply circuit.

Guarded. Covered, shielded, fenced, enclosed, or otherwise protected by means of suitable covers, casings, barriers, rails, screens, mats, or platforms to remove the likelihood of approach to a point of danger or contact by persons or objects.

Hazard. That condition, potential or inherent, which is likely to cause injury, death, or occupational disease.

Hoistway. Any shaftway, hatchway, well hole, or other vertical opening or space in which an elevator or dumbwaiter is designed to operate.

Identified (conductors or terminals). Identified, as used in reference to a conductor or its terminal, means that such conductor or terminal can be recognized as grounded.

Identified (for the use). Recognized as suitable for the specific purpose, function, use, environment, application, etc., where described as a requirement in this standard. Suitability of equipment for a specific purpose, environment, or application is determined by a qualified testing laboratory where such identification includes labeling or listing.

Insulated conductor. See conductor."

Interrupter switch. (Over 600 volts, nominal.) A switch capable of making, carrying, and interrupting specified currents.

Intrinsically safe equipment and associated wiring. Equipment and associated wiring in which any spark or thermal effect, produced either normally or in specified fault conditions, is incapable, under certain prescribed test conditions, of causing ignition of a mixture of flammable or combustible material in air in its most easily ignitible concentration.

Isolated. Not readily accessible to persons unless special means for access are used.

Isolated power system. A system comprising an isolating transformer or its equivalent, a line isolation monitor, and its ungrounded circuit conductors.

J-Box (junction box). An electrical sheet metal enclosure with openings for conduit or cable with sheet metal cover. The primary purpose is for joining conductors for splicing.

Labeled. Equipment or materials to which has been attached a label, symbol or other identifying mark of a qualified testing laboratory which indicates compliance with appropriate standards or performance in a specified manner.

Lighting outlet. An outlet intended for the direct connection of a lampholder, a lighting fixture, or a pendant cord terminating in a lampholder.

Listed. Equipment or materials included in a list published by a qualified testing laboratory whose listing states either that the equipment or material meets appropriate standards or has been tested and found suitable for use in a specified manner.

Location.

- **Damp location.** Partially protected locations under canopies, marquees, roofed open porches, and like locations, and interior locations subject to moderate degrees of moisture, such as some basements.
- **Dry location.** A location not normally subject to dampness or wetness. A location classified as dry may be temporarily subject to dampness or wetness, as in the case of a building under construction.
- **Wet location.** Installations underground or in concrete slabs or masonry in direct contact with the earth, and locations subject to saturation with water or other liquids, such as locations exposed to weather and unprotected.

Mobile x-ray. X-ray equipment mounted on a permanent base with wheels and/or casters for moving while completely assembled.

Motor control center. An assembly of one or more enclosed sections having a common power bus and principally containing motor control units.

Outlet. A point on the wiring system at which current is taken to supply utilization equipment.

Overcurrent. Any current in excess of the rated current of equipment or the ampacity of a conductor. It may result from overload (see definition), short circuit, or ground fault. A current in excess of rating may be accommodated by certain equipment and conductors for a given set of conditions. Hence the rules for overcurrent protection are specific for particular situations.

Overload. Operation of equipment in excess of normal, full load rating, or of a conductor in excess of rated ampacity which, when it persists for a sufficient length of time, would cause damage or dangerous overheating. A fault, such as a short circuit or ground fault, is not an overload. (See "overcurrent.")

Panelboard. A single panel or group of panel units designed for assembly in the form of a single panel; including buses, automatic overcurrent devices, and with or without switches for the control of light, heat, or power circuits; designed to be placed in a cabinet or cutout box placed in or against a wall or partition and accessible only from the front. (See "switchboard.")

Portable x-ray. X-ray equipment designed to be hand-carried.

Power fuse. (Over 600 volts, nominal.) See "fuse."

Power outlet. An enclosed assembly which may include receptacles, circuit breakers, fuseholders, fused switches, buses and watt-hour meter mounting means; intended to serve as a means for distributing power required to operate mobile or temporarily installed equipment.

Premises wiring system. That interior and exterior wiring, including power, lighting, control, and signal circuit wiring together with all of its associated hardware, fittings, and wiring devices, both permanently and temporarily installed, which extends from the load end of the service drop, or load end of the service lateral conductors to the outlet(s). Such wiring does not include wiring internal to appliances, fixtures, motors, controllers, motor control centers, and similar equipment.

Qualified person. One familiar with the construction and operation of the equipment and the hazards involved.

Qualified testing laboratory. A properly equipped and staffed testing laboratory which has capabilities for and which provides the following services:

- Experimental testing for safety of specified items of equipment and materials referred to in this standard to determine compliance with appropriate test standards or performance in a specified manner;
- Inspecting the run of such items of equipment and materials at factories for product evaluation to assure compliance with the test standards;
- Service-value determinations through field inspections to monitor the proper use of labels on products and with authority for recall of the label in the event a hazardous product is installed;
- Employing a controlled procedure for identifying the listed and/or labeled equipment or materials tested; and
- Rendering creditable reports or findings that are objective and without bias of the tests and test methods employed.

Raceway. A channel designed expressly for holding wires, cables, or busbars, with additional functions as permitted in this part. Raceways may be of metal or insulating material, and the term includes rigid metal conduit, rigid nonmetallic conduit, intermediate metal conduit, liquidtight flexible metal conduit, flexible metallic tubing, flexible metal conduit, electrical metallic tubing, underfloor raceways, cellular concrete floor raceways, cellular metal floor raceways, surface raceways, wireways, and busways.

Readily accessible. Capable of being reached quickly for operation, renewal, or inspections, without requiring those to whom ready access is requisite to climb over or remove obstacles or to resort to portable ladders, chairs, etc. (See "accessible.")

Receptacle. A receptacle is a contact device installed at the outlet for the connection of a single attachment plug. A single receptacle is a single contact device with no other contact device on the same yoke. A multiple receptacle is a single device containing two or more receptacles.

Receptacle outlet. An outlet where one or more receptacles are installed.

Remote-control circuit. Any electric circuit that controls any other circuit through a relay or an equivalent device.

Sealable equipment. Equipment enclosed in a case or cabinet that is provided with a means of sealing or locking so that live parts cannot be made accessible without opening the enclosure. The equipment may or may not be operable without opening the enclosure.

Separately derived system. A premises wiring system whose power is derived from generator, transformer, or converter windings and has no direct electrical connection, including a solidly connected grounded circuit conductor, to supply conductors originating in another system.

Service. The conductors and equipment for delivering energy from the electricity supply system to the wiring system of the premises served.

Service conductors. The supply conductors that extend from the street main or from transformers to the service equipment of the premises supplied.

Service drop. The overhead service conductors from the last pole or other aerial support to and including the splices, if any, connecting to the service-entrance conductors at the building or other structure.

Service-entrance conductors, overhead system. The service conductors between the terminals of the service equipment and a point usually outside the building, clear of building walls, where joined by tap or splice to the service drop.

Service-entrance conductors, underground system. The service conductors between the terminals of the service equipment and the point of connection to the service lateral. Where service equipment is located outside the building walls, there may be no service-entrance conductors, or they may be entirely outside the building.

Service equipment. The necessary equipment, usually consisting of a circuit breaker or switch and fuses, and their accessories, located near the point of entrance of supply conductors to a building or other structure, or an otherwise defined area, and intended to constitute the main control and means of cutoff of the supply.

Service raceway. The raceway that encloses the service-entrance conductors.

Shock hazard. To exist at an accessible part in a circuit between the part and ground, or other accessible parts if the potential is more than 42.4 volts peak and the current through a 1,500-ohm load is more than 5 milliamperes.

Signaling circuit. Any electric circuit that energizes signaling equipment.

Switchboard. A large single panel, frame, or assembly of panels which have switches, buses, instruments, overcurrent and other protective devices mounted on the face or back or both. Switchboards are generally accessible from the rear as well as from the front and are not intended to be installed in cabinets. (See "panelboard.")

Switches.

- **General-use switch.** A switch intended for use in general distribution and branch circuits. It is rated in amperes, and it is capable of interrupting its rated current at its rated voltage.
- **General-use snap switch.** A form of general-use switch so constructed that it can be installed in flush device boxes or on outlet box covers, or otherwise used in conjunction with wiring systems recognized by this part.
- **Isolating switch.** A switch intended for isolating an electric circuit from the source of power. It has no interrupting rating, and it is intended to be operated only after the circuit has been opened by some other means.
- **Motor-circuit switch.** A switch, rated in horsepower, capable of interrupting the maximum operating overload current of a motor of the same horsepower rating as the switch at the rated voltage.

Switching devices. (Over 600 volts, nominal.) Devices designed to close and/or open one or more electric circuits. Included in this category are circuit breakers, cutouts, disconnecting (or isolating) switches, disconnecting means, and interrupter switches.

Transformer. A transformer is an apparatus for converting electrical power in an a-c system at one voltage or current into electrical power at some other voltage or current without the use of rotating parts.

Transportable x-ray. X-ray equipment installed in a vehicle or that may readily be disassembled for transport in a vehicle.

Utilization equipment. Utilization equipment means equipment which utilizes electric energy for mechanical, chemical, heating, lighting, or similar useful purpose.

Utilization system. A utilization system is a system which provides electric power and light for employee workplaces, and includes the premises wiring system and utilization equipment.

Ventilated. Provided with a means to permit circulation of air sufficient to remove an excess of heat, fumes, or vapors.

Volatile flammable liquid. A flammable liquid having a flash point below 38°C (100°F) or whose temperature is above its flash point, or a Class II combustible liquid having a vapor pressure not exceeding 40 psia (276 kPa) at 38°C (100°F) whose temperature is above its flash point.

Voltage. (Of a circuit.) The greatest root-mean-square (effective) difference of potential between any two conductors of the circuit concerned.

Voltage, nominal. A nominal value assigned to a circuit or system for the purpose of conveniently designating its voltage class (as 120/240, 480Y/277, 600, etc.). The actual voltage at which a circuit operates can vary from the nominal within a range that permits satisfactory operation of equipment.

Voltage to ground. For grounded circuits, the voltage between the given conductor and that point or conductor of the circuit that is grounded; for ungrounded circuits, the greatest voltage between the given conductor and any other conductor of the circuit.

Watertight. So constructed that moisture will not enter the enclosure.

Weatherproof. So constructed or protected that exposure to the weather will not interfere with successful operation. Rainproof, raintight, or watertight equipment can fulfill the requirements for weatherproof where varying weather conditions other than wetness, such as snow, ice, dust, or temperature extremes, are not a factor.

Wet location. See “location.”

[Statutory Authority: RCW 49.17.010, .040, .050, and .060. 16-09-085 (Order 15-08), § 296-155-462, filed 04/19/16, effective, 05/20/16. Statutory Authority: Chapter 49.17 RCW. 94-15-096 (Order 94-07), § 296-155-462, filed 7/20/94, effective 9/20/94; 93-19-142 (Order 93-04), § 296-155-462, filed 9/22/93, effective 11/1/93; 88-11-021 (Order 88-04), § 296-155-462, filed 5/11/88.]

PART J
STAIRWAYS

LAST UPDATED: 05/20/2016

WAC 296-155-475 Scope and application. 1

WAC 296-155-47501 Definitions applicable to this part..... 1

WAC 296-155-476 General requirements. 2

WAC 296-155-477 Stairways..... 3

WAC 296-155-475 Scope and application.

This part applies to all stairways used in construction, alteration, repair (including painting and decorating), and demolition workplaces covered under chapter 296-155 WAC, and also sets forth, in specified circumstances, when stairways are required to be provided.

Reference:

- *Requirements for ladders used on or with scaffolds are located in chapter 296-874 WAC, Scaffolds.*
- *Requirements for portable ladders are located in chapter 296-876 WAC.*

[Statutory Authority: RCW 49.17.010, .040, .050, and .060. 05-20-068 (Order 05-10), § 296-155-475, filed 10/04/05, effective 01/01/06. Statutory Authority: Chapter 49.17 RCW. 91-24-017 (Order 91-07), § 296-155-475, filed 11/22/91, effective 12/24/91. Statutory Authority: RCW 49.17.040 and 49.17.050. 86-03-074 (Order 86-14), § 296-155-475, filed 1/21/86; Order 76-6, § 296-155-475, filed 3/1/76; Order 74-26, § 296-155-475, filed 5/7/74, effective 6/6/74.]

WAC 296-155-47501 Definitions applicable to this part.

Equivalent. Alternative designs, materials, or methods that the employer can demonstrate will provide an equal or greater degree of safety for employees than the method or item specified in the standard.

Failure. Load refusal, breakage, or separation of component parts. Load refusal is the point where the structural members lose their ability to carry the loads.

Handrail. A rail used to provide employees with a handhold for support.

Lower levels. Those areas to which an employee can fall from a stairway or ladder. Such areas include ground levels, floors, roofs, ramps, runways, excavations, pits, tanks, material, water, equipment, and similar surfaces. It does not include the surface from which the employee falls.

Nosing. That portion of a tread projecting beyond the face of the riser immediately below.

Platform. A walking/working surface for persons, elevated above the surrounding floor or ground.

Point of access. All areas used by employees for work-related passage from one area or level to another. Such open areas include doorways, passageways, stairway openings, studded walls, and various other permanent or temporary openings used for such travel.

Riser height. The vertical distance from the top of a tread to the top of the next higher tread or platform/landing or the distance from the top of a platform/landing to the top of the next higher tread or platform/landing.

Spiral stairway. A series of steps attached to a vertical pole and progressing upward in a winding fashion within a cylindrical space.

Stair rail system. A vertical barrier erected along the unprotected sides and edges of a stairway to prevent employees from falling to lower levels. The top surface of a stair rail system may also be a “handrail.”

Tread depth. The horizontal distance from front to back of a tread (excluding nosing, if any).

Unprotected sides and edges. Any side or edge (except at entrances to points of access) of a stairway where there is no stair rail system or wall 36 inches (.9 m) or more in height, and any side or edge (except at entrances to points of access) of a stairway landing, or ladder platform where there is no wall or guardrail system 39 inches (1 m) or more in height.

[Statutory Authority: RCW 49.17.010, .040, .050, and .060. 16-09-085 (Order 15-08), § 296-155-47501, filed 04/19/16, effective, 05/20/16. Statutory Authority: RCW 49.17.010, .040, .050, and .060. 06-16-020 (Order 06-10), § 296-155-47501, filed 07/24/06, effective 12/01/06. Statutory Authority: RCW 49.17.010, .040, .050, and .060. 05-20-068 (Order 05-10), § 296-155-47501, filed 10/04/05, effective 01/01/06. Statutory Authority: Chapter 49.17 RCW. 91-24-017 (Order 91-07), § 296-155-47501, filed 11/22/91, effective 12/24/91.]

WAC 296-155-476 General requirements.

(1) You must provide a stairway or ladder at all personnel points of access where there is a break in elevation of 19 inches (48 cm) or more, and no ramp, runway, sloped embankment, or personnel hoist is provided.

(a) Employees must not use any spiral stairways that will not be a permanent part of the structure on which construction work is being performed.

(b) You must provide a double-cleated ladder or two or more separate ladders when ladders are the only means of access or exit from a working area for 25 or more employees, or when a ladder is to serve simultaneous two-way traffic.

(c) When a building or structure has only one point of access between levels, you must keep that point of access clear to permit free passage of employees. When work must be performed or equipment must be used such that free passage at that point of access is restricted, you must provide and use a second point of access.

(d) When a building or structure has two or more points of access between levels, you must keep at least one point of access clear to permit free passage of employees.

(2) You must provide and install all stairway and ladder fall protection systems required by this part and you must comply with all other pertinent requirements of this part before employees begin the work that necessitates the installation and use of stairways, ladders, and their respective fall protection systems.

[Statutory Authority: RCW 49.17.010, .040, .050, and .060. 16-09-085 (Order 15-08), § 296-155-476, filed 04/19/16, effective, 05/20/16. Statutory Authority: RCW 49.17.010, .040, .050, and .060. 06-05-027 (Order 05-45), § 296-155-476, filed 02/07/06, effective 04/01/06. Statutory Authority: Chapter 49.17 RCW. 91-24-017 (Order 91-07), § 296-155-476, filed 11/22/91, effective 12/24/91.]

WAC 296-155-477 Stairways.

(1) **General**. The following requirements apply to all stairways as indicated:

(a) Stairways that will not be a permanent part of the structure on which construction work is being performed must have landings of not less than 30 inches (76 cm) in the direction of travel and extend at least 22 inches (56 cm) in width at every 12 feet (3.7 m) or less of vertical rise.

(b) You must install stairs between 30 degrees and 50 degrees from horizontal.

(c) In all buildings or structures two or more stories or 24 feet or more in height or depth, you must install suitable permanent or temporary stairways.

(d) You must provide stairways, ramps or ladders at all points where a break in elevation of 18 inches or more occurs in a frequently traveled passageway, entry or exit.

(e) You must provide a minimum of one stairway for access and exit for buildings and structures to 3 stories or 36 feet; if more than 3 stories or 36 feet, you must provide two or more stairways. Where two stairways are provided and work is being performed in the stairways, you must maintain one clear for access between levels at all times.

(f) Wood frame buildings.

(i) You must complete the stairway to a second or higher floor before studs are raised to support the next higher floor.

(ii) You must provide roof and attic work areas of all buildings with a safe means of access and egress, such as stairways, ramps or ladders.

(iii) You must nail cleats to studs to provide access to and egress from roof or other work areas.

(g) Steel frame buildings. Stairways must extend to the uppermost floor that has been planked or decked. Ladders may be used above that point.

(h) Reinforced concrete or composite steel-Concrete buildings. Stairways must extend to the lowermost floor upon which a complete vertical shoring system is in place. A minimum of two ladders at different locations for each floor may be used above this floor but not to exceed 3 floors.

(i) Riser height and tread depth must be uniform within each flight of stairs, including any foundation structure used as one or more treads of the stairs. Variations in riser height or tread depth must not be over 1/4-inch (0.6 cm) in any stairway system.

(j) Where doors or gates open directly on a stairway, you must provide a platform, and the swing of the door must not reduce the effective width of the platform to less than 20 inches (51 cm).

(k) You must secure metal pan landings and metal pan treads, when used, in place before filling with concrete or other material.

(l) All parts of stairways must be free of hazardous projections, such as protruding nails.

(m) You must eliminate slippery conditions on stairways before the stairways are used to reach other levels.

(n) You are permitted to use alternating tread type stairs as long as they install, use, and maintain the stairs in accordance with manufacturer's recommendations and the following:

(i) The stair must be installed at an angle of 70 degrees or less.

(ii) The stair must be capable of withstanding a minimum uniform load of 100 pounds per square foot with a design factor of 1.7, and the treads must be capable of carrying a minimum concentrated load of 300 pounds at the center of any treadspan or exterior arc with a design factor of 1.7. If the stair is intended for greater loading, construction must allow for that loading.

(iii) The stair must be equipped with a handrail on each side to assist the user in climbing or descending.

(o) Due to space limitations, when a permanent stairway must be installed at an angle above 50 degrees, such an installation (commonly called an inclined or ship's ladder) must have treads, open risers and handrails on both sides.

(p) Where ladders are permitted for access under subsection (1) of this section, you must provide means for employee hoisting of tools and material, such as a well wheel and hoisting line or the equivalent, so employees will have both hands free for ascending and descending ladders.

(2) **Temporary service**. The following requirements apply to all stairways as indicated:

(a) Except during stairway construction, foot traffic is prohibited on stairways with pan stairs where the treads and/or landings are to be filled in with concrete or other material at a later date, unless the stairs are temporarily fitted with wood or other solid material at least to the top edge of each pan. You must replace such temporary treads and landings when worn below the level of the top edge of the pan.

(b) Except during stairway construction, foot traffic is prohibited on skeleton metal stairs where permanent treads and/or landings are to be installed at a later date, unless the stairs are fitted with secured temporary treads and landings long enough to cover the entire tread and/or landing area.

(c) Treads for temporary service must be made of wood or other solid material, and must be installed the full width and depth of the stair.

(3) **Stair rails and handrails**. The following requirements apply to all stairways as indicated:

(a) Stairways having 4 or more risers or rising more than 30 inches (76 cm), whichever is less, must be equipped with:

(i) At least one handrail; and

(ii) One stair rail system along each unprotected side or edge.

Note: When the top edge of a stair rail system also serves as a handrail, subdivision (g) of this subsection applies.

(b) Winding and spiral stairways must be equipped with a handrail offset sufficiently to prevent walking on those portions of the stairways where the tread width is less than 6 inches (15 cm).

(c) The height of stair rails must be as follows:

(i) Stair rails installed after the effective date of this standard, must be not less than 36 inches (91.5 cm) from the upper surface of the stair rail system to the surface of the tread, in line with the face of the riser at the forward edge of the tread.

(ii) Stair rails installed before the effective date of this standard, must be not less than 30 inches (76 cm) nor more than 34 inches (86 cm) from the upper surface of the stair rail system to the surface of the tread, in line with the face of the riser at the forward edge of the tread.

(d) You must provide midrails, screens, mesh, intermediate vertical members, or equivalent intermediate structural members, between the top rail of the stair rail system and the stairway steps.

(i) You must locate midrails, when used, at a height midway between the top edge of the stair rail system and the stairway steps.

(ii) Screens or mesh, when used, must extend from the top rail to the stairway step, and along the entire opening between top rail supports.

(iii) When intermediate vertical members, such as balusters, are used between posts, they must be not more than 19 inches (48 cm) apart.

(iv) You must install other structural members, when used, such that there are no openings in the stair rail system that are more than 19 inches (48 cm) wide.

(e) Handrails and the top rails of stair rail systems must be capable of withstanding, without failure, a force of at least 200 pounds (890 n) applied within two inches (5 cm) of the top edge, in any downward or outward direction, at any point along the top edge.

(f) The height of handrails must be not more than 37 inches (94 cm) nor less than 30 inches (76 cm) from the upper surface of the handrail to the surface of the tread, in line with the face of the riser at the forward edge of the tread.

(g) When the top edge of a stair rail system also serves as a handrail, the height of the top edge must be not more than 37 inches (94 cm) nor less than 36 inches (91.5 cm) from the upper surface of the stair rail system to the surface of the tread, in line with the face of the riser at the forward edge of the tread.

(h) Stair rail systems and handrails must be so surfaced as to prevent injury to employees from punctures or lacerations, and to prevent snagging of clothing.

(i) Handrails must provide an adequate handhold for employees grasping them to avoid falling.

(j) The ends of stair rail systems and handrails must be constructed so as not to constitute a projection hazard.

(k) Handrails that will not be a permanent part of the structure being built must have a minimum clearance of 3 inches (8 cm) between the handrail and walls, stair rail systems, and other objects.

(l) You must provide unprotected sides and edges of stairway landings with guardrail systems. Guardrail system criteria are contained in chapter 296-155 WAC, Part C-1, Fall protection requirements for construction.

[Statutory Authority: RCW 49.17.010, .040, .050, and .060. 16-09-085 (Order 15-08), § 296-155-477, filed 04/19/16, effective, 05/20/16. Statutory Authority: RCW 49.17.010, .040, .050, and .060. 13-04-073 (Order 06-08), § 296-155-477, filed 02/04/13, effective 04/01/13. Statutory Authority: Chapter 49.17 RCW. 96-24-051, (Order 96-05), § 296-155-477, filed 11/27/96, effective 02/01/97. 95-10-016, § 296-155-477, filed 4/25/95, effective 10/1/95; 91-24-017 (Order 91-07), § 296-155-477, filed 11/22/91, effective 12/24/91.]

PART L
CRANES, RIGGING AND PERSONNEL LIFTING

LAST UPDATED: 05/20/2016

WAC 296-155-529 Scope and definitions. 1

WAC 296-155-52900 Scope. 1

WAC 296-155-52901 Certification and proof load testing--Requirement..... 3

WAC 296-155-52902 Definitions. 4

WAC 296-155-531 Crane certifier accreditation process..... 15

WAC 296-155-53100 Accreditation of crane certifiers and derricks--Requirements. ... 15

WAC 296-155-53102 Accreditation--Application form and applicant qualifications. 16

WAC 296-155-53104 Issuance of accreditation. 17

WAC 296-155-53106 Accreditation application--Processing time. 17

WAC 296-155-53108 Duration and renewal of an accreditation. 18

WAC 296-155-53110 Revocation or suspension of an accreditation. 18

WAC 296-155-53112 Monitoring of accredited crane certifiers. 19

WAC 296-155-53114 Issuance of temporary and annual certificates of operation..... 20

WAC 296-155-532 Crane certification requirements for cranes. 21

WAC 296-155-53200 General inspection criteria, wire rope inspection and removal criteria, and preproof load test requirements for all cranes. 21

WAC 296-155-53202 Additional inspection criteria and proof load testing--Mobile cranes. 24

WAC 296-155-53204 Additional inspection criteria and proof load testing--Articulating boom cranes. 28

WAC 296-155-53206 Additional inspection criteria and proof load testing--Tower cranes. 30

WAC 296-155-53208 Additional inspection criteria and proof load testing--Self-erecting tower cranes. 34

WAC 296-155-53210 Additional inspection criteria and proof load testing--Overhead/bridge and gantry bridge cranes. 38
WAC 296-155-53212 Additional inspection criteria and proof load testing--Derricks. .. 41
WAC 296-155-53214 Crane decertification and reinstatement. 42

WAC 296-155-533 Qualifications and certification..... 43

WAC 296-155-53300 Operator qualifications and certification. 43
WAC 296-155-53302 Signal person qualifications. 48
WAC 296-155-53304 Repair, Inspection and Maintenance Employee Qualifications. . 49
WAC 296-155-53306 Rigger Qualifications..... 50

WAC 296-155-534 General Requirements for All Cranes and Derricks. 51

WAC 296-155-53400 General Requirements. 51
WAC 296-155-53401 Duties of assigned personnel..... 66
WAC 296-155-53402 Assembly/Disassembly. 72
WAC 296-155-53403 Fall Protection. 80
WAC 296-155-53404 Wire Rope. 83
WAC 296-155-53405 Inspections. 89
WAC 296-155-53406 Signals. 92
WAC 296-155-53408 Power line safety 94
WAC 296-155-53409 Training. 106
WAC 296-155-53410 Safety Devices. 107
WAC 296-155-53412 Operational Aids. 108
WAC 296-155-53414 Cranes/derricks with a rated hoisting/lifting capacity of 2,000 pounds or less. 112

WAC 296-155-537 Mobile cranes. 114

WAC 296-155-53700 Mobile cranes - general. 114
WAC 296-155-53715 Mobile cranes--Operations. 115

WAC 296-155-538 Articulating boom cranes. 116

WAC 296-155-53800 Articulating boom cranes--General. 116

WAC 296-155-53815 Articulating boom cranes--Operations. 116

WAC 296-155-539 Tower cranes. 117

WAC 296-155-53900 Tower cranes--General. 117

WAC 296-155-53905 Tower cranes--Additional inspection criteria. 126

WAC 296-155-53915 Tower cranes--Operations. 127

WAC 296-155-541 Self-erecting tower cranes. 128

WAC 296-155-54100 Self-erecting tower cranes--General. 128

WAC 296-155-54115 Self-erecting tower cranes--Operations. 136

WAC 296-155-542 Overhead/bridge and gantry cranes..... 138

WAC 296-155-54200 Overhead/bridge and gantry cranes--General. 138

WAC 296-155-54215 Overhead/bridge and gantry cranes--Operations..... 139

WAC 296-155-543 Derricks. 140

WAC 296-155-54300 Derricks--General. 140

WAC 296-155-54305 Derricks--Construction. 143

WAC 296-155-54320 Derricks--Operations..... 146

WAC 296-155-544 Additional requirements for other types of cranes/derricks. 147

WAC 296-155-54400 Floating cranes/derricks and land cranes/derricks on barges. . 147

WAC 296-155-54405 Dedicated pile drivers. 154

WAC 296-155-54410 Sideboom cranes. 155

WAC 296-155-547 Personnel lifting platforms (attached and suspended) Scope. 155

WAC 296-155-548 Design and installation requirements for personnel lifting systems. 156

WAC 296-155-54800 Design of platforms and suspension systems. 156

WAC 296-155-549 Personnel lifting hoisting equipment. ... 159

WAC 296-155-54900 Crane or derrick requirements for personnel lifting. 159

WAC 296-155-551 Inspections, maintenance and testing. . 161

WAC 296-155-55100 Inspections on cranes and personnel platforms. 161

WAC 296-155-55105 Adjustments and repairs on personnel platforms. 162

WAC 296-155-55110 Proof load test platforms and rigging. 163

WAC 296-155-55115 Trial lift. 164

WAC 296-155-552 Employer responsibilities. 165

WAC 296-155-55200 Employer responsibilities for lifting personnel. 165

WAC 296-155-55205 Responsibilities of the personnel lift supervisor. 167

WAC 296-155-55210 Crane or derrick operation requirements for personnel lifting. . 168

WAC 296-155-553 Lifting personnel. 170

WAC 296-155-55300 Personnel lifting requirements. 170

WAC 296-155-55305 Lifting personnel near electrical power lines. 174

WAC 296-155-554 Boatswain's chairs. 178

WAC 296-155-55400 Use boatswain's chairs as a last resort. 178

WAC 296-155-55405 Lifting personnel using a boatswain's chair. 178

WAC 296-155-556 Rigging--General requirements. 179

WAC 296-155-55600 General requirements. 179

WAC 296-155-558 Slings. 182

WAC 296-155-55800 Chain Slings..... 182
WAC 296-155-55805 Wire rope slings. 188
WAC 296-155-55810 Metal mesh slings. 199
WAC 296-155-55815 Synthetic rope slings..... 202
WAC 296-155-55820 Synthetic webbing slings. 207
WAC 296-155-55825 Synthetic roundslings..... 211

WAC 296-155-561 Rigging hardware. 215

WAC 296-155-56100 General requirements. 215
WAC 296-155-56105 Shackles. 217
WAC 296-155-56110 Adjustable hardware. 219
WAC 296-155-56115 Compression hardware..... 224
WAC 296-155-56120 Links, rings, and swivels. 226
WAC 296-155-56125 Rigging blocks. 227

WAC 296-155-562 Lifting devices other than slings and rigging hardware. 228

WAC 296-155-56200 Structural and mechanical lifters..... 228
WAC 296-155-56205 Vacuum lifters. 233
WAC 296-155-56210 Close proximity lifting magnets. 239
WAC 296-155-56215 Remotely operated lifting magnets. 244
WAC 296-155-56220 Scrap and material handling grapples. 247

WAC 296-155-564 Appendices. 251

WAC 296-155-56400 Mobile Crane Hand Signal Chart. 251

WAC 296-155-56405 Examples of types of cranes..... 254
WAC 296-155-56410 Personnel Platform Lift Planning and Authorization Form. 267
WAC 296-155-56415 Qualifications for operators of below the hook lifting devices. . 268

WAC 296-155-56420 Operator Certification: Written Examination: Technical Knowledge. 268

WAC 296-155-56425 Sample declaration form for hours of experience. 273

WAC 296-155-56430 Assembly/disassembly Working under the boom, jib or other components: Sample procedures for minimizing the risk of unintended dangerous boom movement. 275

WAC 296-155-56435 Work area chart. 277

WAC 296-155-529 Scope and definitions.

[Statutory Authority: RCW 49.17.010, .004, .050, and .060. 13-02-068 (Order 12-14), § 296-155-529, filed 12/31/12, effective 02/01/13. Statutory Authority: RCW 49.17.010, .040, .050, and .060. 08-22-080 (Order 07-28), § 296-155-529, filed 11/04/08, effective 01/01/10.]

WAC 296-155-52900 Scope.

(1) Except as provided in subsection (3) of this section, this part applies to the following:

(a) Power-operated cranes and derricks used in construction that can hoist, lower and horizontally move a suspended load (with or without attachments). Such equipment includes, but is not limited to: Articulating boom cranes (such as knuckle-boom cranes); crawler cranes; floating cranes; cranes on barges; locomotive cranes; mobile cranes (such as wheel-mounted, rough-terrain, all-terrain, commercial truck-mounted, and boom truck cranes); multi-purpose machines when configured to hoist and lower (by means of a winch or hook) and horizontally move a suspended load; industrial cranes (such as carry-deck cranes); cranes being used as dedicated pile drivers; service/mechanic trucks with a hoisting device; a crane on a monorail; tower cranes (such as fixed jib ("hammerhead boom"), luffing boom and self-erecting); pedestal cranes; portal cranes; overhead/bridge and gantry cranes; straddle cranes; side-boom tractors; derricks; and variations of such equipment; and

(b) Personnel lifting with attached or suspended platforms using cranes or derricks (WAC 296-155-547).

(2) **Attachments**. This standard applies to equipment included in subsection (1) of this section when used with attachments. Such attachments, whether crane-attached or suspended include, but are not limited to:

- Hooks;
- Magnets;
- Grapples;
- Clamshell buckets;
- Orange peel buckets;
- Concrete buckets;
- Draglines;
- Personnel platforms;
- Augers or drills; and
- Pile driving equipment.

(3) The equipment listed below are exempted from WAC 296-155-531 and 296-155-532 (Crane certifier accreditation and crane certification) through 296-155-53300 (operator qualifications and certification):

(a) Cranes having a maximum rated capacity of one ton or less. See WAC 296-155-53414 for additional requirements.

(b) Powered industrial trucks (forklifts) when configured to hoist and lower (by means of a winch or hook) and horizontally move a suspended load are exempted from WAC 296-155-532 crane certification. Operators must also follow the requirements in chapter 296-863 WAC, Forklifts and other powered industrial trucks.

(c) Service cranes with booms that rotate manually.

(4) **The equipment listed below are exempt from this part:**

(a) Equipment included in subsection (1) of this section while it has been converted or adapted for nonhoisting/lifting use. Such conversions/adaptions include, but are not limited to, power shovels, excavators, and concrete pumps.

(b) Power shovels, excavators, wheel loaders, backhoes, loader backhoes, track loaders. This machinery is also excluded when used with chains, slings or other rigging to lift suspended loads.

(c) Automotive wreckers and tow trucks when used to clear wrecks and haul vehicles.

(d) Equipment originally designed as vehicle-mounted devices (for lifting personnel) and self-propelled elevating work platforms.

(e) Hydraulic jacking systems, including telescopic/hydraulic gantries.

(f) Stacker cranes.

(g) Mechanic's truck with a hoisting device when used in activities related to equipment maintenance and repair.

(h) Equipment that hoists by using a come-a-long or chainfall.

(i) Dedicated drilling rigs.

(j) Gin poles used for the erection of communication towers.

(k) Tree trimming and tree removal work.

(l) Anchor handling or dredge-related operations with a vessel or barge using an affixed A-frame.

(m) Roustabouts.

(n) Machines equipped with a boom that is limited to up and down movement only and does not rotate.

(o) Conveyors.

(p) Pump hoists with booms that do not rotate.

(q) Cranes and their operators used on-site in manufacturing facilities or powerhouses for occasional or routine maintenance and repair work.

(r) Helicopter cranes.

(s) Permanently installed overhead/bridge, gantry cranes, semi-gantry, cantilever cranes, wall cranes, storage bridge cranes, and others having the same fundamental characteristics.

(t) Digger derricks when used for activities that are covered under chapter 296-45 WAC, Safety standards for electrical workers, or chapter 296-32 WAC, Safety standards for telecommunications. Cranes other than digger derricks when used for activities that are covered under chapter 296-45 WAC, Safety standards for electrical workers, or chapter 296-32 WAC, Safety standards for telecommunications are **NOT** exempt.

(u) Powered industrial trucks (forklifts) except when configured to hoist and lower (by means of a winch or hook) and horizontally move a suspended load.

> *Note: Rigging requirements for material handling is located in Part F-1 of this chapter.*

(5) Digger derricks that do not meet the exemption criteria is subsection (4) of this section must comply with WAC 296-155-531 (crane certifier accreditation and crane certification) through WAC 296-155-53300 (Operator qualifications and certification) 180 days after the effective date of this section.

(6) Where provisions of this standard direct an operator, crewmember, or other employee to take certain actions, you must establish, effectively communicate to the relevant persons, and enforce work rules, to ensure compliance with such provisions.

(7) Work covered by chapter 296-45 WAC, Safety Standards for Electrical Workers is deemed in compliance with WAC 296-155-53408.

(8) WAC 296-155-53400(35) through (39) does not apply to cranes designed for use on railroad tracks, when used on railroad tracks that are used as part of the general railroad system of transportation that is regulated pursuant to the Federal Railroad Administration under C.F.R. 49, Part 213, and that comply with applicable Federal Railroad Administration requirements. See WAC 296-155-53400(39).

[Statutory Authority: RCW 49.17.010, .040, .050, and .060. 16-09-085 (Order 15-08), § 296-155-52900, filed 04/19/16, effective, 05/20/16. Statutory Authority: RCW 49.17.010, .004, .050, and .060. 13-02-068 (Order 12-14), § 296-155-52900, filed 12/31/12, effective 02/01/13. Statutory Authority: RCWs 47.17.010, 49.17.040, 49.17.050, 49.17.440 and 49.17.060. 12-01-086 (Order 08-32), § 296-155-52900, filed 12/20/11, effective 02/01/12. Statutory Authority: RCW 49.17.010, .040, .050, and .060. 10-14-100 (Order 10-11), § 296-155-52900, filed 07/06/10, effective 09/01/10. Statutory Authority: RCW 49.17.010, .040, .050, and .060. 08-22-080 (Order 07-28), § 296-155-52900, filed 11/04/08, effective 01/01/10.]

WAC 296-155-52901 Certification and proof load testing--Requirement.

Effective January 1, 2010, all cranes and derricks covered in WAC 296-155-52900 and not exempt in subsection (3) of that section, must be certified and proof load tested annually by an accredited crane certifier recognized by the department.

> *Note: For additional inspection criteria and proof load testing requirements for specific types of cranes, see:*

- WAC 296-155-53202 for mobile cranes.
- WAC 296-155-53204 for articulating boom cranes.
- WAC 296-155-53206 for tower cranes.
- WAC 296-155-53208 for self-erecting tower cranes.
- WAC 296-155-53210 for overhead and bridge cranes.
- WAC 296-155-53212 for derricks.

[Statutory Authority: RCW 49.17.010, .040, .050, and .060. 10-14-100 (Order 10-11), § 296-155-52901, filed 07/06/10, effective 09/01/10.]

WAC 296-155-52902 Definitions.

Accredited crane certifier. A crane inspector who has been accredited by the department.

A/D director (assembly/disassembly director). An individual who meets the requirements in this part for an A/D director, irrespective of the person's formal job title or whether the person is nonmanagement or management personnel.

Angle of loading. The acute angle between horizontal and the leg of the rigging, often referred to as horizontal angle. See figures 18 and 33.

Anti two-block device. A device that, when activated, disengages all crane functions whose movement can cause two-blocking.

Apprentice operator or **trainee**. **A** crane operator who has not met requirements established by the department under RCW 49.17.430.

Articulating boom crane. A crane whose boom consists of a series of folding, pin connected structural members, typically manipulated to extend or retract by power from hydraulic cylinders.

Assembly/disassembly. The assembly and/or disassembly of components or attachments covered under this part. With regard to tower cranes, "erecting and climbing" replaces the term "assembly," and "dismantling" replaces the term "disassembly." Regardless of whether the crane is initially erected to its full height or is climbed in stages, the process of increasing height of the crane is an erection process.

Assist crane. A crane used to assist in assembling or disassembling a crane.

Attachments. Any device that expands the range of tasks that can be done by the crane/derrick. Examples include, but are not limited to: an auger, drill, magnet, pile-driver, and boom-attached personnel platform.

Audible signal. A signal made by a distinct sound or series of sounds. Examples include, but are not limited to, sounds made by a bell, horn, or whistle.

Basket hitch. A method of rigging a sling in which the sling is passed around the load and both loop eyes or end fittings are attached to the lifting device.

Below-the-hook lifting device. A device used for attaching loads to a hoist. The device may contain components such as slings, hooks, rigging hardware, and lifting attachments.

Bird caging The twisting of fiber or wire rope in an isolated area of the rope in the opposite direction of the rope lay, thereby causing it to take on the appearance of a bird cage.

Blocking (also referred to as "cribbing"). Wood or other material used to support equipment or a component and distribute loads to the ground. It is typically used to support latticed boom sections during assembly/disassembly and under outrigger and stabilizer floats.

Boatswain's chair. A single-point adjustable suspension scaffold consisting of a seat or sling (which may be incorporated into a full body harness) designed to support one employee in a sitting position.

Bogie. See "travel bogie."

Boom (other than tower crane). An inclined spar, strut, or other long structural member which supports the upper hoisting tackle on a crane or derrick. Typically, the length and vertical angle of the boom can be varied to achieve increased height or height and reach when lifting loads. Booms can usually be grouped into general categories of hydraulically extendible, cantilevered type, latticed section, cable supported type or articulating type.

Boom (tower cranes). On tower cranes: If the "boom" (i.e., principal horizontal structure) is fixed, it is referred to as a jib; if it is moveable up and down, it is referred to as a boom.

Boom angle indicator. A device which measures the angle of the boom relative to horizontal.

Boom hoist limiting device Includes boom hoist disengaging device, boom hoist shut-off, boom hoist disconnect, boom hoist hydraulic relief, boom hoist kick-outs, automatic boom stop device, or derricking limiter. This type of device disengages boom hoist power when the boom reaches a predetermined operating angle. It also sets brakes or closes valves to prevent the boom from lowering after power is disengaged.

Boom length indicator. Indicates the length of the permanent part of the boom (such as ruled markings on the boom) or, as in some computerized systems, the length of the boom with extensions/attachments.

Boom stop. Includes boom stops (belly straps with struts/standoff), telescoping boom stops, attachment boom stops, and backstops. These devices restrict the boom from moving above a certain maximum angle and toppling over backward.

Boom suspension systems. A system of pendants, running ropes, sheaves, and other hardware which supports the boom tip and controls the boom angle.

Braided wire rope. A wire rope formed by plaiting component wire ropes.

Bridle wire rope sling. A sling composed of multiple legs with the top ends gathered in a fitting that goes over the lifting hook.

Builder. The builder/constructor of derricks.

Cable laid endless sling-mechanical joint. A wire rope sling made endless from one continuous length of cable laid rope with the ends joined by one or more metallic fittings.

Cable laid grommet-hand tucked. An endless wire rope sling made from one continuous length of rope formed to make a body composed of six ropes around a rope core. The rope ends are tucked into the body, thus forming the core. No sleeves are used.

Center of gravity. The center of gravity of any object is the point in the object around which its weight is evenly distributed. If you could put a support under that point, you could balance the object on the support.

Certified crane inspector. A crane certifier accredited by the department.

Certified welder. A welder who meets nationally recognized certification requirements applicable to the task being performed.

Choker hitch. A method of rigging a sling in which the sling is passed around the load, then through one loop eye, end fitting, or other device, with the other loop eye or end fitting attached to the lifting device. This hitch can be done with a sliding choker hook or similar device.

Climbing. The process in which a tower crane is raised or lowered to a new working height, either by adding or removing tower sections to the top of the crane (top climbing), or by a system in which the entire crane is raised or lowered inside the structure (inside climbing).

Come-a-long. A mechanical device typically consisting of a chain or cable attached at each end that is used to facilitate movement of materials through leverage.

Competent person. One who is capable of identifying existing and predictable hazards in the surroundings or working conditions which are unsanitary, hazardous, or dangerous to employees, and who has authorization to take prompt corrective measures to eliminate them.

Construction work. (For the purposes of this part) all or any part of excavation, construction, erection, alteration, repair, demolition, and dismantling of buildings and other structures and all related operations; the excavation , construction, alteration, and repair of sewers, trenches, caissons, conduits, pipelines, roads, and all related operations; the moving of buildings and other structures, and the construction, alteration, repair, or removal of wharfs, docks, bridges, culverts, trestles, piers, abutments, or any other related construction, alteration, repair , or removal work. Construction work does not include the normal day-to-day activities at manufacturing facilities or powerhouses.

Controlled load lowering. Lowering a load by means of a mechanical hoist drum device that allows a hoisted load to be lowered with maximum control using the gear train or hydraulic components of the hoist mechanism. Controlled load lowering requires the use of the hoist drive motor, rather that the load hoist brake, to lower the load

Controlling entity. **A**n employer that is a prime contractor, general contractor, construction manager or any other legal entity which has the overall responsibility for the construction of the projects, it is planning, quality and completion.

Counterjib (counterweight jib). A horizontal member of the tower crane on which the counterweights and usually the hoisting machinery are mounted.

Counterweight. Weight used to supplement the weight of equipment in providing stability for lifting loads by counterbalancing those loads.

Crane. Power-operated equipment used in construction that can hoist, lower, and horizontally move a suspended load. "Crane" includes, but is not limited to: Articulating boom cranes, such as knuckle-boom cranes; crawler cranes; floating cranes; cranes on barges; locomotive cranes; mobile cranes, such as wheel-mounted, rough-terrain, all-terrain, commercial truck mounted, and boom truck cranes; multipurpose machines when configured to hoist and lower by means of a winch or hook and horizontally move a suspended load; industrial cranes, such as carry-deck cranes; dedicated pile drivers; service/mechanic trucks with a hoisting device; a crane on a monorail; tower cranes, such as fixed jib, hammerhead boom, luffing boom, and self-erecting; pedestal cranes; portal cranes; overhead and gantry cranes; straddle cranes; side-boom tractors; derricks; and variations of such equipment.

Crane/derrick type. Cranes or derricks as established by American Society of Mechanical Engineers (ASME). Crane operator means an individual engaged in the operation of a crane.

Crane level indicator. A device for determining true horizontal (also see safety devices).

Crawler crane. Equipment that has a type of base mounting which incorporates a continuous belt of sprocket driven track.

Critical lift. A lift that:

- Exceeds 75% of the crane or derrick rated load chart capacity; or
- Requires the use of more than one crane or derrick.

Cross rod. A wire used to join spirals of metal mesh to form a complete fabric. See Figure 22.

Crossover points. Locations on a wire rope which is spooled on a drum where one layer of rope climbs up on and crosses over the previous layer. This takes place at each flange of the drum as the rope is spooled onto the drum, reaches the flange, and begins to wrap back in the opposite direction.

Dedicated channel. A line of communication assigned by the employer who controls the communication system to only one signal person and crane/derrick or to a coordinated group of crane/derrick/signal persons.

Dedicated drilling rig. A machine which creates bore holes and/or shafts in the ground.

Dedicated pile-driver. A machine that is designed to function exclusively as a pile-driver. These machines typically have the ability to both hoist the material that will be pile-driven and to pile-drive that material.

Dedicated spotter (power lines). To be considered a dedicated spotter, the requirements of WAC 296-155-53302 (signal person qualifications) must be met and his/her sole responsibility is to watch the separation between the power line and; the equipment, the load line and load (including rigging and lifting accessories), and ensure through communication with the operator that the applicable minimum approach distance is not breached.

Derrick. An apparatus consisting of a mast or equivalent member held at the end by guys or braces, with or without a boom, for use with a hoisting mechanism and operating ropes.

Design factor. The ratio between nominal or minimum breaking strength and rated load.

Digger derrick. A multipurpose vehicle-mounted machine which is primarily designed to accommodate components that dig holes, set poles and position materials and apparatus.

Directly under the load. A part or all of an employee is directly beneath the load.

Dismantling. Includes partial dismantling (such as dismantling to shorten a boom or substitute a different component).

Drum rotation indicator. A device on a crane or hoist which indicates in which direction and at what relative speed a particular hoist drum is turning.

Electrical contact. When a person, object, or equipment makes contact or comes close in proximity with an energized conductor or equipment that allows the passage of current.

Employer-made equipment. Floating cranes/derricks designed and built by an employer for your own use.

Encroachment. Where any part of the crane, load line or load (including rigging and lifting accessories) breaches a minimum clearance distance that this part requires to be maintained from a power line.

Equipment criteria. Instructions, recommendations, limitations and specifications.

Fabric (metal mesh). The flexible portion of the sling exclusive of end fittings consisting of a series of transverse spirals and cross rods.

Fall protection equipment. Guardrail systems, safety net systems, personal fall arrest systems, positioning device systems or fall restraint systems.

Fall restraint system. A fall protection system that prevents the user from falling any distance. The system is comprised of either a body belt or body harness, along with an anchorage, connectors and other necessary equipment. The other components typically include a lanyard, and may also include a lifeline and other devices.

Fall zone. The area (including, but not limited to, the area directly beneath the load) in which it is reasonably foreseeable that partially or completely suspended materials could fall in the event of an accident.

Flange points. A point of contact between rope and drum flange where the rope changes layers.

Floating cranes/derricks. Equipment designed by the manufacturer (or employer) for marine use by permanent attachment to a barge, pontoons, vessel or other means of flotation.

Free fall (of the load line). When only the brake is used to regulate the descent of the load line (the drive mechanism is not used to drive the load down faster or retard its lowering).

Free rated load test. Testing stability and operation of crane, carrier, wheels, tires, tracks, brakes, etc., under load, when lifting without outriggers and/or traveling with the load are permitted at the activity for the type of crane being tested.

Free surface effect. The uncontrolled transverse movement of liquids in compartments which reduce a vessel's transverse stability.

Functional testing. The testing of a crane, typically done with a light load or no load, to verify the proper operation of a crane's primary function, i.e., hoisting, braking, booming, swinging, etc. A functional test is contrasted to testing the crane's structural integrity with heavy loads.

Gin pole derrick. **A** boom without a mast which has guys arranged from its top to permit leaning the mast in one or more directions. The load is lifted and lowered by ropes reeved through sheaves or blocks at the top of the mast and the lower block.

Ground conditions. The ability of the ground to support the equipment (including slope, compaction, and firmness).

Ground crew. Those individuals who are involved in the personnel lift, other than the hoisting equipment operator and the platform occupants. These individuals include riggers, signal persons, and supervision.

Gudgeon pins. A pin connecting the mast cap to the mast allowing rotation of the mast.

Guy. A rope used to steady or secure the mast, boom, or other member in the desired position.

Hairpin anchors. A hairpin-shaped, guy-supporting anchor that is placed on footings or walls before concrete is poured and held in place by the cured concrete.

Hitch (hitched). A method of rigging (attaching) a sling temporarily to a load or object for the purpose of lifting.

Hoist. A mechanical device for lifting and lowering loads by winding rope onto or off a drum.

Hoisting. The act of raising, lowering or otherwise moving a load in the air with equipment covered by this standard. As used in this standard, "hoisting" can be done by means other than wire rope/hoist drum equipment.

Hoisting equipment. A machine for lifting and lowering a load and moving it horizontally. The machine may be fixed or mobile and be driven manually, by power, or by a combination of both.

Hook latch means a mechanical device used to close the throat opening of a hook.

Insulating link/device means an insulating device listed, labeled, or accepted by a nationally recognized testing laboratory in accordance with 29 C.F.R. 1910.7.

Intermediate rail means the middle member of a barrier along the edges of a platform, located approximately one-half the distance between the platform floor and top rail.

Jib means an extension attached to the boom point to provide added boom length for lifting specified loads. The jib may be in line with the boom or offset to various angles in the vertical plane of the boom. For tower cranes, see boom (tower cranes).

Jib stop (also referred to as a jib backstop), is the same type of device as a boom stop but is for a fixed or luffing jib.

Land crane/derrick means equipment not originally designed by the manufacturer for marine use by permanent attachment to barges, pontoons, vessels, or other means of flotation.

List means the angle of inclination about the longitudinal axis or a barge, pontoons, vessel, or other means of flotation.

Live boom means a boom whose lowering is controlled by a brake without the aid of other lowering retarding devices (free-fall capable).

Live load line means a load line whose lowering is controlled by a brake without the aid of other lowering retarding devices (free fall capable).

Load is the weight of the object being lifted or lowered, including the weight of the load-attaching equipment such as the load block, ropes, slings, shackles, and any other auxiliary attachment.

Load moment (or rated capacity) indicator means a system which aids the equipment operator by sensing the overturning moment on the equipment, i.e., load X radius. It compares this lifting condition to the equipment's rated capacity, and indicates to the operator the percentage of capacity at which the equipment is working. Lights, bells, or buzzers may be incorporated as a warning of an approaching overload condition.

Load moment (or rated capacity) limiter means a system which aids the equipment operator by sensing the overturning moment on the equipment, i.e., load X radius. It compares this lifting condition to the equipment's rated capacity, and when the rated capacity is reached, it shuts off power to those equipment functions which can increase the severity of loading on the equipment, e.g., hoisting, telescoping out, or luffing out. Typically, those functions which decrease the severity of loading on the equipment remain operational, e.g., lowering, telescoping in, or luffing in.

Load ratings means a set of rated loads for stipulated hoisting equipment configurations and operating conditions.

Load sustaining/bearing parts means those parts of a crane that support the crane or load and upon failure could cause dropping, uncontrolled shifting, or uncontrolled movement of the crane or load.

Locomotive crane means a crane mounted on a base or car equipped for travel on a railroad track.

Luffing boom is a member hinged to the rotating superstructure and used for supporting the hoisting tackle.

Luffing jib limiting device is similar to a boom hoist limiting device, except that it limits the movement of the luffing jib.

Marine worksite. A construction worksite located in, on or above the water.

Master coupling link. An alloy steel welded coupling link used as an intermediate link to join alloy steel chain to master links.

Master link. Forged or welded steel link used to support all members (legs) of an alloy steel chain sling or wire rope sling.

Mechanical coupling link (alloy steel chain). A nonwelded, mechanically closed link used primarily to attach fittings to allow steel chain.

Mobile cranes. A lifting device incorporating a cable suspended latticed boom or hydraulic telescopic boom designed to be moved between operating locations by transport over the road.

Moving point-to-point. The times during which an employee is in the process of going to or from a work station.

Multipurpose machine. A machine that is designed to be configured in various ways, at least one of which allows it to hoist (by means of a winch or hook) and horizontally move a suspended load. For example, a machine that can rotate and can be configured with removable forks/tongs (for use as a forklift) or with a winch pack, jib (with a hook at the end) or jib used in conjunction with a winch when configured with the forks/tongs, it is not covered by this part. When configured with a winch pack, jib (with a hook at the end) or jib used in conjunction with a winch, it is covered by this part.

Multiple lift rigging. A rigging assembly manufactured by wire rope rigging suppliers that facilitates the attachment of up to five independent loads to the hoist rigging of a crane.

Nationally recognized accrediting agency. An organization that, due to its independence and expertise, is widely recognized as competent to accredit testing organizations.

Nonconductive. Because of the nature and condition of the materials used, and the conditions of use (including environmental conditions and condition of the material), the object in question has the property of not becoming energized (that is, it has high dielectric properties offering a high resistance to the passage of current under the conditions of use).

Nonstandard tower crane base. Any deviation from the structural support or base configuration recommended by the crane manufacturer.

Occasional or routine maintenance and repair work. Regular, customary and foreseeable work necessary to keep equipment in good repair and/or condition. This also includes regular, customary and foreseeable work necessary to return equipment to sound condition after damage.

Operational aid. An accessory that provides information to facilitate operation of a crane or that takes control of particular functions without action of the operator when a limiting condition is sensed. Examples of such devices include, but are not limited to, the following: Anti-two-block device, rated capacity indicator, rated capacity (load) limiter, boom angle or radius indicator, lattice boom hoist disconnect device, boom length indicator, drum rotation indicator, load indicator, and wind speed indicator.

Operational controls. Levers, switches, pedals and other devices for controlling equipment operation.

Operator. A person who is operating the equipment.

Outriggers. Extendable or fixed members attached to the mounting base, which rests on supports at the outer ends, used to support the crane.

Overhead/bridge and gantry cranes. Includes overhead/bridge cranes, cranes on monorails, under hung cranes, semigantry, cantilever gantry, wall cranes, storage bridge cranes, launching gantry cranes, and similar equipment, irrespective of whether it travels on tracks, wheels, or other means.

Pendants. Includes both wire and bar types. Wire type: A fixed length of wire rope with mechanical fittings at both ends for pinning segments of wire rope together. Bar type: Instead of wire rope, a bar is used. Pendants are typically used in a latticed boom crane system to easily change the length of the boom suspension system without completely changing the rope on the drum when the boom length is increased or decreased.

Personal fall arrest system. A system used to arrest an employee in a fall from a working level. It consists of an anchorage, connectors, and a body harness and may include a lanyard, deceleration device, lifeline, or suitable combination of these.

Personnel lifting. Raising, lowering, or transporting personnel using a crane/derrick.

Personnel platform – boom attached. A platform attached to the boom of the crane.

Personnel platform – suspended. A platform attached to a crane/derrick using wire rope, chain, or jointed attachment and that has no installed motion controls for the platform itself.

Personnel platform suspension system. The rope or chain slings and other components, including fastening devices, used to connect the crane/derrick to the personnel platform.

Platform occupant. A person who is within the guardrail barrier while the personnel platform is in a hoisted position.

Platform rating. The maximum capacity of a personnel lifting platform, established by the platform manufacturer, in terms of total weight and the number of occupants allowed.

Portal crane. A type of crane consisting of a rotating upperstructure, hoist machinery, and boom mounted on top of a structural gantry which may be fixed in one location or have travel capability. The gantry legs or columns usually have portal openings in between to allow passage of traffic beneath the gantry.

Power controlled lowering. A system or device in the power train, other than the load hoist brake, that can regulate the lowering rate of speed of the load hoist mechanism.

Powerhouse. A plant wherein electric energy is produced by conversion from some other form of energy (e.g., chemical, nuclear, solar, mechanical, or hydraulic) by means of suitable apparatus. This includes all generating station auxiliaries and other associated equipment required for the operation of the plant. Not included are stations producing power exclusively for use with communication systems.

Power lines. Electrical distribution and electrical transmission lines.

Procedures. **I**nclude, but are not limited to: instructions, diagrams, recommendations, warnings, specifications, protocols, and limitations.

Proximity alarm. A device that provides a warning of proximity to a power line that has been listed, labeled or accepted by a nationally recognized testing laboratory in accordance with 29 C.F.R. 1910.7.

Qualified crane operator means a crane operator who meets the requirements established by the department under RCW 49.17.430.

Qualified evaluator (not a third party). A person employed by the signal person's or the rigger's employer (as applicable) who has demonstrated that he/she is competent in accurately assessing whether individuals meet the qualification requirements in this part for a signal person or a rigger.

Qualified evaluator (third party). **A**n entity that, due its independence and expertise, has demonstrated that it is competent accurately assessing whether individuals meet the qualification requirements in this part for a signal person or a rigger.

Qualified person. A person who, by possession of a recognized degree, certificate, or professional standing, or who by extensive knowledge, training and experience, successfully demonstrated the ability to solve/resolve problems relating to the subject matter, the work, or the project.

Qualified rigger. A rigger who meets the requirements in WAC 296-155-53306.

Qualified signal person is a signal person who meets the requirements in WAC 296-155-53302.

Range control limit device. A device that can be set by an equipment operator to limit movement of the boom or jib tip to a plane or multiple planes.

Range control warning device. A device that can be set by an equipment operator to warn that the boom or jib tip is at a plane or multiple planes.

Rated capacity. The maximum working load permitted by the manufacturer under specified working conditions. Such working conditions typically include a specific combination of factors such as equipment configuration, radii, boom length, and other parameters of use.

Rated capacity indicator. See load moment indicator.

Rated capacity limiter. See load moment limiter.

Repetitive pickup points. Refer to, when operating on a short cycle operation, the rope being used on a single layer and being spooled repetitively over a short portion of the drum.

Rotation resistant rope. **A** type of wire rope construction which reduces the tendency of a rope to rotate about its axis under load. Usually, this consists of an inner system of core strands laid in one direction covered by an outer system of strands laid in the opposite direction.

RPE. A registered professional engineer licensed under RCW 18.43.040(1).

RPSE. A registered professional structural engineer licensed under RCW 18.43.040(1).

Running wire rope. A wire rope that moves over sheaves or drums.

Runway. A firm, level surface designed, prepared and designated as a path of travel for the weight and configuration of the crane being used to lift and travel with the crane suspended platform. An existing surface may be used as long as it meets these criteria.

Safety devices, examples of safety devices are, but are not limited to, the following: Horn, boom/jib or trolley stops, crane level indicator, hydraulic holding device/check valve, rail clamps, rail stops, brakes, deadman control or forced neutral return control, emergency stop switch, guards, handrails, audible and visual alarms, etc.

Safety or health standard. A standard adopted under this chapter.

Section means a section of this part, unless otherwise specified.

Side-boom crane. A track-type or wheel-type tractor having a boom mounted on the side of the tractor, used for lifting, lowering, or transporting a load suspended on the load hook. The boom or hook can be lifted or lowered in a vertical direction only.

Sling. An assembly to be used for lifting when connected to a lifting mechanism. The upper portion of the sling is connected to the lifting mechanism and the lower supports the load, as described in this part.

Special hazard warnings. Warnings of site-specific hazards (for example, proximity of power lines).

Spiral. A single transverse coil that is the basic element from which metal mesh is fabricated.

Stability (flotation device). The tendency of a barge, pontoons, vessel or other means of flotation to return to an upright position after having been inclined by an external force.

Stabilizer. An extendable or fixed member attached to the mounting base to increase the stability of the crane, but that may not have the capability of relieving all of the weight from the wheels or tracks.

Standard method. The hand signals established in the applicable ASME B30 series and WAC 296-155-56400, Mobile Crane Hand Signal Chart.

Standing wire rope. A supporting wire rope which maintains a constant distance between the points of attachment to the two components connected by the wire rope.

Superstructure. See upperworks.

Supporting materials. Blocking, mats, cribbing, marsh buggies (in marshes/wetlands), or similar supporting materials or devices.

Taglines. A rope (usually fiber) attached to a lifted load for purposes of controlling load spinning and pendular motions or used to stabilize a bucket or magnet during material handling operations.

Tender. An individual responsible for monitoring and communication with a diver.

Tilt up or tilt down operations. Raising/lowering a load from the horizontal to vertical or vertical to horizontal.

Toe board. A vertical barrier at foot level, along the edges of the platform, to protect against material from falling over the edge.

Top rail. The top member of a barrier along the edges of a platform to protect against persons from falling off the platform.

Tower crane. A type of lifting structure which utilizes a vertical mast or tower to support a working boom (jib) in an elevated position. Loads are suspended from the working boom. While the working boom may be of the fixed type (horizontal or angled) or have luffing capability, it can always rotate to swing loads, either by rotating on the top of the tower (top slewing) or by the rotation of the tower (bottom slewing). The tower base may be fixed in one location or ballasted and moveable between locations. Mobile cranes that are configured with a luffing jib and/or tower attachments are not considered tower cranes under this part.

Travel. The function of the hoisting equipment moving under its own power from one location to another.

Travel bogie (tower cranes). An assembly of two or more axles arranged to permit vertical wheel displacement and equalize the loading on the wheels.

Trim. The angle of inclination about the transverse axis of a barge, pontoons, vessel or other means of flotation.

Two blocking. A condition in which a component that is uppermost on the hoist line such as the load block, hook block, overhaul ball, or similar component, comes in contact with the boom tip, fixed upper block or similar component. This binds the system and continued application of power can cause failure of the hoist rope or other component.

Unavailable procedures. Procedures that are no longer available from the manufacturer, or have never been available from the manufacturer.

Upperstructure. See upperworks.

Upperworks. The revolving frame of equipment on which the operating machinery (and many cases the engine) are mounted along with the operator's cab. The counterweight is typically supported on the rear of the upperstructure and the boom or other front end attachment is mounted on the front.

Up to. "up to and including".

Vertical hitch. A method of rigging a sling in which the load is attached to the loop eye or end fitting at one end of the sling and the loop eye or end fitting at the other end attached to the lifting device. Any hitch less than five degrees from the vertical may be considered a vertical hitch.

Wire rope. A flexible rope constructed by laying steel wires into various patterns of multi-wired strands around a core system to produce a helically wound rope.

Working load. The external load applied to the hoisting equipment, including the personnel lifting platform, its contents, and the load attaching equipment, such as lowered load block, shackles, and slings.

[Statutory Authority: RCW 49.17.010, .040, .050, and .060. 16-09-085 (Order 15-08), § 296-155-52902, filed 04/19/16, effective, 05/20/16. Statutory Authority: RCW 49.17.010, .004, .050, and .060. 13-02-068 (Order 12-14), § 296-155-52902, filed 12/31/12, effective 02/01/13. Statutory Authority: RCWs 47.17.010, 49.17.040, 49.17.050, 49.17.440 and 49.17.060. 12-01-086 (Order 08-32), § 296-155-52902, filed 12/20/11, effective 02/01/12. Statutory Authority: RCW 49.17.010, .040, .050, and .060. 10-14-100 (Order 10-11), § 296-155-52902, filed 07/06/10, effective 09/01/10. Statutory Authority: RCW 49.17.010, .040, .050, and .060. 08-22-080 (Order 07-28), § 296-155-52902, filed 11/04/08, effective 01/01/10.]

WAC 296-155-531 Crane certifier accreditation process.

[Statutory Authority: RCW 49.17.010, .040, .050, and .060. 08-22-080 (Order 07-28), § 296-155-531, filed 11/04/08, effective 01/01/09.]

WAC 296-155-53100 Accreditation of crane certifiers and derricks--Requirements.

(1) Any person engaging in the testing, examination or inspection for the certification of a crane, used in lifting at a construction site, must apply for and obtain a certificate of accreditation from the department pursuant to this rule. For the purposes of this rule an "accredited crane certifier" refers to any individual holding a certificate of accreditation pursuant to this regulation.

Any person authorized by the department to certify maritime cranes prior to the effective date of this rule may continue to perform services under this regulation until January 1, 2012. Any accredited crane certifier desiring to continue providing services pursuant to this rule must have applied for and obtained a certificate of accreditation under these rules from the department prior to January 1, 2012. Maritime certifiers wishing to perform construction crane certifications must notify the department that they will perform construction crane certifications. In addition, the maritime certifier must specify which cranes they are qualified to inspect under their maritime certificate. The department may issue these individuals a provisional accreditation specifying the crane types they are authorized to inspect which will be valid through December 31, 2011, or upon expiration of their maritime certification, whichever is earlier. Any provisionally accredited crane certifier desiring to continue providing services pursuant to this rule must have applied for and obtained a certificate of accreditation under these rules from the department prior to January 1, 2012.

(2) Crane certifiers accredited by any other state or governmental entity may be authorized to inspect cranes in Washington state provided the certifier submits an application and resume along with the certificate of accreditation from that state or governmental entity, and the types of cranes they are authorized to inspect. The department may issue these individuals a provisional accreditation specifying the crane types they are authorized to inspect which will be valid through December 31, 2011, or upon expiration of their out-of-state certification, whichever is earlier. Any provisionally accredited crane certifier desiring to continue providing services pursuant to this rule must have applied for and obtained a certificate of accreditation under these rules from the department prior to January 1, 2012.

(3) No person that has modified, altered, or repaired a crane which affected a load sustaining member of the crane may conduct the certifying inspection and proof load testing of that particular crane within the same certification period.

[Statutory Authority: RCW 49.17.010, .040, .050, and .060. 08-22-080 (Order 07-28), § 296-155-53100, filed 11/04/08, effective 01/01/09.]

WAC 296-155-53102 Accreditation--Application form and applicant qualifications.

(1) An accreditation to certify cranes pursuant to this rule may be obtained by submitting a completed application to the division of occupational safety and health (DOSH) and successfully completing written examinations developed and administered by the department or its authorized representative. Application forms may be obtained by calling the:

Crane certification section of DOSH 360-902-4943 or by written request to:

P.O. Box 44650, Olympia, WA 98504-4650

(2) An applicant seeking an accreditation must satisfy all of the following criteria:

(a) An application with an attached resume must be submitted to the department based on experience with the various crane types per the ASME B30 series. The application and resume must include knowledge, training and experience with verifiable references.

(b) All applicants must possess knowledge of chapter 296-155 WAC, Safety standards for construction work, as well as American Society of Mechanical Engineers (ASME) standards, relating to the design, testing, inspection and operation of cranes, including those specifically applicable to the types of cranes for which an accreditation will be issued.

(c) All applicants must demonstrate at least 5 years crane related experience, of which two years must be actual crane inspection activities. The other 3 years may include experience in duties such as a crane operator, crane mechanic, crane shop foreman, crane operations supervision, or rigging specialist. Related education may be substituted for related experience at a ratio of two years of education for one year of experience up to 3 years. Related education could include such courses in engineering, physics, applied mathematics, applied science courses in nondestructive testing, construction technology, technical courses in heavy equipment mechanic, welding technology, etc.

(3) **Application form**. Any application for accreditation will be accepted by the department upon the filing of a completed application. All information and attachments must be given under penalty of perjury. The application must include, but not be limited to, the following:

(a) A statement of the crane types per the ASME B30 series the applicant desires to certify pursuant to the accreditation.

(b) A statement of qualifications and experience, including their capacities, satisfying at a minimum the criteria set forth in this section as well as any and all other qualifications the applicant wishes the department to consider.

(c) Any other relevant information the applicant desires to be considered by the department.

(4) **Written examinations**. Applicants to be approved for accreditation must successfully complete the written examinations administered by the department or its authorized representative.

(a) Once the department receives the application and resume, the department will make the determination and notify the applicant if they meet the minimum qualifications to take the written examinations.

(b) The first written examination will include a general knowledge of operation, testing, inspection and maintenance requirements, and the duties and recordkeeping responsibilities required by this rule.

(c) The other written examinations will include safe operating and engineering principles and practices with respect to specific crane types subject to the accreditation, including inspection and proof loading requirements.

[Statutory Authority: RCW 49.17.010, .040, .050, and .060. 16-09-085 (Order 15-08), § 296-155-53102, filed 04/19/16, effective, 05/20/16. Statutory Authority: RCW 49.17.010, .040, .050, and .060. 08-22-080 (Order 07-28), § 296-155-53102, filed 11/04/08, effective 01/01/09.]

WAC 296-155-53104 Issuance of accreditation.

The department may impose restrictions on the scope and use of the accreditation, such as limiting it to specific types of cranes based upon the qualifications of the applicant. The accreditation issued by the department will identify any limitations imposed by the department and the types of cranes the certifier is authorized to certify. The department must deny issuance of an accreditation if the applicant does not satisfy the requirements of this rule.

[Statutory Authority: RCW 49.17.010, .040, .050, and .060. 08-22-080 (Order 07-28), § 296-155-53104, filed 11/04/08, effective 01/01/09.]

WAC 296-155-53106 Accreditation application--Processing time.

(1) Within 45 calendar days of receipt of a completed application for an accreditation, the department must inform the applicant in writing that it is either complete and accepted for filing or that it is deficient and what specific information or documentation is required to complete the application and will inform the applicant if the applicant is eligible to take the written examination. An application is considered complete if it is in compliance with the requirements of this rule.

(2) Within 75 calendar days from the date of completion of the written examinations, the department must inform the applicant in writing of its decision regarding the issuance of the certificate of accreditation.

[Statutory Authority: RCW 49.17.010, .040, .050, and .060. 16-09-085 (Order 15-08), § 296-155-53106, filed 04/19/16, effective, 05/20/16. Statutory Authority: RCW 49.17.010, .040, .050, and .060. 08-22-080 (Order 07-28), § 296-155-53106, filed 11/04/08, effective 01/01/09.]

WAC 296-155-53108 Duration and renewal of an accreditation.

(1) The accreditation will be valid for 3 years. Crane certifiers must complete 40 hours of crane related training every 3 years, in courses recognized by the department.

(2) You must file application for renewal must be filed with the department not less than 60 days prior to expiration of the accredited crane certifier's certification. A renewal may be obtained by filing a completed application for renewal meeting the requirements of WAC 296-155-53102 hereof providing the applicant has been actively inspecting cranes during their prior accreditation period. An applicant is considered active if he/she has certified/inspected at least 21 cranes during their accreditation period. If the applicant certified cranes in another state, then that applicant must provide documentation showing they were active during their accreditation period. An applicant who has not certified/inspected at least 21 cranes during the accreditation period may take the written exams to become recertified.

(3) At a minimum, all applicants for renewal must successfully complete the written examinations every 6 years.

[Statutory Authority: RCW 49.17.010, .040, .050, and .060. 16-09-085 (Order 15-08), § 296-155-53108, filed 04/19/16, effective, 05/20/16. Statutory Authority: RCW 49.17.010, .040, .050, and .060. 10-14-100 (Order 10-11), § 296-155-53108, filed 07/06/10, effective 09/01/10. Statutory Authority: RCW 49.17.010, .040, .050, and .060. 08-22-080 (Order 07-28), § 296-155-53108, filed 11/04/08, effective 01/01/09.]

WAC 296-155-53110 Revocation or suspension of an accreditation.

(1) The department may suspend or revoke a certificate issued under the provisions of these rules upon the following grounds:

(a) Permitting the duplication or use of one's own accreditation certificate by another;

(b) Performing work for which accreditation has not been received;

(c) Any person who obtains accreditation through fraudulent representation of accreditation requirements such as education, training, professional registration, or experience;

(d) Any person who falsifies training documentation;

(e) The holder of the certificate is found to be incompetent to carry out the work for which the certificate was issued;

(f) Gross negligence, gross incompetence, a pattern of incompetence, or fraud in the certification of a crane;

(g) Willful or deliberate disregard of any occupational safety standard while certifying a crane;

(h) Misrepresentation of a material fact in applying for, or obtaining, a license to certify under this chapter;

(i) Failure by an accredited crane certifier to maintain records;

(j) Failure by an accredited crane certifier to report crane safety deficiencies affecting the safe operation of a crane while in the process of conducting an annual certification inspection;

(k) Failure to meet or comply with the requirements of this rule or the limitations imposed on the accreditation; or

(l) Performance of work not in compliance with applicable laws and regulations.

(2) Before any certificate may be suspended or revoked, the certificate holder must be given written notice of the department's intention, mailed by certified mail, return receipt requested to the address as shown on the application form. The notice must specify the reasons for the department action. The department must also include within the notice of revocation or suspension specific conditions which must be met before the applicant will be entitled to apply for a new certification.

(3) A suspension or revocation order may be appealed to division of occupational safety and health (DOSH) or the board of industrial insurance appeals within 15 working days after the suspension or revocation order is entered. The notice of appeal may be filed with the department or the board of industrial insurance appeals and must include the accredited certifier's name, address, certifier number, telephone number, reason for appeal, their signature and date. DOSH may reassume jurisdiction over the matter following timelines set out for appeal in WAC 296-900-17005. Should DOSH reassume jurisdiction over the matter, the process for reassumption outlined in WAC 296-900-17005 must be followed. If the accredited certifier does not agree with the department's redetermination, the matter will be forwarded to the board of industrial insurance appeals upon receiving further appeal from the accredited certifier. The board of industrial insurance appeals must hold the hearing in accordance with procedures established in RCW 49.17.140. Any party aggrieved by an order of the board of industrial insurance appeals may obtain superior court review in the manner provided in RCW 49.17.150.

(4) The filing of an appeal must not stay the suspension or revocation, and such action must remain in effect until such time as the applicant presents proof that the specified written conditions required by the department are met or until otherwise ordered after resolution of the appeal.

[Statutory Authority: RCW 49.17.010, .040, .050, and .060. 16-09-085 (Order 15-08), § 296-155-53110, filed 04/19/16, effective, 05/20/16. Statutory Authority: RCWs 47.17.010, 49.17.040, 49.17.050, 49.17.440 and 49.17.060. 12-01-086 (Order 08-32), § 296-155-53110, filed 12/20/11, effective 02/01/12. Statutory Authority: RCW 49.17.010, .040, .050, and .060. 08-22-080 (Order 07-28), § 296-155-53110, filed 11/04/08, effective 01/01/09.]

WAC 296-155-53112 Monitoring of accredited crane certifiers.

The division of occupational safety and health must monitor accredited crane certifiers to ensure that these certifiers certify cranes in accordance with all applicable Washington state laws and regulations. Monitoring activities will include, but not be limited to, audits of crane certifier's activities, complaint inspections, referrals, or accident investigations.

[Statutory Authority: RCW 49.17.010, .040, .050, and .060. 08-22-080 (Order 07-28), § 296-155-53112, filed 11/04/08, effective 01/01/09.]

WAC 296-155-53114 Issuance of temporary and annual certificates of operation.

(1) Accredited crane certifiers will issue a temporary certificate of operation if upon inspection and load proof testing no deficiencies were found that would affect the safe operation of the crane.

(2) The accredited crane certifier will submit inspection worksheets and proof of load testing to the department within 10 working days from the completion of the inspection and load proof test for consideration of the department for the issuance of a permanent certificate of operation.

(3) If the accredited crane certifier upon inspection of a crane identifies deficiencies that would affect the safe operation or load handling capabilities of the crane, the accredited crane certifier must notify the department within 5 working days from completion of the on-site inspection by submitting the worksheet that identifies the deficiencies. If deficiencies are found that affect the safe operation or load handling capabilities of the crane, no temporary certificate of operation will be issued until all identified deficiencies have been corrected and verified by an on-site visit by an accredited crane certifier.

(4) After the accredited crane certifier has verified that all deficiencies have been corrected and the crane has successfully passed a load proof test, the accredited crane certifier will issue a temporary certificate of operation. The accredited crane certifier will submit inspection worksheets and proof of load testing to the owner or lessee and within 10 days of completion of the inspection to the department for consideration of the department for the issuance of an annual certificate of operation.

(5) The accredited crane certifier must attach an identification sticker if not already attached and legible to each crane. The identification sticker number must be entered on the inspection worksheet submitted to the department. Identification stickers may only be removed by a department representative or an accredited crane certifier.

(6) Certificates of operation issued by the department under the crane certification program established in this section are valid for one year from the effective date of the temporary operating certificate issued by the certified crane inspector.

(7) The temporary or annual certificate of operation must be posted in the operator's cab or with the operator's manual.

(8) Maintaining required records. Accredited crane certifiers are required to maintain complete and accurate records pertaining to each crane of all inspections, tests and other work performed as well as copies of all notices of crane safety deficiencies, verifications of correction of crane safety deficiencies, and crane certifications issued for the previous 5 years and provide these records to the department upon request. Failure by an accredited crane certifier to maintain required records may result in accreditation suspension or revocation.

[Statutory Authority: RCW 49.17.010, .040, .050, and .060. 16-09-085 (Order 15-08), § 296-155-53114, filed 04/19/16, effective, 05/20/16. Statutory Authority: RCWs 47.17.010, 49.17.040, 49.17.050, 49.17.440 and 49.17.060. 12-01-086 (Order 08-32), § 296-155-53114, filed 12/20/11, effective 02/01/12. Statutory Authority: RCW 49.17.010, .040, .050, and .060. 08-22-080 (Order 07-28), § 296-155-53114, filed 11/04/08, effective 01/01/10.]

WAC 296-155-532 Crane certification requirements for cranes.

[Statutory Authority: RCW 49.17.010, .040, .050, and .060. 08-22-080 (Order 07-28), § 296-155-532, filed 11/04/08, effective 01/01/10.]

WAC 296-155-53200 General inspection criteria, wire rope inspection and removal criteria, and preproof load test requirements for all cranes.

(1) The accredited crane certifier must review the following documents as part of the crane certification process:

(a) Crane maintenance records of critical components to ensure maintenance of these components has been performed in accordance with the manufacturer's recommendations.

(b) Crane monthly and annual inspection documentation.

(2) **Safety devices**. Make sure all safety devices are installed on equipment in accordance with the requirements located in WAC 296-155-53410.

(3) **Operational aids**. Operations must not begin unless operational aids are in proper working order, except where the owner or lessee meets the specified temporary alternative measures. See WAC 296-155-53412 for the list of operational aids.

Note:	*All accredited crane certifiers must meet and follow the requirements relating to fall protection, located in chapter 296-155 WAC, Part C-1, Fall restraint and fall arrest.*

(4) **General.**

(a) The accredited crane certifier must determine that the configurations of the crane are in accordance with the manufacturer's equipment criteria.

(b) Where the manufacturer equipment criteria are unavailable, a registered professional engineer (RPE), familiar with the type of equipment involved, must ensure criteria are developed for the equipment configuration.

(5) **Wire rope.**

(a) Wire ropes must meet the crane or wire rope manufacturer's specifications for size, type and inspection requirements. In the absence of the manufacturer's specifications, follow the requirements for removal criteria located in this section, including Table 1.

Table 1 Wire Rope Inspection/Removal Criteria (See also Figure 1 Wire Rope)						
Category of Crane Types	**Running Ropes.* # of broken wires in**		**Rotation Resistant.* # of broken wires in**		**Standing Ropes.* # of broken wires**	
	1 rope lay	**1 strand in 1 lay**	**Specified diameters**		**In 1 lay beyond end connection**	**At end connection**
Mobile	6	3	2 (in 6xd)	4 (in 30xd)	3	2
Articulating	6	3	Consult rope mfg.	Consult rope mfg.	3	2
Tower	12	4	2 (in 6xd)	4 (in 30xd)	3	3
Self-Erector	6	3	2 (in 6xd)	4 (in 30xd)	3	2
Overhead & Bridge	12	4	2 (in 6xd)	4 (in 30xd)	--	--
Derricks	6	3	Consult rope mfg.	Consult rope mfg.	3	2

* Also remove if you detect 1 wire broken at the contact point with the core or adjacent strand; so called valley breaks or evidence from any heat damage from any cause.

Note: xd means times the "diameter."

(b) The accredited crane certifier must perform a complete and thorough inspection covering the surface of the working range plus 3 additional wraps on the drum of the wire ropes.

(c) If a deficiency is identified, an immediate determination must be made by the accredited crane certifier as to whether the deficiency constitutes a safety hazard. If the deficiency is determined to constitute a safety hazard, the crane must not be certified until:

(i) The wire rope is replaced and verified by the accredited crane certifier; or

(ii) If the deficiency is localized, the problem is corrected by severing the wire rope; the undamaged portion may continue to be used. Joining lengths of wire rope by splicing is prohibited.

(d) Remove wire rope from service if reduction from nominal diameter is greater than 5%.

(e) Replacement rope must be of a compatible size and have a strength rating at least as great as the original rope furnished or recommended by the crane manufacturer.

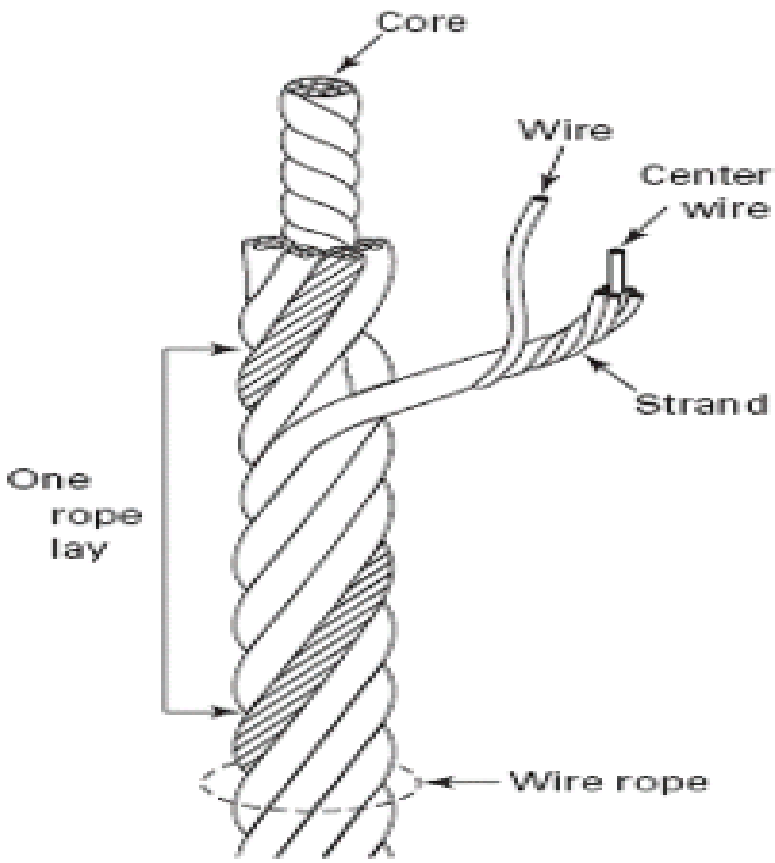

Figure 1-Wire Rope.

(6) **Sheaves.**

(a) Sheave grooves must be free from surface defects that could damage the rope**.** The cross-sectional radius at the bottom of the groove should be such as to form a close fitting saddle for the size of rope used. The sides of the groove must be tapered outward and rounded at the rim to facilitate entrance of the rope into the groove. Flange rims must run true about the axis of rotation.

(b) Sheave guards must be in place to:

(i) Guide the rope back into the sheave groove, when using ropes that can be momentarily unloaded.

(ii) Prevent ropes from becoming fouled when the block is lying on the ground with loose ropes.

(c) Sheave bearings, except for permanently lubricated ones, must have a means of lubrication.

(7) **Prior to performing a proof load test:**

(a) A safe test area must be selected and all traffic and unauthorized personnel and equipment must be cleared from test area. This test area must be roped off or otherwise secured to prevent entry of unauthorized personnel and equipment;

(b) Rigging gear must be inspected by a qualified person prior to using for load test of crane;

(c) You must ensure all load test personnel understand the safety procedures of the test;

(d) Proof load tests, with the exception of tower cranes, are overload tests and extreme caution must be observed at all times. Personnel must remain clear of suspended loads and areas where they could be struck in the event of boom failure. The test load must be raised only to a height sufficient to perform the test;

(e) During tests, safe operating speeds must be employed. Rated speeds in accordance with manufacturer's specifications need not be attained. Emphasis must be placed on the ability to safely control loads through all motions at normal speeds;

(f) Proof load tests require the use of freely suspended certified weights, or scaled weights using a certified scale with a current certificate of calibration; however, line pull test can be accomplished using a static test; and a certified scale with a current certificate of calibration;

(g) Proof load tests must not exceed the manufacturer's specifications. Where these specifications are unavailable, a registered professional engineer familiar with the type of equipment involved must develop written specifications.

[Statutory Authority: RCW 49.17.010, .040, .050, and .060. 16-09-085 (Order 15-08), § 296-155-53200, filed 04/19/16, effective, 05/20/16. Statutory Authority: RCWs 47.17.010, 49.17.040, 49.17.050, 49.17.440 and 49.17.060. 12-01-086 (Order 08-32), § 296-155-53200, filed 12/20/11, effective 02/01/12. Statutory Authority: RCW 49.17.010, .040, .050, and .060. 10-14-100 (Order 10-11), § 296-155-53200, filed 07/06/10, effective 09/01/10. Statutory Authority: RCW 49.17.010, .040, .050, and .060. 08-22-080 (Order 07-28), § 296-155-53200, filed 11/04/08, effective 01/01/10.]

WAC 296-155-53202 Additional inspection criteria and proof load testing--Mobile cranes.

(1) After it is determined that the crane configurations meet the criteria in WAC 296-155-53200, the accredited crane certifier must conduct a visual inspection of the following components, if applicable, which can be visually inspected without disassembly (not including removal of inspection covers):

(a) All control and drive mechanisms for adjustments interfering with proper operation and for excessive wear or contamination by lubricants or other foreign matter;

(b) Air, hydraulic, and other pressurized lines for deterioration or leakage, particularly those which flex in normal operation;

(c) Hydraulic system for proper fluid level;

(d) Safety latches on hooks for damage;

(e) Hooks for deformation, cracks, excessive wear, or damage such as from chemicals or heat;

(f) A legible and applicable operator's manual and load chart is in the operator's cab or station;

(g) A portable fire extinguisher, with a basic minimum extinguishing rating of 10 BC must be installed in the cab or at the machinery housing;

(h) Crane cleanliness and housekeeping. Inspect for trash, oil, grease, debris or excessive dirt on crane components and catwalks, if applicable;

(i) Wire rope reeving for compliance with the manufacturer's specifications;

(j) Wire rope, in accordance with WAC 296-155-53200(5);

(k) Electrical apparatus for malfunctioning, signs of apparent excessive deterioration, dirt or moisture accumulation;

(l) Tires (when in use) for proper inflation and condition;

(m) Ground conditions around the equipment for proper support, including ground settling under and around outriggers and supporting foundations, ground water accumulation, or similar conditions;

(n) The equipment for level position;

(o) Operator cab windows for significant cracks, breaks, or other deficiencies that would hamper the operator's view;

(p) Rails, rail stops, rail clamps and supporting surfaces when the equipment has rail traveling;

(q) Equipment structure (including the boom and, if equipped, the jib):

(i) Structural members: Deformed, cracked, or significantly corroded.

(ii) Bolts, rivets and other fasteners: Loose, failed or significantly corroded.

(iii) Welds for cracks.

(r) Sheaves and drums for cracks or significant wear;

(s) Parts such as pins, bearings, shafts, gears, rollers and locking devices for distortion, cracks or significant wear;

(t) Brake and clutch system parts, linings, pawls and ratchets for excessive wear;

(u) Safety devices and operational aids for proper operation (including significant inaccuracies);

(v) Gasoline, diesel, electric, or other power plants for safety-related problems (such as leaking exhaust and emergency shut-down feature), condition and operation;

(w) Chains and chain drive sprockets for excessive wear of sprockets and excessive chain stretch;

(x) Travel steering, brakes, and locking devices, for proper operation;

(y) Tires for damage or excessive wear;

(z) Hydraulic, pneumatic and other pressurized hoses, fittings and tubing, as follows:

(i) Flexible hose or its junction with the fittings for indications of leaks.

(ii) Threaded or clamped joints for leaks.

(iii) Outer covering of the hose for blistering, abnormal deformation or other signs of failure/impending failure.

(iv) Outer surface of a hose, rigid tube, or fitting for indications of excessive abrasion or scrubbing.

(aa) Hydraulic and pneumatic pumps and motors, as follows:

(i) Performance indicators: Unusual noises or vibration, low operating speed.

(ii) Loose bolts or fasteners.

(iii) Shaft seals and joints between pump sections for leaks.

(bb) Hydraulic and pneumatic cylinders, as follows:

(i) Drifting.

(ii) Rod seals and welded joints for leaks.

(iii) Cylinder rods for scores, nicks and dents.

(iv) Case (barrel) for significant dents.

(v) Rod eyes and connecting joints: Loose of deformed.

(cc) Outrigger pads/floats and slider pads for excessive wear or cracks; cribbing/dunnage for proper installation;

(dd) Electrical components and wiring for cracked or split insulation and loose or corroded terminations;

(ee) Legible warning labels and decals as required by the manufacturer;

(ff) Operator seat: Missing or unusable;

(gg) Equipped with original, or the equivalent, steps, ladders, handrails, guards;

(hh) Steps, ladders, handrails, and guards are in safe and usable condition;

(2) **Crane deficiencies**. If the accredited crane certifier determines other findings need to be monitored, the accredited crane certifier must provide written notification to the owner or lessee.

(3) **Operational testing**. An operational test must be made without a load applied to the hook of the following items if they are applicable to the crane to ensure they function correctly:

(a) Load lifting/hoisting and lowering mechanisms;

(b) Boom lifting/hoisting and lowering mechanisms;

(c) Boom extension and retraction mechanism;

(d) Swing mechanism;

(e) Travel mechanism;

(f) Brakes and clutches;

(g) Limit, locking, and safety devices;

(h) Suspension systems for cranes that work on rubber (tires); and

(i) During the operational testing, special attention must be paid to hydraulic and pneumatic valves: Spools (sticking, improper return to neutral, and leaks); leaks; valve housing cracks; relief valves.

(4) **Annual and quadrennial proof load testing.**

(a) Proof load tests must be completed on all hoist lines to at least 100%t but not to exceed 110% as configured. Any hoist line not proof load tested is not considered certified. The test load must be at least 100% but not to exceed 110% of rated capacity (i.e., for the crane's configuration of reeving, boom length, etc.). The rated capacity must be the capacity shown on the posted load chart or as limited by other factors such as hook block capacity or wire rope line pull if the crane is not fully reeved. The test load includes the weight of (or deduction values for) the hook, block, slings, and auxiliary lifting devices (and for some cranes hoist wire rope not accounted for in load charts), and the combined weight deduction values must be subtracted from the nominal test load in order to determine the amount of test weights to be used. Follow original equipment manufacturer (OEM) load chart instructions for weight deduction values. Check accuracy of load indicators where installed. Test procedures for these cranes must follow OEM procedures and recommendations.

(b) Annual proof load testing. After the crane has passed the visual and operational tests, a proof load test must be conducted in the as-configured condition and must be performed within the structural section of the manufacturer's load chart, as applicable. This test must be documented on the form or in the format approved by the department. A copy of this completed form and inspection worksheets must be sent to the department within 10 working days upon completion of the examination.

(c) Free rated load test ("on rubber"). Check the stability and operation of crane, carrier, wheels, tires, tracks, brakes, etc., under load by performing the following tests, when lifting without outriggers and/or traveling with the load are permitted at the activity for the type of crane being tested.

Note: Ensure all free rated load tests "on rubber" lifting requirements established by the OEM are complied with. Attach taglines to the load to control oscillation. For cranes with outriggers, extend outriggers and maintain minimal clearance (3 to 4 inches) above ground. Test personnel must stand clear of tires during load tests. This test is only required if the owner/lessee wants an "on rubber" certification. If the crane has "on rubber" capabilities and the owner does not desire this certification, the crane certifier must document it on the certification document.

(i) Maximum free rated load. Hoist maximum free rated test load at minimum possible radius over the rear (or over the front as required by the OEM). Slowly boom down to the maximum radius for the load, with boom and load hoist pawls (dogs) engaged where applicable, complete (d)(i)(A) and (B) of this subsection.

(A) Rotate through the appropriate working arc;

(B) Travel a minimum of 50 feet with test load over the rear (or front as required by the OEM) with the boom parallel to the longitudinal axis of the crane carrier.

(ii) Stability test. Repeat the step in (d)(i) of this subsection with a test load corresponding to the radii determined as follows: For telescoping boom cranes, test with the boom approximately halfway between fully retracted and fully extended but do not exceed OEM's boom length limitation for lifting on rubber. If no ratings are governed by stability, no stability test is required.

Note: When lifting test loads, always lift the load well within the maximum radius and slowly boom down to a premeasured radius. Lift the test load only high enough to perform the required tests.

[Statutory Authority: RCW 49.17.010, .040, .050, and .060. 16-09-085 (Order 15-08), § 296-155-53202, filed 04/19/16, effective, 05/20/16. Statutory Authority: RCWs 47.17.010, 49.17.040, 49.17.050, 49.17.440 and 49.17.060. 12-01-086 (Order 08-32), § 296-155-53202, filed 12/20/11, effective 02/01/12. Statutory Authority: RCW 49.17.010, .040, .050, and .060. 10-14-100 (Order 10-11), § 296-155-53202, filed 07/06/10, effective 09/01/10. Statutory Authority: RCW 49.17.010, .040, .050, and .060. 08-22-080 (Order 07-28), § 296-155-53202, filed 11/04/08, effective 01/01/10.]

WAC 296-155-53204 Additional inspection criteria and proof load testing--Articulating boom cranes.

(1) After it is determined that the crane configurations meet the criteria in WAC 296-155-53200, the accredited crane certifier must visually inspect the following items, if applicable, on cranes for sound physical condition and that they are functional within the manufacturer's recommendations (not including removal of inspection covers):

(a) All control and drive mechanisms for adjustments interfering with proper operation and for excessive wear or contamination by lubricants or other foreign matter;

(b) Safety devices for malfunction;

(c) All hydraulic hoses, particularly those which flex in normal operation of crane functions;

(d) Hooks and latches for deformation, chemical damage, cracks, and wear;

(e) Rope reeving for compliance with crane manufacturer's specifications;

(f) Electrical apparatus for malfunctioning, signs of excessive deterioration, dirt, and moisture accumulation;

(g) Hydraulic system for proper oil level and leaks;

(h) Excessively worn or damaged tires. Recommended inflation pressure, cuts, and loose wheel nuts;

(i) Connecting pins and locking device for wear and damage;

(j) Deformed, cracked, or corroded members in the crane structure and carrier;

(k) Loose bolts, particularly mounting bolts;

(l) Cracked or worn sheaves and drums;

(m) Worn, cracked, or distorted parts such as pins, bearings, shafts, gears, rollers, and locking devices;

(n) Excessive wear on brake and clutch system parts and lining;

(o) Travel steering, braking, and locking devices, for malfunction;

(p) Hydraulic, pneumatic and other pressurized hoses, fittings and tubing, as follows:

(i) Flexible hose or its junction with the fittings for indications of leaks.

(ii) Threaded or clamped joints for leaks.

(iii) Outer covering of the hose for blistering, abnormal deformation or other signs of failure/impending failure.

(iv) Outer surface of a hose, rigid tube, or fitting for indications of excessive abrasion or scrubbing;

(q) Hydraulic and pneumatic pumps and motors, as follows:

(i) Performance indicators: Unusual noises or vibration, low operating speed.

(ii) Loose bolts or fasteners.

(iii) Shaft seals and joints between pump sections for leaks;

(r) Hydraulic and pneumatic cylinders, as follows:

(i) Drifting.

(ii) Rod seals and welded joints for leaks.

(iii) Cylinder rods for scores, nicks and dents.

(iv) Case (barrel) for significant dents.

(s) Crane cleanliness and housekeeping. Inspect for trash, oil, grease, debris or excessive dirt on crane components and catwalks, if applicable;

(t) Legible warning labels and decals as required by the manufacturer;

(u) A portable fire extinguisher, with a basic minimum extinguishing rating of 10 BC must be installed in the cab or at the machinery housing;

(v) A legible and applicable operator's manual and load chart is in the operator's cab or station.

(2) **Annual proof load testing of articulating boom cranes.**

(a) Annual proof load testing. After the crane has passed the visual and operational tests, the accredited crane certifier must ensure a proof load test is conducted and must be performed within the structural and stability section of the manufacturer's load chart, as applicable. This test must be documented on the form or in the format approved by the department. A copy of this completed form and inspection worksheets must be sent to the department within 10 working days upon completion of the examination.

(b) Test loads must not be less than 100% or more than 110% of the rated load, unless otherwise recommended by the manufacturer.

(c) Hoist the test load to assure that the load is supported by the crane and held by the hoist brake(s).

(d) Swing the crane, if applicable, the full range of its swing.

(e) Boom the crane up and down within allowable working radius for the test load.

(f) Lower the test load, stop and hold the load with the brake(s).

[Statutory Authority: RCW 49.17.010, .040, .050, and .060. 16-09-085 (Order 15-08), § 296-155-53204, filed 04/19/16, effective, 05/20/16. Statutory Authority: RCW 47.17.010, 49.17.040, 49.17.050, 49.17.440 and 49.17.060. 12-01-086 (Order 08-32), § 296-155-53204, filed 12/20/11, effective 02/01/12. Statutory Authority: RCW 49.17.010, .040, .050, and .060. 08-22-080 (Order 07-28), § 296-155-53204, filed 11/04/08, effective 01/01/10.]

WAC 296-155-53206 Additional inspection criteria and proof load testing--Tower cranes.

(1) Tower cranes and tower crane assembly parts must be inspected by a crane certifier both prior to assembly, following erection of the tower crane, after each climbing operation, or reconfiguring the boom, jib, or counterjib before placing the crane in service.

(2) The accredited crane certifier must verify a registered professional structural engineer, licensed under chapter 18.43 RCW, has certified that the crane foundations/structural supports and underlying soil are adequate support for the tower crane with its maximum overturning moment.

(3) Prior to erecting a tower crane on a nonstandard tower crane base, the accredited crane certifier must verify that the engineering configuration of this base has been reviewed and acknowledged as acceptable by an independent registered professional structural engineer, licensed under chapter 18.43 RCW.

(4) The accredited crane certifier must review the following documents as part of the crane certification process for the current location and inspection period:

(a) Crane maintenance records of critical components to ensure maintenance of these components has been performed in accordance with the manufacturer's recommendations;

(b) Crane monthly and annual inspection documentation.

(5) After it is determined that the crane configurations meet the criteria in WAC 296-155-53200, the accredited crane certifier must visually inspect the following items, if applicable, on tower cranes for sound physical condition and that they are functional within the manufacturer's recommendations (not including removal of inspection covers):

(a) All control and drive mechanisms for interfering with proper operation and for excessive wear or contamination by lubricants or other foreign matter;

(b) Motion limiting devices for proper operation with the crane unloaded; each motion should be inched into its limiting device by carefully running at slow speed;

(c) Load limiting devices for proper operation and accuracy of settings;

(d) Air, hydraulic, and other pressurized lines for deterioration or leakage, particularly those which flex in normal operation;

(e) Hydraulic system for proper fluid level;

(f) Hydraulic, pneumatic and other pressurized hoses, fittings and tubing, as follows:

(i) Flexible hose or its junction with the fittings for indications of leaks.

(ii) Threaded or clamped joints for leaks.

(iii) Outer covering of the hose for blistering, abnormal deformation or other signs of failure/impending failure.

(iv) Outer surface of a hose, rigid tube, or fitting for indications of excessive abrasion or scrubbing;

(g) Hydraulic and pneumatic pumps and motors, as follows:

(i) Performance indicators: Unusual noises or vibration, low operating speed.

(ii) Loose bolts or fasteners.

(iii) Shaft seals and joints between pump sections for leaks;

(h) Hydraulic and pneumatic cylinders, as follows:

(i) Drifting.

(ii) Rod seals and welded joints for leaks.

(iii) Cylinder rods for scores, nicks and dents.

(iv) Case (barrel) for significant dents;

(i) Electrical components for malfunctioning, signs of apparent excessive deterioration, dirt or moisture accumulation, wiring for cracked or split insulation, and loose or corroded terminations;

(j) Stationary cranes for manufacturer's recommended grounding of structure and power supply. Rail traveling cranes for grounding of each rail and the power supply per the manufacturer's recommendations;

(k) Runway rail and clamps. Inspect for loose, broken or missing clamps;

(l) Hooks and safety latches for deformation, cracks, excessive wear, or damage such as from chemicals or heat;

(m) Wedges and supports of climbing cranes for looseness or dislocation;

(n) Braces or guys supporting cranes' masts (towers) and anchor bolt base connections for looseness;

(o) Crane structure (including the boom, jib and counter jib):

(i) Structural members: Deformed, cracked, or significantly corroded.

(ii) Bolts, rivets and other fasteners: Loose, failed or significantly corroded.

(iii) Welds for cracks.

(p) Cracked or worn sheaves and drums;

(q) Worn, cracked, or distorted parts such as pins, bearings, shafts, gears, rollers, locking and clamping devices, sprockets, and drive chains or belts;

(r) Excessive wear on brake and clutch system parts, linings, pawls, and ratchets;

(s) Load, wind, and other indicators for inaccuracies outside the tolerances recommended by the manufacturer;

(t) Travel mechanisms for malfunction, excessive wear or damage;

(u) A legible and applicable operator's manual and load chart is in the operator's cab;

(v) Crane cleanliness and housekeeping. Inspect for trash, oil, grease, debris or excessive dirt on crane components and catwalks, if applicable;

(w) A portable fire extinguisher, with a basic minimum extinguishing rating of 10 BC must be installed in the cab or at the machinery housing;

(x) When applicable, tower tie-in collars, struts, and connections to building structure are structurally sound, free of cracks, distortion, excessive wear or corrosion. Pins and structural bolts are tight and installed per the manufacturer's specification;

(y) Ballast blocks in place and secured per manufacturer's recommendations;

(z) For cranes that telescope, the raising mechanism operates within the manufacturer's specifications;

(aa) For cranes that top climb, the climbing frame operates within the manufacturer's specifications;

(bb) A means to prevent traveling tower cranes running into stops while under power;

(cc) A functional audible warning alarm that automatically sounds whenever the traveling tower crane travels;

(dd) Wire rope reeving for compliance with the manufacturer's specifications;

(ee) Wire rope, in accordance with WAC 296-155-53200(5);

(ff) Safety devices and operational aids for proper operation (including significant inaccuracies);

(gg) Legible warning labels and decals as required by the manufacturer;

(hh) Steps, ladders, handrails and guards are in safe and usable condition.

(6) **Additional requirements for tower cranes prior to performing a proof load test.**

> *Note: General requirements relating to preproof load tests for all cranes are located in WAC 296-155-53200.*

(a) When tower cranes are erected, and before placing in service, all functional motions, motion limiting, load limiting devices, locking and safety devices, brakes and clutches must be tested for operation and be within the manufacturer's specification prior to placing the crane in operation.

(b) Proof load tests require the use of certified weights, or scaled weights using a certified scale with a current certificate of calibration.

(c) Functional motion test must be at crane manufacturer's rated load. Each test must include:

(i) Load hoisting and lowering;

(ii) Jib (boom) hoisting and lowering, or trolley travel;

(iii) Slewing motion;

(iv) Travel motion when rail mounted;

(v) Brakes and clutches; and

(vi) Limit, locking, and safety devices.

> *Note: Functional motion tests made after climbing or telescoping may be performed without load.*

(d) The functional motion test listed in (c) of this subsection must continue until all controls, drives, and braking systems have been engaged and have functioned per the crane manufacturer's specifications.

(e) Order in which tests of tower cranes are to be performed is as follows:

(i) Functional motion test without rated load;

(ii) Functional motion test at crane manufacturer's rated load. For other than traveling cranes, these tests may be combined with test of base structural support or foundation system given in (c) of this subsection;

(iii) Test of base structural support or foundation under (f) of this subsection.

(f) During functional motion tests, the crane's base structural support or foundation system must be visually checked by the accredited crane certifier. If any part of the crane's base structural support or foundation system shows excessive visual displacement, visual distress, or audible distress, then the lifted load must be lowered at hoist creep speed and all crane operations are to cease. An evaluation must then be made by the accredited crane certifier.

(II) **Proof load testing of tower cranes**. Setting hoist load limits for tower cranes.

(a) Annual proof load testing. After the crane has passed the visual and operational tests, the accredited crane certifier must ensure a proof load test is conducted and must be performed according to the manufacturer's recommendations. This test must be documented on the form or in the format approved by the department. A copy of this completed form and inspection worksheets must be sent to the department within 10 working days upon completion of the examination.

(b) Tower crane hoist load limit switches must be set in accordance with the manufacturer's specifications using specified certified weights. Procedure is to be verified by the accredited crane certifier. In the absence of the manufacturer's specifications, hoist load limit switches must be verified by means of a static test using test loads of 102 1/2% to 110% of the applicable ratings. Test loads are to be lifted at creep speed until just clear of the ground.

(c) Setting of hoist load limits must be documented on the form provided by the department. A copy of the completed form and inspection worksheets must be sent to the department within 10 days upon completion of the examination.

(d) After erection of fixed freestanding tower cranes, the base structural support or foundation system on which the crane is supported must be tested before placing the crane in service. The test must be conducted with the crane manufacturer's rated load placed at maximum radius permitted by site conditions. When the base structural support or foundation is symmetrical, the crane's jib (boom) must be rotated through 90 degrees with 10 minute stops at the starting position and at each 45 degree position. When the support is asymmetrical, the crane's jib (boom) must be rotated through 360 degrees with 10 minute stops at the starting position and at each 45 degree position.

(e) After erection of rail traveling tower cranes, the base structural support or foundation system to which the rail is attached must be tested before placing the crane in service. The test must be conducted with the crane manufacturer's rated load placed at maximum radius permitted by site conditions. The jib (boom) must be located over the bogie. The crane must travel the entire length of runway, returning with the same load over the bogie on the opposite rail.

[Statutory Authority: RCW 49.17.010, .040, .050, and .060. 16-09-085 (Order 15-08), § 296-155-53206, filed 04/19/16, effective, 05/20/16. Statutory Authority: RCW 47.17.010, 49.17.040, 49.17.050, 49.17.440 and 49.17.060. 12-01-086 (Order 08-32), § 296-155-53206, filed 12/20/11, effective 02/01/12. Statutory Authority: RCW 49.17.010, .040, .050, and .060. 10-14-100 (Order 10-11), § 296-155-53206, filed 07/06/10, effective 09/01/10. Statutory Authority: RCW 49.17.010, .040, .050, and .060. 08-22-080 (Order 07-28), § 296-155-53206, filed 11/04/08, effective 01/01/10.]

WAC 296-155-53208 Additional inspection criteria and proof load testing--Self-erecting tower cranes.

(1) After it is determined that the crane configurations meet the criteria in WAC 296-155-53200, the accredited crane certifier must visually inspect the following items, if applicable, on cranes for sound physical condition and that they are functional within the manufacturer's recommendations (not including removal of inspection covers):

(a) For cranes that telescope the internal tower by a climbing frame, the climbing mechanism is structurally sound; is free of cracks, distortion, excessive wear or corrosion; operates within the manufacturer's specifications;

(b) Structural bolts are tightened;

(c) All control and drive mechanisms for interfering with proper operation and for excessive wear or contamination by lubricants or other foreign matter;

(d) Motion limiting devices for proper operation with the crane unloaded; each motion should be inched into its limiting device by carefully running at slow speed;

(e) Load limiting devices for proper operation and accuracy of settings;

(f) Air, hydraulic, and other pressurized lines for deterioration or leakage, particularly those which flex in normal operation;

(g) Hydraulic system for proper fluid level;

(h) Hydraulic, pneumatic and other pressurized hoses, fittings and tubing, as follows:

  (i) Flexible hose or its junction with the fittings for indications of leaks.

  (ii) Threaded or clamped joints for leaks.

  (iii) Outer covering of the hose for blistering, abnormal deformation or other signs of failure/impending failure.

  (iv) Outer surface of a hose, rigid tube, or fitting for indications of excessive abrasion or scrubbing;

(i) Hydraulic and pneumatic pumps and motors, as follows:

  (i) Performance indicators: Unusual noises or vibration, low operating speed.

  (ii) Loose bolts or fasteners.

  (iii) Shaft seals and joints between pump sections for leaks;

(j) Hydraulic and pneumatic cylinders, as follows:

  (i) Drifting.

  (ii) Rod seals and welded joints for leaks.

  (iii) Cylinder rods for scores, nicks and dents.

  (iv) Case (barrel) for significant dents;

(k) Electrical components for malfunctioning, signs of apparent excessive deterioration, dirt or moisture accumulation, wiring for cracked or split insulation, and loose or corroded terminations;

(l) Ensure crane is grounded per manufacturer's specifications;

(m) Hooks and safety latches for deformation, cracks, excessive wear, or damage such as from chemicals or heat;

(n) Crane structure (including the boom, jib and counter jib):

(i) Structural members: Deformed, cracked, or significantly corroded.

(ii) Bolts, rivets and other fasteners: Loose, failed or significantly corroded.

(iii) Welds for cracks;

(o) Cracked or worn sheaves and drums;

(p) Worn, cracked, or distorted parts such as pins, bearings, shafts, gears, rollers, locking and clamping devices, sprockets, and drive chains or belts;

(q) Excessive wear on brake and clutch system parts, linings, pawls, and ratchets;

(r) Load, wind, and other indicators for inaccuracies outside the tolerances recommended by the manufacturer;

(s) A legible and applicable operator's manual and load chart is in the operator's station;

(t) Crane cleanliness and housekeeping. Inspect for trash, oil, grease, debris or excessive dirt on crane components and catwalks, if applicable;

(u) A portable fire extinguisher, with a basic minimum extinguishing rating of 10 BC must be installed in the cab or at the machinery housing;

(v) Ballast blocks in place and secured per manufacturer's recommendations;

(w) Wire rope reeving for compliance with the manufacturer's specifications;

(x) Wire rope, in accordance with WAC 296-155-53200(5);

(y) Safety devices and operational aids for proper operation (including significant inaccuracies);

(z) Legible warning labels and decals as required by the manufacturer;

(aa) Steps, ladders, handrails and guards are in safe and usable condition.

(2) Additional requirements for self-erecting tower cranes prior to performing a proof load test.

Note: General requirements relating to preproof load tests for all cranes are located in WAC 296-155-53200.

(a) Functional motion test must be at crane manufacturer's rated load. Each test must include:

(i) Load hoisting and lowering;

(ii) Jib (boom) hoisting and lowering, or trolley travel;

(iii) Slewing motion;

(iv) Brakes and clutches;

(v) Limit, locking, and safety devices.

(b) The functional motion test listed in (a) of this subsection must continue until all controls, drives, and braking systems have been engaged and have functioned per the crane manufacturer's specifications.

(c) Order in which tests of self-erecting tower cranes are to be performed is as follows:

(i) Functional motion test without rated load;

(ii) Functional motion test at crane manufacturer's rated load. These tests may be combined with test of base structural support or foundation system given in (a) of this subsection.

(d) During functional motion tests, the crane's base structural support or foundation system must be visually checked by the accredited crane certifier. If any part of the crane's base structural support or foundation system shows excessive visual displacement, visual distress, or audible distress, then the lifted load must be lowered at hoist creep speed and all crane operations are to cease. An evaluation must then be made by the accredited crane certifier.

(3) **Annual proof load testing of self-erecting tower cranes.**

(a) Annual proof load testing. After the crane has passed the visual and operational tests, the accredited crane certifier must ensure a proof load test is conducted and must be performed according to the manufacturer's recommendations. This test must be documented on the form or in the format approved by the department. A copy of this completed form and inspection worksheets must be sent to the department within 10 working days upon completion of the examination.

(b) The structural support or foundation examination during proof load test:

(i) This test must be conducted with the rated load placed at maximum radius permitted by site conditions. The superstructure must be rotated through 360 degrees with 5-minute stops at each outrigger position. If any part of the support structure becomes displaced or distressed, all crane operations must stop until an evaluation is made by a qualified person.

(ii) For rail-mounted cranes, a load test must be conducted with the jib in the position causing maximum loading on one wheel or bogie. The test must comprise traveling the entire length of the runway, then returning with the same load on the other rail. If a sleeper or support becomes displaced or damaged, crane operations must stop until an evaluation is made by a qualified person or until track ballast has been reset, or repairs made and a satisfactory test performed.

(c) Self-erecting tower crane hoist load limit switches must be set in accordance with the manufacturer's specifications using specified certified weights. Procedure is to be verified by the accredited crane certifier.

(d) Setting of hoist load limits must be documented on the form provided by the department. A copy of the completed form and inspection worksheets must be sent to the department within ten days upon completion of the examination.

[Statutory Authority: RCW 49.17.010, .040, .050, and .060. 16-09-085 (Order 15-08), § 296-155-53208, filed 04/19/16, effective, 05/20/16. Statutory Authority: RCW 49.17.010, .040, .050, and .060. 08-22-080 (Order 07-28), § 296-155-53208, filed 11/04/08, effective 01/01/10.]

WAC 296-155-53210 Additional inspection criteria and proof load testing--Overhead/bridge and gantry bridge cranes.

(1) After it is determined that the crane configurations meet the criteria in WAC 296-155-53200, the accredited crane certifier must visually inspect, without disassembly, and if applicable, the following items on overhead and bridge cranes for sound physical condition and that they are functional within the manufacturer's recommendations (not including removal of inspection covers):

(a) Controllers. Control mechanisms for interfering with proper operation. Control and drive mechanisms for apparent excessive wear of components and contamination by lubricants, water or other foreign matter;

(b) Load hooks. Inspect for damage wear to hook nuts, safety latch and hook swivel. Check for deformation, cracks, excessive wear, or damage such as from chemicals or heat. Inspect blocks for wear to sheaves, check plates, and pins. Check for loose pins, bolts and guards;

(c) Sheaves and bearings. Check all sheaves and bearings for lubrication and excessive wear. Ensure sheaves turn freely. Check sheave pin locking device;

(d) Structural supports. Inspect for damage or bent girders, girder seat top plate, diaphragms and structural column connections. Check for loose bolts or rivets, and cracks;

(e) Bridge inspection.

(i) Check complete structure for broken, cracked, damaged, missing, or corroded parts and members.

(ii) Handrails, walkways, and ladders. Inspect for loose, missing, bent, deteriorated or misaligned members, loose bolts, rivets, broken welds and hangers;

(f) Brackets. Check for cracked or corroded welds, missing or loose bolts, bent or cracked brackets;

(g) End stops. Inspect for damaged wheels, broken welds, loose or missing bolts, damaged bumpers, missing pins or damaged plates;

(h) Runway rail and clamps. Inspect for loose, broken or missing clamps. Check the condition of railhead and side wear, rail splice plates and/or welds, rail gaps and associated bolts, wedges, connectors and rail switches;

(i) Crane alignment. Inspect for proper bridge end float while crane travels in both directions on runway. Check all corner connections for rust, shear marks, loose or missing bolts, nuts and washers. Inspect square marks and legibility of dimension;

(j) Wheels and bearings. Inspect wheels for wear, flat spots, chips, flange wear, cracks, loose axle pins, or securing devices. Check bearing clearance, chatter, loose bearing caps and lubrication;

(k) Trolley. Check for loose, missing, broken or bent members. Inspect for loose, faulty or missing coupling guards. Check for broken, loose or missing axle pins. Inspect for axle pins displaying excessive wear;

(l) Trolley rail. Inspect for bent or damaged members, loose bolts, rivets, guards, trolley rail clamps, end stops and broken welds. Check condition of rail head and side wear, rail splice plates and/or welds and rail gaps;

(m) Trolley conductors. Inspect insulators and clamps, loose connectors, bent, pitted or damaged wires or collectors;

(n) Shafts, couplings, and bearings. Inspect shafts for vibration, cuts and nicks, loose or worn keyways and misalignment. Check coupling for wear, loose bolts or keys and misalignment. Inspect bearing for clearance, chatter, loose bearing caps and proper lubrication;

(o) Gearing. Inspect gears for worn teeth, cracked teeth, superficial root cracks, pitting, unusual indentation or wear marks, full contact or end loading, loose set screws and keys. Check guards and covers. Inspect gear cases for excessive noise and vibration, proper lubrication and leaking;

(p) Wire rope and drum. Inspect wire rope for damage. Check rope clip fittings and associated mounting hardware for wear and damage. Inspect drum grooves for excessive wear. Inspect drum pedestal and bearing condition. Check for cracks in drum;

(q) Electrical items. Check all contacts for proper alignment and evidence of excess heating or unusual arcing. Inspect all coils, contact leads, shunts and wires, fuses or overload devices for loose connections and evidence of overheating. Inspect panel board and arc shields for cracks, loose bolts, dirt and moisture. Check panel marking for legibility. Inspect speed control resistors for damaged insulation, cracked or broken grids, loose connections, bolts and brackets;

(r) Motor. Inspect for damage, bearing noise, vibration and lubrication, spark and cleanliness of commutator and brush wear, loose hold down bolts and motor brackets. Inspect commutator or slip rings for evidence of overheating and brush sparking. Inspect motor leads and insulators, damaged or deteriorated insulation and loose connections. Inspect brush holder for proper clearance to commutator or slip rings, and freedom of brushes;

(s) Brakes. Inspect for wear in linkage, pins and cams, weakness of springs, wear and condition of lining, smoothness of the drum, heat check crack and clearance between drum or disk. Inspect for improper solenoid air gap; evidence of overheating; damaged brass, and loose core laminations; delay or restriction in opening of brakes;

(t) Hoist brakes. Inspect for wear in linkage, pins and cams, weakness of springs, wear and condition of lining, smoothness of drum, heat check cracks and clearance between drum or disk. Inspect for improper solenoid air gap; evidence of overheating; damaged brass, and loose core laminations; delay or restriction in opening of brakes;

(u) Limit switches. Remove covers and inspect all electrical and mechanical components for malfunction including contacts, springs, ratchets, pins, arm and insulators, rollers, cams and dogs. Inspect cover gaskets, counterweight guides. Check all securing bolts and guards. Check for weather or moisture damage. Check for proper operation;

(v) Crane cleanliness and housekeeping. Inspect for trash, oil, grease, debris or excessive dirt on crane components and catwalks, if applicable;

(w) Operation of crane controls. Operate all crane controls and check for proper operation. Check for smooth and regular motions without abnormal sensations, hesitations, binding, vibrations, shimmy, or irregularity;

(x) Warning device/fire protection. Inspect for proper operation of sirens, horns, bells and lights. Check switches and inspect wiring and connections;

(y) A legible and applicable operator's manual and load chart is in the operator's cab or station;

(z) A portable fire extinguisher, with a basic minimum extinguishing rating of ten BC must be installed in the cab or at the machinery housing.

(2) **Annual proof load testing of bridge/overhead cranes.**

(a) Annual proof load testing. After the crane has passed the visual and operational tests, the accredited crane certifier must ensure a proof load test is conducted and must be performed according to the manufacturer's recommendations or a registered professional structural engineer (RPSE). This test must be documented on the form or in the format approved by the department. A copy of this completed form and inspection worksheets must be sent to the department within 10 working days upon completion of the examination.

(b) The proof load test must be at least 100% but not to exceed 125% of the rated capacity.

(c) This test must be documented on the form or in the format approved by the department. A copy of this completed form and inspection worksheets must be sent to the department within 10 working days upon completion of the examination.

(d) Hoist the test load a distance to assure that the load is supported by the crane and held by the hoist brake(s).

(e) Transport the test load by means of the trolley for the full length of the bridge, as practical.

(f) Transport the test load by means of the bridge for the full length of the runway in one direction with the trolley as close to the extreme right-hand end of the crane as practical, and in the other direction with the trolley as close to the left-hand end of the crane as practical.

(g) Lower the test load, and stop and hold the test load with the brake(s).

(h) Mechanical load brake tests. Hoist test load and hold for 5 minutes.

Release the holding brake, either mechanically or electrically to verify mechanical load brake function or hoist the rated load then lower, monitoring the hoist for any speed control issues.

[Statutory Authority: RCW 49.17.010, .040, .050, and .060. 16-09-085 (Order 15-08), § 296-155-53210, filed 04/19/16, effective, 05/20/16. Statutory Authority: RCWs 47.17.010, 49.17.040, 49.17.050, 49.17.440 and 49.17.060. 12-01-086 (Order 08-32), § 296-155-53210, filed 12/20/11, effective 02/01/12. Statutory Authority: RCW 49.17.010, .040, .050, and .060. 08-22-080 (Order 07-28), § 296-155-53210, filed 11/04/08, effective 01/01/10.]

WAC 296-155-53212 Additional inspection criteria and proof load testing--Derricks.

(1) After it is determined that the derrick configurations meet the criteria in WAC 296-155-53200, the accredited derrick certifier must visually inspect the following items, if applicable, on derricks for sound physical condition and that they are functional within the manufacturer's recommendations (not including removal of inspection covers):

(a) All control and drive mechanisms for adjustments interfering with proper operation and for excessive wear or contamination by lubricants or other foreign matter;

(b) All chords and lacing, tension in guys, plumb of the mast, external indication of deterioration or leakage in air or hydraulic systems;

(c) Derrick hooks for deformation or cracks, distortion causing an increase in throat opening of 5% not to exceed 1/4 inch or as recommended by the manufacturer. Any wear exceeding 10% percent (or as recommended by the manufacturer) of the original section dimension of the hook;

(d) Rope reeving for noncompliance with derrick manufacturer's specifications;

(e) Hoist brakes, clutches, and operating levers;

(f) Electrical apparatus for malfunctioning, signs of excessive deterioration, dirt and moisture accumulation;

(g) Structural members for deformation, cracks, and corrosion;

(h) Crane cleanliness and housekeeping. Inspect for trash, oil, grease, debris or excessive dirt on crane components and catwalks, if applicable;

(i) Bolts and rivets for tightness;

(j) Parts such as pins, bearings, shafts, gears, sheaves, drums, rollers, locking and clamping devices, for wear, cracks, and distortion;

(k) Gudgeon pin for cracks, wear and distortion;

(l) Foundation or supports for continued ability to sustain the imposed loads;

(m) A legible and applicable operator's manual and load chart is in the operator's cab or station;

(n) A portable fire extinguisher, with a basic minimum extinguishing rating of 10 BC must be installed in the cab or at the machinery housing.

(2) **Annual proof load testing of derricks.**

(a) Annual proof load testing. After the derrick has passed the visual and operational tests, the accredited derrick certifier must ensure a proof load test is conducted and must be performed at the maximum and minimum boom angles or radii or as close to these as practical and at such intermediate radii as the derrick manufacturer or RPSE may deem necessary. This test must be documented on the form or in the format approved by the department. A copy of this completed form and inspection worksheets must be sent to the department within 10 working days upon completion of the examination.

(b) Proof load tests and safe working load ratings must be based on the designed load ratings at the ranges of boom angle or operating radii. Proof loads must be as per the manufacturer's recommendations. When the manufacturer recommendations are not available follow the requirements in Table 2 below:

Table 2 Derrick Load Test	
Safe Working Load SWL	**Proof Load**
Up to 20 tons	25% in excess
20-50 tons	5 tons in excess
Over 50 tons	10% in excess

(c) Hoist the test load a few inches and hold to verify that the load is supported by the derrick and held by the hoist brake(s).

(d) Swing the derrick, if applicable, the full range of its swing, at the maximum allowable working radius for the test load.

(e) Boom the derrick up and down within the allowable working radius for the test load.

(f) Lower the test load, stop and hold the load with the brake(s).

(g) After satisfactory completion of a proof load test, the derrick and all component parts thereof must be carefully examined in all applicable requirements in this section.

(h) This test must be documented on the form or in the format approved by the department. A copy of this completed form and inspection worksheets must be sent to the department within 10 working days upon completion of the examination.

[Statutory Authority: RCW 49.17.010, .040, .050, and .060. 16-09-085 (Order 15-08), § 296-155-53212, filed 04/19/16, effective, 05/20/16. Statutory Authority: RCWs 47.17.010, 49.17.040, 49.17.050, 49.17.440 and 49.17.060. 12-01-086 (Order 08-32), § 296-155-53212, filed 12/20/11, effective 02/01/12. Statutory Authority: RCW 49.17.010, .040, .050, and .060. 08-22-080 (Order 07-28), § 296-155-53212, filed 11/04/08, effective 01/01/10.]

WAC 296-155-53214 Crane decertification and reinstatement.

(1) If any of the following occur, the certification becomes invalid and must be inspected by an accredited crane certifier:

(a) Contact with an energized power line;

(b) Any overload, other than proof load testing, or one that has been approved in writing in advance by the crane manufacturer or a RPE;

(c) Any significant modifications or significant repairs of a load sustaining/bearing part that affects the safe operation of the crane/derrick.

(d) Any deficiency that affects the safe operation of the crane or derrick that has been identified by a qualified person or through an inspection by the department of labor and industries.

Note: Replacement of hoisting rope does not constitute decertification.

(2) The owner or lessee must notify the crane certification section by phone, (360) 902-4943 or fax (360) 902-5438, or e-mail at lnicranes@lni.WA.gov within 24 hours if any of the above occurs.

(3) The certification may be reinstated only after affected components have been reinspected by an accredited crane certifier. If the accredited crane certifier identifies any deficiencies during the reinspection, the deficiencies must be corrected before the certification can be reinstated. If the accredited crane certifier believes proof load testing should be conducted prior to reinstatement of the certification, proof load testing must be conducted. In the case of major modifications or repairs to important load sustaining/bearing parts, proof load testing must be performed prior to reinstatement. The accredited crane certifier must notify the department that the certification has been reinstated.

[Statutory Authority: RCW 49.17.010, .040, .050, and .060. 16-09-085 (Order 15-08), § 296-155-53214, filed 04/19/16, effective, 05/20/16. Statutory Authority: RCW 49.17.010, .040, .050, and .060. 08-22-080 (Order 07-28), § 296-155-53214, filed 11/04/08, effective 01/01/10.]

WAC 296-155-533 Qualifications and certification.

[Statutory Authority: RCW 49.17.010, .040, .050, and .060. 08-22-080 (Order 07-28), § 296-155-533, filed 11/04/08, effective 01/01/10.]

WAC 296-155-53300 Operator qualifications and certification.

(1) Prior to operating any crane covered under chapter 296-155 WAC, Part L, with the exception of the trainee/apprentice requirements outlined in subsection (2) of this section and those cranes exempt in WAC 296-155-52900(3), you must ensure that the operator meets the following requirements:

(a) Has a valid crane operator certificate, for the type of crane to be operated, issued by a crane operator testing organization which has an accredited program, accredited by a nationally recognized accrediting agency. The operator certification must include a successful passing of a written and practical examination for each crane category listed in Table 3 and by crane type for mobile cranes.

(b) A determination through a written test that:

(i) The individual knows the information necessary for safe operation of the specific type of crane/derrick the individual will operate, including all of the following:

(A) The controls and operational/performance characteristics.

(B) Use of, and the ability to calculate, load/capacity information on a variety of configurations of the crane/derrick.

(C) Procedures for preventing and responding to power line contact.

(D) Technical knowledge similar to the subject matter criteria listed in WAC 296-155-56420 of this part applicable to the specific type of crane/derrick the individual will operate. Use of WAC 296-155-56420 criteria meets the requirements of this provision.

(E) Technical knowledge applicable to:

(I) The suitability of the supporting ground and surface to handle expected loads.

(II) Site hazards.

(III) Site access.

(F) This part, including applicable incorporated materials.

(ii) The individual is able to read and locate relevant information in the equipment manual and other materials containing information referred to in (i) of this subsection.

(c) A determination through a practical test that the individual has the skills necessary for safe operation of the crane/derrick, including the following:

(i) Ability to recognize, from visual and auditory observation, the items listed in WAC 296-155-53405(2).

(ii) Operational and maneuvering skills.

(iii) Application of load chart information.

(iv) Application of safe shut-down and securing procedures.

Notes:

- *An operator's certificate issued by the accredited testing agency is valid for a 5-year period, and must be renewed to ensure operators maintain qualified operator status.*
- *For self-erecting tower cranes, the department will accept a tower crane certification issued by a nationally accrediting testing agency.*
- *For derricks, the department will accept, at a minimum, a lattice boom truck or crawler mobile crane operator's certificate.*
- *An operator will be deemed qualified to operate a crane if the operator is certified under (a) of this subsection for the type and capacity of the crane or for higher-capacity crane of the same type.*

(d) If there is no accredited written or practical test for operator certification available, you must ensure the operator has been completely trained, evaluated and tested by you on the operating procedures for the piece of equipment in use as recommended by the crane/ equipment manufacturer and the applicable ASME standard. This process must be documented and made available upon request.

(e) Has crane hours of experience as shown in Table 3; and

(f) Pass a substance abuse test conducted by a recognized laboratory.

EXEMPTION:

When it is necessary in the performance of their duties, manufacture representatives, factory representatives and maintenance personnel are not required to be certified crane operators.

Table 3 Crane Operator Experience for Cranes Used in the Construction Industry		
The 5 Categories of Cranes and their Types	**Number of Hours of Actual Crane Operating Experience**	**Number of Hours of Crane Related Experience**
(1) Mobile Cranes		
(a) Lattice Boom Crawler Cranes (LBC)	300 tons and above 1000 Hours	300 tons and above 1000 Hours
	Under 300 tons 500 Hours	Under 300 tons 500 Hours
(b) Lattice Boom Truck Cranes (LBT)	300 tons and above 1000 Hours	300 tons and above 1000 Hours
	Under 300 tons 500 Hours	Under 300 tons 500 Hours
(c) Large Telescopic Boom Cranes (Swing Cab) (TLL) (including digger derricks)	Over 130 tons 750 Hours	Over 130 tons 750 Hours
	Over 40 tons to 130 tons 250 Hours	Over 40 tons to 130 tons 250 Hours
	40 tons and under 40 Hours	40 tons and under 40 Hours
(d) Small Telescopic Boom Cranes (Fixed Cab) (TSS) (including digger derricks)	15 tons and above 40 Hours	15 tons and above 40 Hours
	Over 5 tons and under 15 tons 20 Hours	Over 5 tons and under 15 tons 20 Hours
	5 tons and under 8 hours	5 tons and under 16 hours

Table 3 Crane Operator Experience for Cranes Used in the Construction Industry (Continued)		
The 5 Categories of Cranes and their Types	**Number of Hours of Actual Crane Operating Experience**	**Number of Hours of Crane Related Experience**
(2) Articulating Boom Cranes	20 Hours	20 Hours
(3) Tower Cranes		
(a) Hammerhead	500 Hours	500 Hours
(b) Luffer	500 Hours	500 Hours
(c) Self-Erecting	50 Hours	50 Hours
(4) **Overhead/Bridge and Gantry Cranes**		
(a) Cab Operated	40 Hours	40 Hours
(b)Pendant/Remote	40 Hours	40 Hours
(5) **Derricks** (not including digger derricks)	20 Hours	500 Hours
Hours of actual crane operating experience. For all cranes: Time while the operator is at the controls of the crane; and/or has direct control of that crane; and/or a combination of operating hours within the same crane type. For mobile cranes: It also includes time while installing/removing boom sections, luffing boom, jib, extending and retracting outriggers/stabilizers, leveling crane, and replacing hoisting rope. For tower cranes: It includes time while jumping (increasing the height of the tower/mast). *Note: Additional actual crane operator experience may account for crane related experience.*		
Hours of crane related experience: Time as a signalperson/bellman, oiler, crane mechanic, crane inspector, formal classroom training, crane simulator operation, and a combination of operating hours on other categories of cranes.		

Note: Cranes and other lifting machines covered under this part that are exempt can be found in WAC 296-155-52900(3).

(2) **Prequalification/certification training period**. An employee who is not a qualified crane operator as outlined in subsection (1) of this section is permitted to operate the crane as part of his/her training providing the following requirements are met:

(a) The employee ("trainee/apprentice") must be provided with sufficient training prior to operating the crane to enable the trainee to operate the crane safely under limitations established by this section (including continuous supervision) and any additional limitations established by the employer.

(b) The tasks performed by the trainee/apprentice while operating the crane must be within the trainee's ability, as determined by the supervising qualified crane operator.

(c) Qualified crane/derrick operator. While operating the crane/derrick , the trainee/apprentice must be continuously supervised by a qualified crane/derrick operator who meets the following requirements:

(i) The qualified crane/derrick operator is an employee or agent of the trainee's/apprentice's employer.

(ii) The qualified crane/derrick operator under this section is familiar with the proper use of the crane's/derrick's controls.

(iii) While supervising the trainee/apprentice, the qualified crane/derrick operator performs no tasks that detract from the qualified crane/derrick operator's ability to supervise the trainee/apprentice.

(iv) For cranes other than tower cranes: The qualified crane/derrick operator and the trainee/apprentice must be in direct line of sight of each other. In addition, they must communicate verbally or by hand signal.

(v) For tower cranes: The qualified crane operator and the trainee/apprentice must be in direct communication with each other.

(d) The trainee/apprentice must not operate the crane in any of the following circumstances:

(i) If any part of the crane, load line or load (including rigging and lifting accessories), if operated up to the crane's maximum working radius in the work zone, could get within 20 feet of a power line that is up to 350 kV, or within 50 feet of a power line that is over 350 kV;

(ii) If the crane is used to hoist personnel;

(iii) In a multiple-crane or multiple load line lift situations; or

(iv) Multiple-lift rigging, as defined in WAC 296-155-52902, can only be accomplished by the trainee/apprentice when the qualified crane operator determines that the trainee's/apprentice's skills are sufficient for this high-skill work.

(v) Critical lifts, as defined in WAC 296-155-52902, can only be accomplished by the trainee/apprentice when the qualified crane operator determines that the trainee's/apprentice's skills are sufficient for this high-skill work.

(3) You must obtain documentation showing hours of crane operator experience and crane related experience separated out by crane type and capacity.

> *Note: You may accept a signed declaration from the crane operator attesting to actual hours of crane operator experience and crane related experience separated out by crane type and capacity. For sample declaration form see WAC 296-155-56425.*

(4) The department may recognize crane operator certification from another state or territory of the United States as equivalent to qualified crane operator requirements if the department determines that the other jurisdiction's credentialing standards are substantially similar to the qualified crane operator requirements.

(5) Crane operator experience and crane related experience must be documented and separated out by crane type and capacity; this documentation need only show the minimum amount of hours as outlined in Table 3 above. If you are documenting crane operating and/or related crane experience hours, you must provide a copy of the hours to the operator as soon as practical, if requested.

[Statutory Authority: RCW 49.17.010, .040, .050, and .060. 16-09-085 (Order 15-08), § 296-155-53300, filed 04/19/16, effective, 05/20/16. Statutory Authority: RCW 49.17.010, .004, .050, and .060. 13-02-068 (Order 12-14), § 296-155-53300, filed 12/31/12, effective 02/01/13. Statutory Authority: RCWs 47.17.010, 49.17.040, 49.17.050, 49.17.440 and 49.17.060. 12-01-086 (Order 08-32), § 296-155-53300, filed 12/20/11, effective 02/01/12. Statutory Authority: RCW 49.17.010, .040, .050, and .060. 10-14-100 (Order 10-11), § 296-155-53300, filed 07/06/10, effective 09/01/10. Statutory Authority: RCW 49.17.010, .040, .050, and .060. 08-22-080 (Order 07-28), § 296-155-53300, filed 11/04/08, effective 01/01/10.]

WAC 296-155-53302 Signal person qualifications.

(1) The signal person must meet the qualification requirements (subsection (3) of this section) prior to giving any signals to a crane/derrick operator. This requirement must be met by using either Option (1) or Option (2).

(a) Option (1) - Third-party qualified evaluator. The signal person has documentation from a third-party qualified evaluator showing that the signal person meets the qualification requirements listed in subsection (3) of this section.

(b) Option (2) - Employer's qualified evaluator. You have your qualified evaluator assess the individual and determine that the individual meets the qualification requirements listed in subsection (3) of this section and provides documentation of that determination. An assessment by an employer's qualified evaluator under this option is not portable meaning other employers are not permitted to use this qualification to meet the requirements of this section.

(c) You must make the documentation for whichever option is used available at the site while the signal person is employed by you. The documentation must specify each type of signaling (e.g., hand signals, radio signals, etc.) for which the signal person meets the requirements of subsection (3) of this section.

(2) If subsequent actions by the signal person indicate that the individual may not meet the qualification requirements listed in subsection (3) of this section, you must not allow the individual to continue working as a signal person until retraining is provided and a reassessment is made in accordance with subsection (1) of this section that confirms that the individual meets the qualification requirements.

(3) **Qualification requirements**. Each signal person must:

(a) Know and understand the type of signals used. For example, if hand signals are used, the signal person must know and understand the standard method for hand signals.

(b) Be competent in the application of the type of signals used.

(c) Have a basic understanding of crane/derrick operation and limitations, including the crane dynamics involved in swinging and stopping loads and boom deflection from hoisting loads.

(d) Know and understand the relevant requirements of WAC 296-155-53406 and this section.

(e) Demonstrate that they meet the requirements in (a) through (d) of this subsection through an oral or written test, and through a practical test. All tests must be documented.

(4) **Qualification period**. A signal person qualification cannot exceed a 5-year period; this qualification must be renewed every 5 years to ensure signal persons maintain qualified status. At a minimum, this renewal must include a documented written or oral or practical exam.

[Statutory Authority: RCW 49.17.010, .040, .050, and .060. 16-09-085 (Order 15-08), § 296-155-53302, filed 04/19/16, effective, 05/20/16. Statutory Authority: RCWs 47.17.010, 49.17.040, 49.17.050, 49.17.440 and 49.17.060. 12-01-086 (Order 08-32), § 296-155-53302, filed 12/20/11, effective 02/01/12.

WAC 296-155-53304 Repair, Inspection and Maintenance Employee Qualifications.

(1) Repair, inspection, and maintenance personnel are permitted to operate the crane/derrick only where all of the following requirements are met:

(a) The operation is limited to those functions necessary to perform maintenance, inspect or verify the performance of the crane/derrick.

(b) The personnel either:

(i) Operate the crane/derrick under the direct supervision of an operator who meets the requirements of WAC 296-155-53300, Operator qualification and certification; or

(ii) Are familiar with the operation, safe limitations, characteristics and hazards associated with the type of crane/derrick.

(2) Maintenance and repair personnel must meet the definition of a qualified person with respect to the crane/derrick and maintenance/repair tasks performed.

[Statutory Authority: RCWs 47.17.010, 49.17.040, 49.17.050, 49.17.440 and 49.17.060. 12-01-086 (Order 08-32), § 296-155-53304, filed 12/20/11, effective 02/01/12.]

WAC 296-155-53306 Rigger Qualifications.

(1) The rigger must meet the qualification requirements (subsection (3) of this section) prior to performing hoisting activities for assembly and disassembly work (WAC 296-155-53402 (19)(a)). A qualified rigger is required whenever employees are engaged in hooking, unhooking, or guiding the load, or in the initial connection of a load to a component or structure, and are within the fall zone (WAC 296-155-53400 (43)(c)). This requirement must be met by using either Option (1) or Option (2).

(a) Option (1) - Third-party qualified evaluator. The rigger has documentation from a third-party qualified evaluator showing that the rigger meets the qualification requirements listed in subsection (3) of this section.

(b) Option (2) - Employer's qualified evaluator. You have your qualified evaluator assess the individual and determine that the individual meets the qualification requirements listed in subsection (3) of this section and provides documentation of that determination. An assessment by an employer's qualified evaluator under this option is not portable meaning other employers are not permitted to use this qualification to meet the requirements of this section.

(c) You must make the documentation for whichever option is used available at the site while the rigger is employed by the employer. The documentation must specify each type of rigging for which the rigger meets the requirements of subsection (3) of this section.

(2) If subsequent actions by the rigger indicate that the individual may not meet the qualification requirements listed in subsection (3) of this section, you must not allow the individual to continue working as a rigger until retraining is provided and a reassessment is made in accordance with subsection (1) of this section that confirms that the individual meets the qualification requirements.

(3) **Qualification requirements**. Each rigger must:

(a) Know and understand the requirements located in ASME B30.7-2006, Base-Mounted Drum Hoists, B30.9-2010, Slings, B30.10-2009, Hooks, B30.16-2007, Overhead Hoists (Underhung), B30.20-2010, Below-the-Hook Lifting Devices, B30.21-2005, Manually Lever Operated Hoists and B30.26-2004, Rigging Hardware, as applicable.

(b) Know and understand the type of sling and hitch used. For example, if synthetic web slings are used, the rigger must know and understand the removal criteria for this type of sling and how to properly use the sling.

(c) Be competent in the application of the type of hitches used.

(d) Have a basic understanding of slings, rigging hardware and below-the-hook lifting devices (as applicable); their limitations, rigging practices, associated hazards and inspection requirements.

(e) Know and understand load weight estimation, center of gravity, effect of angles on rigging components, load turning, knots/tag lines, chain hoist/come-a-long usage, winch and block usage, and basic hand signals, as applicable.

(f) Know and understand the relevant requirements of WAC 296-155-556 through 296-155-56220 and this section.

(g) Demonstrate that they meet the requirements in (a) through (e) of this subsection through a written test and through a practical test. All tests must be documented.

Notes:

- *The provisions of subsection (3)(g) of this section are not required until February 1, 2013.*
- *This section does not require that each and every worker associated with the rigging of a component or structure to be a "fully qualified rigger" as defined in this section, the requirement is for at least one of the workers to be a fully qualified rigger. However, all other associated workers must be qualified by training or experience to perform their assigned tasks (WAC 296-155-035(2)).*

(4) **Qualification period**. A rigger qualification cannot exceed a 5-year period; this qualification must be renewed every 5 years to ensure riggers maintain qualified status. At a minimum, this renewal must include a documented written exam.

[Statutory Authority: RCW 49.17.010, .040, .050, and .060. 16-09-085 (Order 15-08), § 296-155-53306, filed 04/19/16, effective, 05/20/16. Statutory Authority: RCW 49.17.010, .004, .050, and .060. 13-02-068 (Order 12-14), § 296-155-53306, filed 12/31/12, effective 02/01/13. Statutory Authority: RCWs 47.17.010, 49.17.040, 49.17.050, 49.17.440 and 49.17.060. 12-01-086 (Order 08-32), § 296-155-53306, filed 12/20/11, effective 02/01/12.]

WAC 296-155-534 General Requirements for All Cranes and Derricks.

[Statutory Authority: RCW 47.17.010, 49.17.040, 49.17.050, 49.17.440 and 49.17.060. 12-01-086 (Order 08-32), § 296-155-534, filed 12/20/11, effective 02/01/12.]

WAC 296-155-53400 General Requirements.

(1) All cranes and derricks covered under this part, except for those exempted in WAC 296-155-52900(3), must be certified annually by an accredited certifier recognized by the department, for detailed information about this certification see WAC 296-155-532.

(2) All crane and derrick operators covered under this part, except for those exempted in WAC 296-155-52900(3), must be qualified as required by WAC 296-155-533.

(3) (a) Cranes must meet the requirements for design, construction, installation and testing as prescribed in the applicable ASME standard at the time the crane or derrick was manufactured.

(b) Where manufacturer's specifications are not available the limitations assigned to the crane must be based on the determinations of a registered professional engineer (RPE), competent in this field and such determinations must be appropriately documented and recorded.

(c) Attachments used with cranes must not exceed the capacity, rating, or scope recommended by the manufacturer or RPE.

(4) Unavailable operation procedures.

(a) Where the manufacturer procedures are unavailable, you must develop and ensure compliance with all procedures necessary for the safe operation of the crane/derrick and attachments.

(b) Procedures for the operational controls must be developed by a qualified person.

(c) Procedures related to the capacity of the crane/derrick must be developed and signed by a registered professional engineer familiar with this equipment.

(5) Warning decals and placards must be installed and legible as prescribed by this part and the crane manufacturer.

(6) The procedures applicable to the operation of the crane/derrick including a legible and applicable operator's manual and load rating chart, written in the English language with customary grammar and punctuation, must be in the operator's cab or station when the crane is in operation. Where rated capacities are available in the cab only in electronic form: In the event of a failure which makes the rated capacities inaccessible, the operator must immediately cease operations or follow safe shut-down procedures until the rated capacities (in electronic or other form) are available.

(7) **Rated capacity and related information**. The information available in the operator's cab or station (see WAC 296-155-53400(6)) regarding “rated capacity” and related information must include, at a minimum, the following information:

(a) A complete range of the manufacturer's rated capacities, as follows:

(i) At all manufacturer approved operating radii, boom angles, work areas, boom lengths and configurations, jib lengths and angles (or offset).

(ii) Alternate ratings for use and nonuse of optional equipment which affects rated capacities, such as outriggers, stabilizers, and extra counterweights.

(iii) When available from the manufacturer load ratings where structural competence governs lifting performance must be identified.

(b) A work area chart for which capacities are listed in the load chart.

Note: An example of this type of chart for mobile cranes is in WAC 296-155-56435.

(c) The work area figure and load chart must clearly indicate the areas where no load is to be handled.

(d) Recommended reeving for the hoist lines must be shown.

(e) Recommended parts of hoist reeving, size, and type of wire rope for various crane loads.

(f) Recommended boom hoist reeving diagram, where applicable; size, type, and length of wire rope.

(g) Tire pressure (where applicable).

(h) Caution or warnings relative to limitations on cranes and operating procedures, including an indication of the least stable direction.

(i) Position of the gantry and requirements for intermediate boom suspension (where applicable).

(j) Instructions for boom erection and conditions under which the boom, or boom and jib combinations, may be raised or lowered.

(k) Whether the hoist holding mechanism is automatically or manually controlled, whether free fall is available, or any combination of these.

(l) The maximum telescopic travel length of each boom telescopic section.

(m) Whether sections are telescoped manually or with power.

(n) The sequence and procedure for extending and retracting the telescopic boom section.

(o) Maximum loads permitted during the boom extending operation, and any limiting conditions or cautions.

(p) Hydraulic relief valve settings specified by the manufacturer.

(8) All manufacturer procedures applicable to the operational functions of cranes/derricks, including its use with attachments must be complied with.

(9) The operator must not engage in any practice or activity that diverts his/her attention while actually engaged in operating the crane/derrick, such as the use of cellular phones (other than when used for signal communications).

(10) A portable fire extinguisher, with a basic minimum extinguisher rating of 10 BC, must be installed in the cab or at the machinery housing. Additional requirements relating to portable fire extinguishers can be found in WAC 296-800-300.

(11) **Cabs**. Cranes/derricks with cabs must meet the following requirements:

(a) Cabs must be designed with a form of adjustable ventilation and method for clearing the windshield for maintaining visibility and air circulation. Examples of means for adjustable ventilation include air conditioner or window that can be opened (for ventilation and air circulation); examples of means for maintaining visibility include heater (for preventing windshield icing), defroster, fan, windshield wiper.

(b) Cab doors (swinging, sliding) must be designed to prevent inadvertent opening or closing while traveling or operating the machine. Swinging doors adjacent to the operator must open outward. Sliding operator doors must open rearward.

(c) Windows.

(i) The cab must have windows in front and on both sides of the operator. Forward vertical visibility must be sufficient to give the operator a view of the boom point at all times.

(ii) Windows may have sections designed to be opened or readily removed. Windows with sections designed to be opened must be designed so that they can be secured to prevent inadvertent closure.

(iii) Windows must be of safety glass or material with similar optical and safety properties that introduce no visible distortion or otherwise obscure visibility that interferes with the safe operation of the equipment.

(d) A clear passageway must be provided from the operator's station to an exit door on the operator's side.

(e) Areas of the cab roof that serve as a workstation for rigging, maintenance, or other equipment-related tasks must be capable of supporting 250 pounds without permanent distortion.

(12) Personal belongings must be stored in such a manner as to not interfere with access or operation of the crane.

(13) Rigging gear, tools, oil cans, waste, and other articles must be stored in the toolbox or another appropriate location, and must not be permitted to lie loose in or about the cab or operator's work station.

(14) Operating controls must be properly marked to indicate the function of the controls in each position.

(15) You must designate a competent person who must inspect the cranes and components daily when used, and periodically during use to make sure it is in safe operating condition. Any deficiencies that effect the safe operation of the crane must be repaired, or defective parts replaced, before continued use.

> *Note: For additional requirements relating to inspections see WAC 296-155-53405.*

(16) Before starting the engine, the operator must verify that all controls are in the proper starting position and that all personnel are in the clear.

(17) While in operation, belts, gears, shafts, pulleys, sprockets, spindles, drums, fly wheels, chains, or other reciprocating, rotating, or other moving parts or equipment must be guarded if such parts are exposed to contact by employees, or otherwise create a hazard. Guarding must meet the requirements of chapter 296-806 WAC, Machine safety.

(18) Neither the load nor the boom is allowed to be lowered below the point where less than two full wraps of rope remain on their respective drums.

(19) All exhaust pipes, turbochargers, and charge air coolers must be guarded or insulated in areas where contact by employees is possible in the performance of normal duties and are discharged in a direction away from the operator.

(20) Hydraulic and pneumatic lines must be protected from damage to the extent feasible.

(21) **Friction mechanisms**. Where friction mechanisms (such as brakes and clutches) are used to control the boom hoist or load line hoist, they must be:

(a) Of a size and thermal capacity sufficient to control all rated loads with the minimum recommended reeving.

(b) Adjustable to permit compensation for lining wear to maintain proper operation.

(22) **Hydraulic load hoists**. Hydraulic drums must have an integrally mounted holding device or internal static brake to prevent load hoist movement in the event of hydraulic failure.

(23) Whenever internal combustion engine powered crane/derrick exhausts in enclosed spaces, tests must be made and recorded to see that employees are not exposed to unsafe concentrations of toxic gases or oxygen deficient atmospheres. (See chapter 296-62 WAC, General occupational health standards and chapter 296-841 WAC, Airborne contaminants.)

(24) If access to the cab roof is necessary, a ladder or steps must be provided to give access to a cab roof.

(25) All steps, running boards, and ladders must be of substantial construction and in good repair at all times.

(26) Guardrails, handholds, and steps must be provided on cranes for easy access to the cab in accordance with Parts C-1 and J of this chapter.

(27) **Platforms and walkways must have antiskid surfaces**.

(28) Cranes/derricks fuel tank filler pipe must be located in such a position, or protected in such a manner, as to not allow spill or overflow to run onto the engine, exhaust, or electrical equipment of any crane being fueled. In addition, cranes/derricks must be refueled as follows:

(a) Make sure the engine is turned off before refueling.

(b) When refueling with gasoline using portable containers, make sure only an approved safety-type can with an automatic closing cap and flame arrester is used.

(c) Smoking or open flames is prohibited in the refueling area.

(29) **Crane hook ball assemblies and load blocks**.

(a) Load hooks (including latched and unlatched types), ball assemblies, and load blocks must be of sufficient weight to overhaul the line from the highest hook position for boom or boom and jib lengths and the number of parts of the line in use.

(b) Crane hooks must be equipped with latches or self-locking devices unless a qualified person determines that it is safer to hoist and place the load without latches (or with the latches removed/tied back or otherwise disabled) and routes for the loads are preplanned to ensure that no employee is required to work in the fall zone except for employees necessary for the hooking or unhooking of the load.

(c) The latch or self-locking device when used must bridge the throat opening of the hook for the purpose of retaining slings or other lifting devices under slack conditions.

(30) **Repair or replace a hook when it shows**:

(a) Any cracks, nicks, or gouges.

(b) Wear of more than 10% of the original sectional dimension, or as recommended by the manufacturer.

(c) Any visibly apparent bend or twist from the plane of the unbent hook.

(d) Any distortion causing an increase in the throat opening of 5%, not to exceed 1/4 inch or as recommended by the manufacturer.

(e) Repair or replace hook latches or self-locking devices when they become inoperative.

(31) A qualified person must determine if a damaged hook needs to be replaced or can be repaired.

(32) When repairing a hook, the requirements below must be followed:

(a) Unless otherwise recommended by the manufacturer, only a qualified person can repair cracks, nicks and gouges by grinding longitudinally, following the contour of the hook.

> *Note: The dimension of the hook cannot be reduced more than 10% of its original value, unless otherwise recommended by the manufacturer.*

(b) All other repairs must be performed by the hook manufacturer or the qualified person.

(c) Weld repairs or reshaping must not be performed on hooks, unless approved by the manufacturer.

(33) Replacement parts, such as load pins for clevis hooks must be at least equal to the original manufacturer's specifications.

> *Note: For requirements relating to wedge sockets, see WAC 296-155-56115(2).*

(34) Before traveling a crane with a load, it must be determined that this practice is not prohibited by the manufacturer. If not, a qualified person must be responsible for the operation. Decisions such as the necessity to reduce crane ratings, load position, boom location, ground support, travel route, and speed of movement must be in accordance with that person's determination. Specified tire pressure must be maintained. The boom should be carried in line with the direction of travel. Sudden starts and stops should be avoided.

(35) The crane/derrick must not be assembled or used unless ground conditions are firm, drained, and graded to a sufficient extent as determined by a competent person, so that, in conjunction (if necessary) with the use of supporting materials, the crane/derrick manufacturer's specifications for adequate support and degree of level of the crane/derrick are met. The requirement for the ground to be drained does not apply to marshes/wetlands. For additional requirements for self-erecting tower cranes, see WAC 296-155-54100.

(36) **The controlling entity must**:

(a) Ensure that ground preparations necessary to meet the requirements in subsection (35) of this section are provided.

(b) Inform the user of the crane/derrick and the operator of the location of hazards beneath the crane/derrick set-up area (such as voids, tanks, utilities) if those hazards are identified in documents (such as site drawings, as-built drawings, and soil analyses) if they are available to the controlling entity that are in the possession of the controlling entity (whether at the site or off-site) or the hazards are otherwise known to that controlling entity.

(37) If there is no controlling entity for the project, the requirement in subsection (36)(a) of this section must be met by the employer that has authority at the site to make or arrange for ground preparations needed to meet subsection (35) of this section.

(38) If the assembly/disassembly director or the operator determines that ground conditions do not meet the requirements in subsection (35) of this section, that person's employer must have a discussion with the controlling entity regarding the ground preparations that are needed so that, with the use of suitable supporting materials/devices (if necessary), the requirements in subsection (35) of this section can be met.

(39) This section does not apply to cranes designed for use on railroad tracks when used on railroad tracks that are part of the general railroad system of transportation that is regulated pursuant to the Federal Railroad Administration under 49 C.F.R. Part 213, and that comply with applicable Federal Railroad Administration requirements.

(40) **Multiple crane/derrick coordination**. Where any part of a crane/derrick is within the working radius of another crane/derrick, the controlling entity must institute a system to coordinate operations. If there is no controlling entity, the employer (if there is only one employer operating the multiple pieces of equipment), or employers, must institute such a system.

(41) **Multiple crane or multiple load line lifts**.

(a) Plan development. Before beginning a crane/derrick operation in which more than one crane/derrick will be supporting the load or multiple load lines on one crane will be supporting the load, the operation must be planned. The planning must meet the following requirements:

(i) The plan must be developed by a qualified person.

(ii) The plan must be designed to ensure that the requirements of this part are met.

(iii) Where the qualified person determines that engineering expertise is needed for the planning, you must ensure that it is provided.

(b) Plan implementation.

(i) The multiple-crane/derrick lift or multiple load line lifts must be directed by a person who meets the criteria for both a competent person and a qualified person, or by a competent person who is assisted by one or more qualified persons (lift director).

(ii) The lift director must review the plan in a meeting with all workers who will be involved with the operation.

(42) **Work area control**. Swing radius hazards.

(a) The requirements in (b) of this subsection apply where there are accessible areas in which the crane's rotating superstructure (whether permanently or temporarily mounted) poses a reasonably foreseeable risk of:

(i) Striking and injuring an employee; or

(ii) Pinching/crushing an employee against another part of the crane or another object.

(b) To prevent employees from entering these hazard areas, you must:

(i) Train each employee assigned to work on or near the crane (authorized personnel) in how to recognize struck-by and pinch/crush hazard areas posed by the rotating superstructure.

(ii) Erect and maintain control lines, warning lines, railings or similar barriers to mark the boundaries of the hazard areas.

Exception:	*When you can demonstrate that it is neither feasible to erect such barriers on the ground nor on the crane, the hazard areas must be clearly marked by a combination of warning signs (such as Danger-Swing/Crush Zone) and high visibility markings on the crane that identify the hazard areas. In addition, you must train each employee to understand what these markings signify.*

(c) Protecting employees in the hazard area.

(i) Before an employee goes to a location in the hazard area that is out of view of the operator, the employee (or someone instructed by the employee) must ensure that the operator is informed that he/she is going to that location.

(ii) Where the operator knows that an employee went to a location covered by subsection (43)(c)(i) of this section, the operator must not rotate the superstructure until the operator is informed in accordance with a prearranged system of communication that the employee is in a safe position.

(d) Where any part of a crane/derrick is within the working radius of another crane/derrick, the controlling entity must institute a system to coordinate operations. If there is no controlling entity, the employer (if there is only one employer operating the multiple pieces of equipment), or employers, must institute such a system.

(43) **Keeping clear of the load**.

(a) Where available, hoisting routes that minimize the exposure of employees to hoisted loads must be used to the extent consistent with public safety.

(b) While the operator is not moving a suspended load, no employee is allowed to be within the fall zone, except for employees:

(i) Engaged in hooking, unhooking or guiding a load; or

(ii) Engaged in the initial attachment of the load to a component structure; or

(iii) Operating a concrete hopper or concrete bucket.

(c) When employees are engaged in hooking, unhooking, or guiding the load, or in the initial connection of a load to a component or structure, and are within the fall zone, all of the following criteria must be met:

(i) The materials being hoisted must be rigged to prevent unintentional displacement.

(ii) Hooks with self-closing latches or their equivalent must be used, see subsection 29(b) of this section. "J" hooks are permitted to be used for setting wooden trusses.

(iii) The materials must be rigged by a qualified rigger.

(d) Receiving a load. Only employees needed to receive a load are permitted to be within the fall zone when a load is being landed.

(e) During a tilt-up or tilt-down operation:

(i) Employees are not allowed to be directly under the load.

(ii) Only employees' essential to the operation are allowed to be in the fall zone (but not directly under the suspended load).

Note: An employee is essential to the operation if the employee is conducting one of the following operations and you can demonstrate it is infeasible for the employee to perform that operation from outside the fall zone:

- *Physically guide the load;*
- *Closely monitor and give instructions regarding the load's movement; or*
- *Either detach it from or initially attach it to another component or structure (such as, but not limited to, making an initial connection or installing bracing).*

(f) Boom free fall is prohibited when an employee is in the fall zone of the boom or load, and load line free fall is prohibited when an employee is directly under the load. See subsections (44) through (47) of this section.

(44) **Boom free fall prohibitions**.

(a) The use of cranes in which the boom is designed to free fall (live boom) is prohibited in each of the following circumstances:

(i) An employee is in the fall zone of the boom or load.

(ii) An employee is being hoisted.

(iii) The load or boom is directly over a power line, or over any part of the area listed in Table 4 located in WAC 296-155-53408, clearance distance to each side of the power line; or any part of the area extending the Table 4 clearance distance to each side of the power line is within the radius of vertical travel of the boom or the load.

(iv) The load is over a shaft, except where there are no employees in the shaft.

(v) The load is over a cofferdam, except where there are no employees in the fall zone of the boom or the load.

(vi) Lifting operations are taking place in a refinery or tank farm.

(b) The use of cranes in which the boom is designed to free fall (live boom) is permitted only where none of the circumstances listed in (a) of this subsection are present and:

(i) The crane was manufactured prior to October 31, 1984; or

(ii) The crane is a floating crane or a land crane on a vessel/flotation device.

(45) **Preventing boom free fall**. Where the use of a crane with a boom that is designed to free fall (live boom) is prohibited (see subsection (44)(a) of this section), the boom hoist must have a secondary mechanism or device designed to prevent the boom from falling in the event the primary system used to hold or regulate the boom hoist fails, as follows:

(a) Friction drums must have:

(i) A friction clutch and, in addition, a braking device, to allow for controlled boom lowering.

(ii) A secondary braking or locking device, which is manually or automatically engaged, to back-up the primary brake while the boom is held (such as a secondary friction brake or a ratchet and pawl device).

(b) Hydraulic drums must have an integrally mounted holding device or internal static brake to prevent boom hoist movement in the event of hydraulic failure.

(c) Neither clutches nor hydraulic motors must be considered brake or locking devices for purposes of this part.

(d) Hydraulic boom cylinders must have an integrally mounted holding device.

(46) **Preventing uncontrolled retraction**. Hydraulic telescoping booms must have an integrally mounted holding device to prevent the boom from retracting in the event of hydraulic failure.

(47) **Load line free fall**. In each of the following circumstances, controlled load lowering is required and free fall of the load line hoist is prohibited:

(a) An employee is directly under the load.

(b) An employee is being hoisted.

(c) The load is directly over a power line, or over any part of the area listed in Table 4, located in WAC 296-155-53408, clearance distance to each side of the power line; or any part of the area extending the Table 4 of WAC 296-155-53408, clearance distance to each side of the power line is within the radius of vertical travel of the load.

(d) The load is over a shaft.

(e) The load is over a cofferdam, except where there are no employees in the fall zone of the load.

(48) You must not allow employees to ride on the hook or load.

(49) The hoist rope must not be wrapped around the load.

(50) All loads must be attached to the hook by means of suitable slings or other devices of sufficient lifting capacity.

(51) When moving a load it must be well secured and balanced in the sling or lifting device before it is lifted more than a few inches.

(52) **Leaving the crane/derrick unattended**. The operator must not leave the controls while the load is suspended, except where all of the following are met:

(a) The operator remains adjacent to the crane/derrick and is not engaged in any other duties.

(b) The load is to be held suspended for a period of time exceeding normal lifting operations.

(c) The competent person determines that it is safe to do so and implements measures necessary to restrain the boom hoist and telescoping, load, swing, and outrigger or stabilizer functions.

(d) Barricades or caution lines, and notices, are erected to prevent all employees from entering the fall zone. No employees, including those listed in subsection (43)(b), (d), and (e) of this section, are permitted in the fall zone.

EXEMPTION:
The provisions in this section do not apply to working gear (such as slings, spreader bars, ladders, and welding machines) where the weight of the working gear is negligible relative to the lifting capacity of the equipment as positioned, and the working gear is suspended over an area other than an entrance or exit.

Note: For additional requirements relating to leaving the crane unattended for tower, self-erecting, overhead/bridge and derricks see:

- *WAC 296-155-53915, Tower cranes-Operations;*
- *WAC 296-155-54115, Self-erecting tower cranes-Operations;*
- *WAC 296-155-54215, Overhead/bridge cranes and gantry cranes-Operations;*
- *WAC 296-155-54320, Derricks-Operations.*

(53) While moving the load the lift and swing path must be clear of obstructions.

(54) Before starting to lift the following conditions must be met:

(a) The hoist rope must not be kinked.

(b) Multiple-part lines must not be twisted around each other.

(c) The hook must be brought over the load in such a manner as to minimize swinging.

(d) If the competent person determines that there is slack rope condition requiring respooling of the rope, it must be verified (before starting the lift) that the rope is seated on the drum and in the sheaves as the slack is removed.

(e) The competent person must adjust the crane/derrick and/or operations to address the effect of wind, ice, and snow on equipment stability and rated capacity.

(f) If possible, the load must be free to be lifted; it is neither caught nor attached to other objects.

(55) During lifting operations, care must be taken that there is no sudden acceleration or deceleration of the moving load and that the load boom or other parts of the crane do not contact any obstruction. Rotational speed of the crane/derrick must be such that the load does not swing out beyond the radius at which it can be controlled.

(56) Side loading of booms (jibs) must be limited to freely suspended loads. Cranes must not be used for dragging loads sideways.

(57) The operator must test the brakes each time a load that is 90% or more of the maximum line pull is handled by lifting the load a few inches and applying the brakes. In duty cycle and repetitive lifts where each lift is 90% or more of the maximum line pull, this requirement applies to the first lift but not to successive lifts.

(58) Modifications or additions which affect the capacity or safe operation of the crane/derrick are prohibited except where the requirements of (a) or (b) of this subsection are met. For recertification requirements see WAC 296-155-53214 (1)(c).

(a) Manufacturer review and approval.

(i) The manufacturer approves the modifications/additions in writing.

(ii) The load charts, procedures, instruction manuals and instruction plates/tags/decals are modified as necessary to accord with the modification/addition.

(iii) The original safety factor of the crane/derrick is not reduced.

(b) Where manufacturer is unavailable or has refused to review a request. The manufacturer is provided a detailed description of the proposed modification/addition, is asked to approve the modification/addition, but it declines to review the technical merits of the proposal or fails, within 30 days, to acknowledge the request or initiate the review, and all of the following are met:

(i) A registered professional engineer who is a qualified person with respect to the crane/derrick involved:

(A) Approves the modification/addition and specifies the crane/derrick configurations to which that approval applies; and

(B) Modifies load charts, procedures, instruction manuals and instruction plates/tags/decals as necessary to accord with the modification/addition.

(ii) The original safety factor of the crane/derrick is not reduced.

(c) Manufacturer does not complete the review within 120 days of the request. The manufacturer is provided a detailed description of the proposed modification/addition, is asked to approve the modification/addition, agrees to review the technical merits of the proposal, but fails to complete the review of the proposal within 120 days of the date it was provided the detailed description of the proposed modification/addition, and the requirements of subsection (58)(b)(i) and (ii) of this section are met.

(d) Multiple manufacturers of equipment designed for use on marine worksites. The equipment is designed for marine worksites, contains major structural components from more than one manufacturer, and the requirements of subsection (58)(b)(i) and (ii) of this section are met.

(59) You must not make any modifications or additions which affect the capacity or safe operation of the crane without the manufacturers' written approval. If components of more than one crane manufacturer are being combined, you must obtain written approval from all manufacturers prior to use. If the manufacturer(s) is/are not available a registered professional structural engineer's (RPSE) written approval must be obtained. If such modifications or changes are made, the capacity, operation, and maintenance instruction plates, tags, or decals, must be changed accordingly. In no case must the original safety factor of the crane be reduced.

> *Note: The provisions in subsections (58) and (59) of this section do not apply to modifications made or approved by the U.S. military.*

(60) All applicable controls must be tested by the operator at the start of a new shift, if possible. If any controls fail to operate properly, they must be adjusted or repaired before operations are initiated.

(61) Except for proof load testing required under WAC 296-155-53202 through 296-155-53212, no crane/derrick is permitted to be loaded beyond the specifications of the load rating chart, unless authorized by the crane manufacturer. The operator must not be required to operate the crane/derrick in a manner that would violate this requirement.

(62) **Load weight**. The operator must verify that the load is within the rated capacity of the crane/derrick by at least one of the following methods:

(a) The weight of the load must be determined from a reliable source recognized by the industry (such as the load's manufacturer), or by a reliable calculation method recognized by the industry (such as calculating a steel beam from measured dimensions and a known per foot weight), or by other equally reliable means. In addition, when requested by the operator, this information must be provided to the operator prior to the lift; or

(b) The operator must begin hoisting the load to determine, using a load weighing device, load moment indicator, rated capacity indicator, or rated capacity limiter. If the load exceeds 75% of the maximum rated capacity at the longest radius that will be used during the lift operation, the operator must not proceed with the lift until it is verified that the weight of the load is in accordance with (a) of this subsection.

(63) Tag lines or restraint lines must be used when rotation or swinging of the load is hazardous or if the load needs guidance. Tag lines are not required when all of the following criteria are met:

- The suspended load can be expected to remain still when in a static (nonmoving) condition or does not swing or rotate in a hazardous manner;
- The movement of the crane or boom cannot be expected to cause the load to swing or rotate in an uncontrolled manner that may create a hazard;
- The operator is in control of the movement of the load and a hazardous condition is not created.

(64) All brakes must be adjusted in accordance with manufacturer procedures to prevent unintended movement.

(65) Safety devices and/or operational aids must not be used as a substitute for the exercise of professional judgment by the operator.

(66) **Storm warning**. When a local storm warning has been issued, the competent person must determine whether it is necessary to implement manufacturer recommendations for securing the crane/derrick.

(67) Whenever there is a concern as to safety, the operator has the authority to stop and refuse to handle loads until a qualified person has determined that safety has been assured.

(68) **Tag-out**.

(a) Tagging out of service. Where you have taken the crane/derrick out of service, a tag must be placed in the cab or at the operator station stating that the equipment is out of service and is not to be used. Where you have taken a function(s) out of service, a tag must be placed in a conspicuous position stating that the function is out of service and is not to be used.

(b) Response to do not operate/tag-out signs.

(i) If there is a warning (tag-out or maintenance/do not operate) sign on the crane/derrick or starting control, the operator must not activate the switch or start the crane/derrick until the sign has been removed by a person authorized to remove it, or until the operator has verified that:

(A) No one is servicing, working on or otherwise in a dangerous position around the machine.

(B) The crane/derrick has been repaired and is working properly.

(ii) If there is a warning (tag-out or maintenance/do not operate) sign on any other switch or control, the operator must not activate that switch or control until the sign has been removed by a person authorized to remove it, or until the operator has verified that the requirements in (b)(i)(A) and (B) of this subsection have been met.

Note: For additional lockout/tagout procedures for electrical circuits, see WAC 296-155-429.

(69) **If crane/derrick adjustments or repairs are necessary**:

(a) The operator must, in writing, promptly inform the person designated by you to receive such information and, where there are successive shifts, to the next operator; and

(b) You must notify all affected employees, at the beginning of each shift, of the necessary adjustments or repairs and all alternative measures.

(70) All cranes and derricks mounted on barges or other floating structures must meet the requirements as outlined in ASME B30.8-2004 for construction, installation, inspection, maintenance and operation.

(71) **Swinging locomotive cranes**. A locomotive crane must not be swung into a position where railway cars on an adjacent track could strike it, until it is determined that cars are not being moved on the adjacent track and that proper flag protection has been established.

(72) **Remote control cranes/derricks**. Before an operator leaves the crane/derrick to operate remotely, the operator must ensure that the crane/derrick will be used in accordance with the manufacturer's recommendations. Provisions must be made to prevent simultaneous activation of controls when more than one control station (remote control) is provided.

(73) Remote-operated cranes/derricks must function so that if the control signal for any crane/derrick motion becomes ineffective, the crane/derrick motion must stop.

(74) Remote-operated cranes/derricks must be equipped with an “emergency stop” system, located at the operator's remote station to provide the means to remove power from the crane in the event of a malfunction.

(75) A preventative maintenance program must be established based on the recommendation of the crane/derrick manufacturer. If manufacturer's recommendations are not available, then those of a qualified person must be followed. Dated records must be kept available.

(76) **Working with a diver**. You must meet the following additional requirements when working with a diver in the water:

(a) If a crane/derrick is used to get a diver into and out of the water, it must not be used for any other purpose until the diver is removed from the water. When used for more than one diver, it must not be used for any other purpose until all divers are all out of the water.

(b) The operator must remain at the controls of the crane/derrick at all times.

(c) In addition to the requirements in WAC 296-155-53406, Signals, either:

(i) A clear line of sight must be maintained between the operator and dive tender; or

(ii) The signals between the operator and dive tender must be transmitted electronically.

[Statutory Authority: RCW 49.17.010, .040, .050, and .060. 16-09-085 (Order 15-08), § 296-155-53400, filed 04/19/16, effective, 05/20/16. Statutory Authority: RCW 49.17.010, .004, .050, and .060. 13-02-068 (Order 12-14), § 296-155-53400, filed 12/31/12, effective 02/01/13. Statutory Authority: RCWs 47.17.010, 49.17.040, 49.17.050, 49.17.440 and 49.17.060. 12-01-086 (Order 08-32), § 296-155-53400, filed 12/20/11, effective 02/01/12.]

WAC 296-155-53401 Duties of assigned personnel.

(1) While the organizational structure of various construction activities may differ, the following duties are described here for purposes of assignment. All assignments listed below must be assigned in the worksite organization. (A single individual may perform one or more of these assignments concurrently.)

- Crane owner: Has custodial control of a crane by virtue of lease or ownership.
- Crane user: Arranges the crane's presence on a worksite and controls its use there.
- Site supervisor: Exercises supervisory control over the worksite on which a crane is being used and over the work that is being performed on that site.
- Lift director: Directly oversees the work being performed by a crane and the associated rigging crew.
- Crane operator: Directly controls the crane's functions.

(2) **Duties of the crane owner and crane user**. In some situations the owner and the user may be the same entity and therefore would have the same duties assigned. In other cases, the user may lease or rent a crane from the owner without supervisory, operational, maintenance, support personnel, or services from the owner. In these situations, subsection (3)(c) and (d) of this section apply.

(3) **The crane owner's duties would include the following**:

(a) Providing a crane that meets the requirements of Part L of this chapter as well as specific job requirements defined by the user.

(b) Providing a crane and all necessary components, specified by the manufacturer, that meets the user's requested configuration and capacity.

(c) Providing all applicable load/capacity chart(s) and diagrams.

(d) Providing additional technical information pertaining to the crane, necessary for crane operation, when requested by the crane user.

(e) Providing field assembly, disassembly, operation, maintenance information, and warning decals and placards installed as prescribed by the crane manufacturer.

(f) Ensuring that inspection, testing, and maintenance are performed in accordance with Part L of this chapter and informing the crane user of these requirements.

(g) Using personnel that meet the requirements for a competent and/or qualified person as defined in WAC 296-155-52902 for the purposes of inspections, maintenance, repair, transport, assembly, and disassembly.

(4) **The crane user's duties would include the following**:

(a) Complying with the requirements of Part L of this chapter, manufacturer's requirements, and those regulations applicable at the worksite.

(b) Using supervisors for crane activities that meet the requirements for a qualified person as defined in WAC 296-155-52902.

(c) Ensuring that the crane is in proper operating condition prior to initial use at the worksite by:

(i) Verifying that the crane owner has provided documentation that the crane meets the requirements of Part L of this chapter.

(ii) Verifying that inspections have been performed as prescribed in WAC 296-155-53405.

(d) Verifying that the crane has the necessary lifting capacity to perform the proposed lifting operations in the planned configuration.

(e) Using crane operators that meet the requirements of WAC 296-155-53300 and are qualified to perform the tasks that will be required with the crane to which they are assigned to operate.

(f) Ensuring the assigned operator(s) has been notified of adjustments or repairs that have not been completed, prior to commencing crane operations.

(g) Using personnel that meet the requirements for a competent and/or qualified person as defined in WAC 296-155-52902 for the purposes of inspections, maintenance, repair, transport, assembly, and disassembly.

(h) Ensuring that all personnel involved in maintenance, repair, transport, assembly, disassembly, and inspection are aware of their assigned duties, and the associated hazards.

(i) Ensuring that the inspection, testing, and maintenance as required by this part are followed and any other related requirements specified by the crane owner.

(5) **The site supervisor's duties would include the following**:

(a) Ensuring that the crane meets the requirements of Part L of this chapter prior to initial site usage.

(b) Determining if additional regulations are applicable to crane operations.

(c) Ensuring that a qualified person is designated as the lift director.

(d) Ensuring that crane operations are coordinated with other job site activities that will be affected by or will affect lift operations.

(e) Ensuring that the area for the crane is adequately prepared. The preparation includes, but is not limited to, the following:

(i) Access roads for the crane and associated equipment;

(ii) Sufficient room to assemble and disassemble the crane;

(iii) An operating area that is suitable for the crane with respect to levelness, surface conditions, support capability, proximity to power lines, excavations, slopes, underground utilities, subsurface construction, and obstructions to crane operation;

(iv) Traffic control as necessary to restrict unauthorized access to the crane's working area.

(f) Ensuring that work involving the assembly and disassembly of a crane is supervised by an assembly/disassembly director. See WAC 296-155-53402.

(g) Ensuring that crane operators meet the requirements of WAC 296-155-53300.

(h) Ensuring that conditions which may adversely affect crane operations are addressed. Such conditions include, but are not limited to, the following:

(i) Poor soil conditions;

(ii) Wind velocity or gusting winds;

(iii) Heavy rain;

(iv) Fog;

(v) Extreme cold;

(vi) Artificial lighting.

(i) Allowing crane operation near electric power lines only when the requirements of WAC 296-155-53408 have been met.

(j) Permitting special lifting operations only when equipment and procedures required by this part, the crane manufacturer, or a qualified person, are employed. Such operations include, but are not limited to, the following:

(i) Multiple crane lifts;

(ii) Multiple load line lifts;

(iii) Lifting personnel;

(iv) Pick and carry operations;

(v) Mobile/articulating cranes operating on barges.

(k) Ensuring that work performed by the rigging crew is supervised by a qualified rigger. See WAC 296-155-53406.

(l) Ensuring that crane maintenance is performed by a qualified person. See WAC 296-155-53404.

(6) **The lift director's duties would include the following**:

(a) Being present at the job site and overseeing the lifting operations;

(b) Stopping crane operations if alerted to an unsafe condition affecting those operations;

(c) Ensuring that the preparation of the area needed to support crane operations has been completed before crane operations commence;

(d) Ensuring necessary traffic controls are in place to restrict unauthorized access to the crane's work area;

(e) Ensuring that personnel involved in crane operations understand their assigned duties, and the associated hazards;

(f) Addressing safety concerns raised by the operator or other personnel and deciding if it is necessary to overrule those concerns and directs crane operations to continue. In all cases, the manufacturer's criteria for safe operation and the requirements of this chapter and any other applicable safety and health standards must be adhered to;

(g) Assigning qualified signal person(s) and conveying that information to the crane operator;

(h) Ensuring that signal persons assigned meet the qualification requirements located in WAC 296-155-53302;

(i) Allowing crane operation near electric power lines only when the requirements of WAC 296-155-53408 and any additional requirements determined by the site supervisor have been met;

(j) Ensuring precautions are implemented when hazards associated with special lifting operations are present. Such operations include, but are not limited to, the following:

(i) Multiple crane lifts;

(ii) Multiple load line lifts;

(iii) Lifting personnel;

(iv) Pick and carry operations;

(v) Mobile/articulating cranes operating on barges.

(k) Ensuring that the applicable requirements of WAC 296-155-547 through 296-155-55405 are met when lifting personnel;

(l) Informing the crane operator of the weight of loads to be lifted, as well as the lifting, moving, and placing locations for these loads;

(m) Obtaining the crane operator's verification that this weight does not exceed the crane's rated capacity;

(n) Ensuring that a crane's load rigging is performed by a qualified rigger as defined in WAC 296-155-53306;

(o) Ensuring that the load is properly rigged and balanced before it is lifted more than a few inches.

(7) Whenever the crane operator has doubt or concerns as to the safety of crane operations, the operator must stop the crane's functions in a controlled manner. Lift operations can only resume after safety concerns have been resolved or the continuation of crane operations is directed by the lift director as outlined in subsection (6) of this section. The crane operator's duties would include the following:

(a) Reviewing the requirements for the crane with the lift director before operations;

(b) Knowing what types of site conditions could adversely affect the operation of the crane and consulting with the lift director concerning the possible presence of those conditions;

(c) Understanding and applying the information contained in the crane manufacturer's operating manual;

(d) Understanding the crane functions and limitations as well as its particular operating characteristics;

(e) Using the crane's load/capacity chart(s) and diagrams and applying all notes and warnings related to the charts to confirm the correct crane configuration to suit the load, site, and lift conditions;

(f) Refusing to operate the crane when any portion of the load or crane would enter the prohibited zone of energized power lines except as defined in WAC 296-155-53408;

(g) Performing a daily inspection as specified in WAC 296-155-53405;

(h) Promptly reporting the need for any adjustments or repairs to the appropriate person;

(i) Following applicable lockout/tagout procedures. See WAC 296-155-53400(67);

(j) Not operating the crane when physically or mentally unfit;

(k) Ensuring that all controls are in the off or neutral position and that all personnel are in the clear before energizing the crane or starting the engine;

(l) Not engaging in any practice that will divert their attention while actually operating the crane controls;

(m) Testing the crane function controls that will be used and operating the crane only if those function controls respond properly;

(n) Operating the crane's functions, under normal operating conditions, in a smooth and controlled manner;

(o) Knowing and following the procedures specified by the manufacturer or approved by a qualified person, for assembly, disassembly, setting up, and reeving the crane;

(p) Knowing how to travel the crane;

(q) Observing each outrigger during extension, setting, and retraction or using another worker to observe each outrigger during extension, setting, or retraction;

(r) Ensuring that the load and rigging weight(s) have been provided;

(s) Calculating or determining the net capacity for all configurations that will be used and verifying, using the load/capacity chart(s), that the crane has sufficient net capacity for the proposed lift;

(t) Considering all factors known that might affect the crane capacity and informing the lift director of the need to make appropriate adjustments;

(u) Knowing the standard and special signals as specified in WAC 296-155-53406 and responding to such signals from the person who is directing the lift or a qualified signal person;

(v) If power fails during operations:

(i) Setting all brakes and locking devices.

(ii) Moving all clutches or other power controls to the off or neutral position.

(iii) Landing any load suspended below the hook under brake control if practical.

(w) Before leaving the crane unattended:

(i) Landing any load suspended below the hook, unless the requirements of WAC 296-155-53400(52) are met.

(ii) Disengaging the master clutch.

(iii) Setting travel, swing, boom brakes, and other locking devices.

(iv) Putting controls in the off or neutral position.

(v) Stopping the engine. An exception to this may exist when crane operation is frequently interrupted during a shift and the operator must leave the crane. Under these circumstances, the engine may remain running and (w)(i) and (iv) of this subsection must apply. The operator must be situated where any entry to the crane can be observed.

(vi) Considering the recommendations of the manufacturer for securing the crane, when a local weather storm warning exists.

[Statutory Authority: RCW 49.17.010, .040, .050, and .060. 16-09-085 (Order 15-08), § 296-155-53401, filed 04/19/16, effective, 05/20/16. Statutory Authority: RCWs 47.17.010, 49.17.040, 49.17.050, 49.17.440 and 49.17.060. 12-01-086 (Order 08-32), § 296-155-53401, filed 12/20/11, effective 02/01/12.]

WAC 296-155-53402 Assembly/Disassembly.

(1) When assembling and disassembling crane/derrick (or attachments), you must comply with all applicable manufacturer prohibitions and must comply with either:

(a) Manufacturer procedures applicable to assembly and disassembly; or

(b) Employer procedures for assembly and disassembly. Employer procedures may be used only where you can demonstrate that the procedures used meet the requirements in subsection (17) of this section.

> *Note: You must follow manufacturer procedures when you use synthetic slings during assembly or disassembly of cranes/derricks, see subsection (19) of this section.*

(2) **Supervision - Competent/qualified person**.

(a) Assembly/disassembly must be directed by a person who meets the criteria for both a competent person and a qualified person, or by a competent person who is assisted by one or more qualified persons (assembly/disassembly director).

(b) Where the assembly/disassembly is being performed by only one person, that person must meet the criteria for both a competent person and a qualified person. For purposes of this part, that person is considered the assembly/disassembly director.

(3) **Knowledge of procedures**. The assembly/disassembly director must understand the applicable assembly/disassembly procedures.

(4) **Review of procedures**. The assembly/disassembly director must review the applicable assembly/disassembly procedures immediately prior to the commencement of assembly/disassembly unless the assembly/disassembly director has applied them to the same type and configuration of crane/derrick (including accessories, if any).

(5) **Preassembly inspection**.

(a) Prior to assembling crane/derrick components or attachments the assembly/disassembly director must inspect these components and attachments to ensure that they meet the manufacturer's recommendations. This inspection must include a visual inspection to ensure that the components and attachments are of sound physical condition and functional within the manufacturer's recommendations.

(b) Documentation of this inspection must remain at the job site while the crane/derrick is in use.

(6) **Crew instructions**.

(a) Before commencing assembly/disassembly operations, the assembly/disassembly director must ensure that the crew members understand the following:

(i) Their tasks;

(ii) The hazards associated with their tasks;

(iii) The hazardous positions/locations that they need to avoid.

Note: The employer must follow manufacturer procedures when an employer uses synthetic slings during assembly or disassembly of cranes/derricks, see subsection (19) of this section.

(b) During assembly/disassembly operations, before a crew member takes on a different task, or when adding new personnel during the operations, the requirements in (a)(i) through (iii) of this subsection must be met.

(7) **Protecting assembly/disassembly crew members out of operator view**.

(a) Before a crew member goes to a location that is out of view of the operator and is either: In, on, under, or near the crane/derrick (or load) where the crew member could be injured by movement of the crane/derrick (or load), the crew member must inform the operator that they are going to that location.

(b) Where the operator knows that a crew member went to a location covered by (a) of this subsection, the operator must not move any part of the crane/derrick (or load) until the operator is informed in accordance with a prearranged system of communication that the crew member is in a safe position.

(8) **Working under the boom, jib or other components**.

(a) When pins (or similar devices) are being removed, employees must not be under the boom, jib, or other components, except where the requirements in (b) of this subsection are met.

(b) Exception. Where you demonstrate that site constraints require one or more employees to be under the boom, jib, or other components when pins (or similar devices) are being removed, the assembly/disassembly director must implement procedures that minimize the risk of unintended dangerous movement and minimize the duration and extent of exposure under the boom. (See WAC 296-155-56430, Assembly/disassembly--Working under the boom, jib or other components--Sample procedures for minimizing the risk of unintended dangerous boom movement.)

(9) **Capacity limits**. During all phases of assembly/disassembly, rated capacity limits for loads imposed on the crane/derrick, components (including rigging), lifting lugs and crane/derrick accessories must not be exceeded.

(10) **Addressing specific hazards**. The assembly/disassembly director supervising the assembly/disassembly operation must address the hazards associated with the operation, which include:

(a) Site and ground bearing conditions. Site and ground conditions must be adequate for safe assembly/disassembly operations and to support the crane/derrick during assembly/disassembly (see WAC 296-155-53400 (34) through (38) for ground condition requirements).

(b) Blocking material. The size, amount, condition and method of stacking blocking must be sufficient to sustain the loads and maintain stability.

(c) Proper location of blocking. When used to support lattice booms or components, blocking must be appropriately placed to:

(i) Protect the structural integrity of the crane/derrick; and

(ii) Prevent dangerous movement and collapse.

(d) Verifying assist crane loads. When using an assist crane, the loads that will be imposed on the assist crane at each phase of assembly/disassembly must be verified in accordance with WAC 296-155-53400(61) before assembly/disassembly begins.

(e) Boom and jib pick points. The point(s) of attachment of rigging to a boom (or boom sections or jib or jib sections) must be suitable for preventing structural damage and facilitating safe handling of these components.

(f) Center of gravity.

(i) The center of gravity of the load must be identified if it is necessary for the method used for maintaining stability.

(ii) Where there is insufficient information to accurately identify the center of gravity, measures designed to prevent unintended dangerous movement resulting from an inaccurate identification of the center of gravity must be used. (See WAC 296-155-56430, Assembly/disassembly--Working under the boom, jib or other components--Sample procedures for minimizing the risk of unintended dangerous boom movement.)

(g) Stability upon pin removal. The boom sections, boom suspension systems (such as gantry A-frames and jib struts), and components must be rigged or supported to maintain stability upon the removal of the pins.

(h) Snagging. Suspension ropes and pendants must not be allowed to catch on the boom or jib connection pins or cotter pins (including keepers and locking pins).

(i) Struck by counterweights. The potential for unexpected movement from inadequately supported counterweights and from hoisting counterweights.

(j) Boom hoist brake failure. Each time reliance is to be placed on the boom hoist brake to prevent boom movement during assembly/disassembly, the brake must be tested prior to such reliance to determine if it is sufficient to prevent boom movement. If it is not sufficient, a boom hoist pawl, other locking device/back-up braking device, or another method of preventing dangerous movement of the boom (such as blocking or using an assist crane) from a boom hoist brake failure must be used.

(k) Loss of backward stability. Backward stability before swinging the upperworks, travel, and when attaching or removing crane/derrick components.

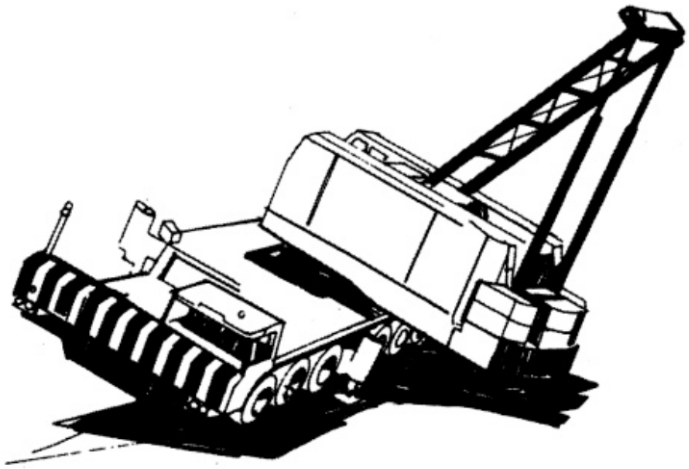

Figure 2-Lack of backward stability results in superstructure toppling.

(l) Wind speed and weather. The effect of wind speed and weather on the crane/derrick.

(11) **Cantilevered boom sections**. Manufacturer limitations on the maximum amount of boom supported only by cantilevering must not be exceeded. Where these are unavailable, a registered professional engineer familiar with the type of crane/derrick involved must determine this limitation in writing, which must not be exceeded.

(12) **Weight of components**. The weight of each of the components must be readily available.

(13) **Components and configuration**.

(a) The selection of components and configuration of the crane/derrick that affect the capacity or safe operation of this equipment must be in accordance with:

(i) Manufacturer's instructions, prohibitions, limitations, and specifications. Where these are unavailable, a registered professional engineer familiar with the type of crane/derrick involved must approve, in writing, the selection and configuration of components; or

(ii) Approved modifications that meet the requirements of WAC 296-155-53400 (58) and (59) (crane/derrick modifications).

(b) Post-assembly inspection. Upon completion of assembly, the crane/derrick must be inspected by the assembly/disassembly director to ensure compliance with (a) of this subsection and as follows:

(i) Upon completion of assembly, the crane/derrick must be inspected by a qualified person to assure that it is configured in accordance with manufacturer's criteria. For tower cranes, this inspection must be done by an accredited crane certifier.

(ii) Where manufacturer's criteria is unavailable, a qualified person must determine if a registered professional engineer (RPE) familiar with the type of crane/derrick involved is needed to develop criteria for the configuration. If an RPE is not needed, you must ensure that the criteria are developed by the qualified person. If an RPE is needed, the employer must ensure that they are developed by an RPE.

(c) Crane/derrick must not be used until an inspection demonstrates that it is configured in accordance with the applicable criteria.

(d) Documentation of this inspection must remain at the job site while the crane/derrick is in use.

(14) **Shipping pins**. Reusable shipping pins, straps, links, and similar equipment must be removed. Once they are removed they must either be stowed or otherwise stored so that they do not present a falling object hazard.

(15) **Pile driving**. Cranes used for pile driving must not have a jib attached during pile driving operations.

(16) The following are additional requirements for dismantling of booms and jibs, including dismantling for changing the length of booms and jibs (applies to both the use of manufacturer procedures and employer procedures):

(a) None of the pins in the pendants are to be removed (partly or completely) when the pendants are in tension. See, for example, Figure 3.

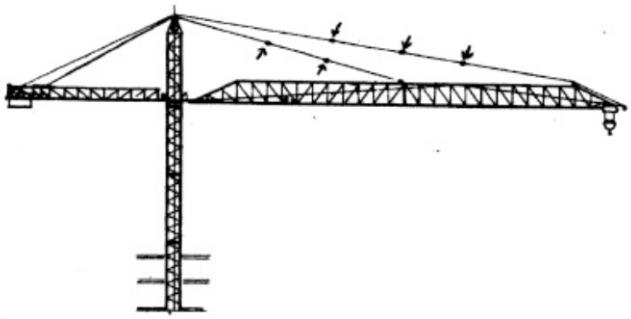

Figure 3-Pins (indicated by arrows) are not to be removed while pendants remain in tension.

(b) None of the pins (top and bottom) on boom sections located between the pendant attachment points and the crane/derrick body are to be removed (partly or completely) when the pendants are in tension. See, for example, Figures 4 and 5.

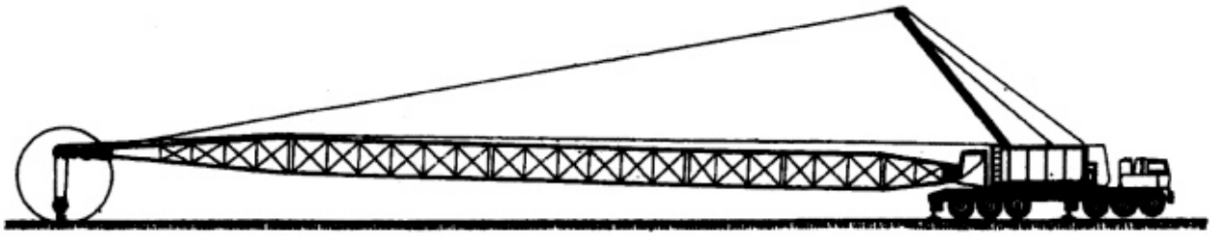

Figure 4-Pendant is in tension while connected to uppermost boom section, and no pins are to be removed.

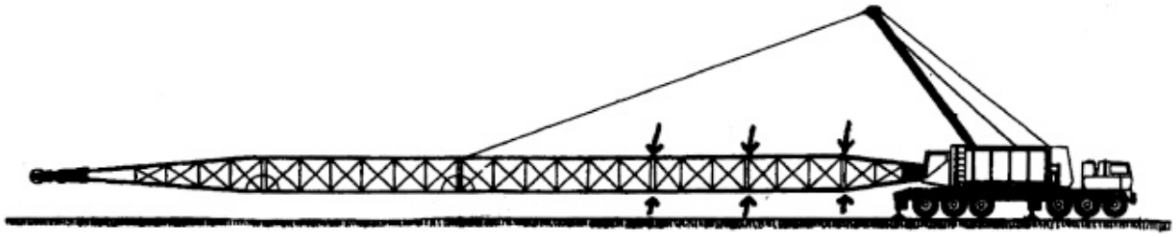

Figure 5-Pendant is in tension, and pins between pendant attachment point and crane body (indicated by arrows) are not to be removed. Note that, because the cantilevered portion of the boom is not supported, only the bottom pins ahead of the pendant may be removed. See Figure 8.

(c) None of the pins (top and bottom) on boom sections located between the uppermost boom section and the crane/derrick body are to be removed (partly or completely) when the boom is being supported by the uppermost boom section resting on the ground (or other support). See, for example, Figure 6.

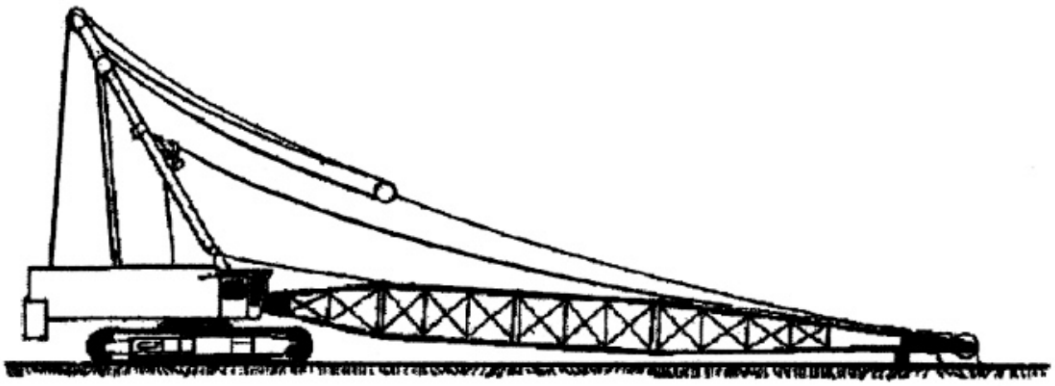

Figure 6-Uppermost boom section is resting on ground, and no pins between uppermost boom section and crane body are to be removed.

(d) None of the top pins on boom sections located on the cantilevered portion of the boom being removed (the portion being removed ahead of the pendant attachment points) are to be removed (partly or completely) until the cantilevered section to be removed is fully supported. See, for example, Figures 7 and 8.

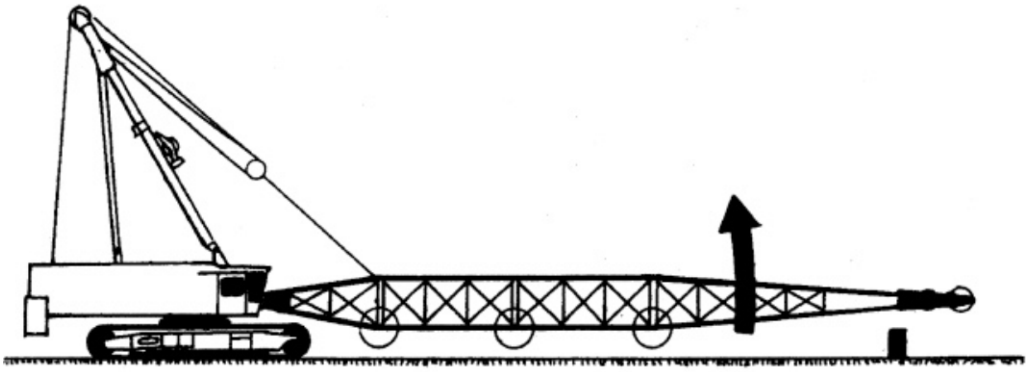

Figure 7-Cantilevered portion of boom is not supported, and top pins therefore are not to be removed. Bottom pins (circled) may be removed.

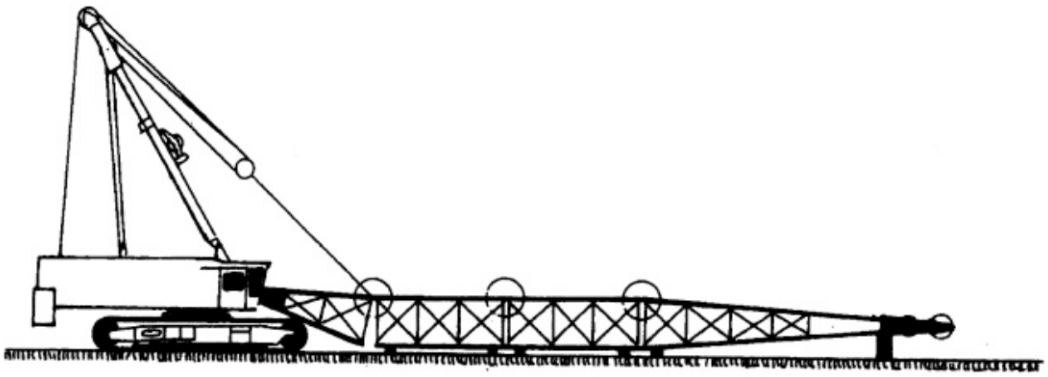

Figure 8-Cantilevered portion of boom is supported, and top pins (circled) may therefore be removed.

(17) When using employer procedures instead of manufacturer procedures for assembling or disassembling, you must ensure that the procedures are designed to:

(a) Prevent unintended dangerous movement, and to prevent collapse, of any parts of the crane/derrick.

(b) Provide adequate support and stability of all parts of the crane/derrick during the assembly/disassembly process.

(c) Position employees involved in the assembly/disassembly operation so that their exposure to movement or collapse is minimized.

(d) Qualified person. Employer procedures must be developed by a qualified person.

(18) **Outriggers and stabilizers**. When the load to be handled and the operating radius require the use of outriggers or stabilizers, or at any time when outriggers or stabilizers are used, the following requirements must be met:

(a) The outriggers or stabilizers must be either fully extended or, if manufacturer procedures permit, deployed as specified in the load chart.

(b) The outriggers must be set to remove the crane weight from the wheels, except for locomotive cranes (see (f) of this subsection for use of outriggers on locomotive cranes). This provision does not apply to stabilizers.

(c) When outrigger floats are used, they must be attached to the outriggers. When stabilizer floats are used they must be attached to the stabilizers.

(d) Each outrigger or stabilizer must be visible to the operator or to a signal person during extension and setting.

(e) Outrigger and stabilizer blocking must:

(i) Meet the requirements in subsection (10)(b) and (c) of this section.

(ii) Be placed only under the outrigger or stabilizer float/pad of the jack or, where the outrigger or stabilizer is designed without a jack, under the outer bearing surface of the extended outrigger or stabilizer beam.

(f) For locomotive cranes, when using outriggers or stabilizers to handle loads, the manufacturer's procedures must be followed. When lifting loads without using outriggers or stabilizers, the manufacturer's procedures must be met regarding truck wedges or screws.

(19) **Rigging**. In addition to the following requirements in WAC 296-155-556, 296-155-558, 296-155-560 and 296-155-562 and other requirements in this and other standards applicable to rigging, when rigging is used for assembly/disassembly, you must ensure that:

(a) The rigging work is done by a qualified rigger. See WAC 296-155-53306.

(b) Synthetic slings are protected from: Abrasive, sharp or acute edges, and configurations that could cause a reduction of the sling's rated capacity, such as distortion or localized compression. See WAC 296-155-55815(6), 296-155-55820(6) and 296-155-55825(6).

> *Note: Requirements for the protection of wire rope slings are contained in WAC 296-155-55805.*

(c) When synthetic slings are used, the synthetic sling manufacturer's instructions, limitations, specifications and recommendations must be followed.

[Statutory Authority: RCW 49.17.010, .040, .050, and .060. 16-09-085 (Order 15-08), § 296-155-53402, filed 04/19/16, effective, 05/20/16. Statutory Authority: RCW 49.17.010, .004, .050, and .060. 13-02-068 (Order 12-14), § 296-155-53402, filed 12/31/12, effective 02/01/13. Statutory Authority: RCWs 47.17.010, 49.17.040, 49.17.050, 49.17.440 and 49.17.060. 12-01-086 (Order 08-32), § 296-155-53402, filed 12/20/11, effective 02/01/12.]

WAC 296-155-53403 Fall Protection.

(1) **Application**.

(a) Subsections (2), (3)(b), (5) and (6) of this section apply to all cranes/derricks covered by this part except tower cranes.

(b) Subsections (3)(a), (4), (7), (10) and (11) of this section apply to all cranes/derricks covered by this part.

(c) Subsections (3)(c) and (9) of this section apply only to tower cranes.

(2) **Boom walkways**.

(a) Cranes/derricks manufactured after the effective date of this section with lattice booms must be equipped with walkways on the boom(s) if the vertical profile of the boom (from cord centerline to cord centerline) is 6 or more feet.

(b) Boom walkway criteria. The walkways must be at least 12 inches wide.

(3) **Steps, handholds, ladders, grabrails, guardrails and railings**.

(a) All steps, handholds, ladders and guardrails/railings/grabrails must be maintained in good condition.

(b) Cranes/derricks manufactured after the effective date of this section must be equipped so as to provide safe access and egress between the ground and the operator work station(s), including the forward and rear positions, by the provision of devices such as steps, handholds, ladders, and guardrails/railings/grabrails. These devices must meet the following criteria:

(i) Steps, handholds, ladders and guardrails/railings/grabrails must meet the criteria of SAE J185 (May 2003) or ISO 11660-2:1994(E) except where infeasible.

(ii) Walking/stepping surfaces, except for crawler treads, must have slip-resistant features/properties (such as diamond plate metal, strategically placed grip tape, expanded metal, or slip-resistant paint).

(c) Tower cranes manufactured after the effective date of this section must be equipped so as to provide safe access and egress between the ground and the cab, machinery platforms, and tower (mast), by the provision of devices such as steps, handholds, ladders, and guardrails/railings/grabrails. These devices must meet the following criteria:

(i) Steps, handholds, ladders, and guardrails/railings/grabrails must meet the criteria of ISO 11660-1:2008(E) and ISO 11660-3:2008(E) or SAE J185 (May 2003) except where infeasible.

(ii) Walking/stepping surfaces must have slip-resistant features/properties (such as diamond plate metal, strategically placed grip tape, expanded metal, or slip-resistant paint).

(4) Personal fall arrest and fall restraint systems must conform to the criteria in WAC 296-155-24510. Body harnesses must be used in personal fall arrest and fall restraint systems.

(5) For nonassembly/disassembly work, you must provide and ensure the use of fall protection equipment for employees who are on a walking/working surface with an unprotected side or edge more than 6 feet above a lower level as follows:

(a) When moving point-to-point:

(i) On nonlattice booms (whether horizontal or not horizontal).

(ii) On lattice booms that are not horizontal.

(iii) On horizontal lattice booms where the fall distance is 10 feet or more.

(b) While at a work station on any part of the crane (including the boom, of any type).

> *Note: If the equipment is running and the employee is at or near the draw-works, precautions should be taken to ensure the fall protection gear will not become entangled.*

(6) For assembly/disassembly work, you must provide and ensure the use of fall protection equipment for employees who are on a walking/working surface with an unprotected side or edge more than 10 feet above a lower level.

> *Note: If the equipment is running and the employee is at or near the draw-works, precautions should be taken to ensure the fall protection gear will not become entangled.*

(7) **Anchorage criteria**.

(a) Anchorages used for attachment of personal fall arrest equipment must be independent of any anchorage being used to support or suspend platforms and capable of supporting at least 5,000 pounds (22.2 kN) per employee attached, or must be designed, installed, and used as follows:

(i) As part of a complete personal fall arrest system which maintains a safety factor of at least two; and

(ii) Under the supervision of a qualified person.

(b) Positioning devices must be secured to an anchorage capable of supporting at least twice the potential impact load of an employee's fall or 3,000 pounds (13.3 kN), whichever is greater.

(c) Anchorages for personal fall arrest and positioning device systems.

(i) Personal fall arrest systems must be anchored to any apparently substantial part of the equipment unless a competent person, from a visual inspection, without an engineering analysis, would conclude that the criteria in (a) of this subsection would not be met.

(ii) Positioning device systems must be anchored to any apparently substantial part of the crane unless a competent person, from a visual inspection, without an engineering analysis, would conclude that the criteria in (b) of this subsection would not be met.

(iii) Attachable anchor devices (portable anchor devices that are attached to the crane) must meet the anchorage criteria in (a) of this subsection for personal fall arrest systems and (b) of this subsection for positioning device systems.

(8) **Anchorages for fall restraint systems**. Fall restraint systems must be anchored to any part of the crane that is capable of withstanding twice the maximum load that an employee may impose on it during reasonably anticipated conditions of use.

(9) **Tower cranes**.

(a) For work other than erecting, climbing, and dismantling, you must provide and ensure the use of fall protection equipment for employees who are on a walking/working surface with an unprotected side or edge more than 6 feet above a lower level.

> *Note: If the equipment is running and the employee is at or near the draw-works, precautions should be taken to ensure the fall protection gear will not become entangled.*

(b) For erecting, climbing, and dismantling work, you must provide and ensure the use of fall protection equipment for employees who are on a walking/working surface with an unprotected side or edge more than 10 feet above a lower level.

(10) **Anchoring to the load line**. A personal fall arrest system is permitted to be anchored to the crane/derrick's hook (or other part of the load line) where all of the following requirements are met:

(a) A qualified person has determined that the set-up and rated capacity of the crane/derrick (including the hook, load line and rigging) meets or exceeds the requirements in subsection (7)(a) of this section.

(b) The crane operator must be at the worksite and informed that the crane is being used for this purpose.

(c) No load is suspended from the load line when the personal fall arrest system is anchored to the crane/derrick's hook (or other part of the load line).

(11) **Training**. You must train each employee who may be exposed to fall hazards while on, or hoisted by, cranes/derricks covered by this section on all of the following:

(a) The requirements in this part that address fall protection.

(b) The applicable requirements in Parts C-1 and K of this chapter.

[Statutory Authority: RCW 49.17.010, .040, .050, and .060. 16-09-085 (Order 15-08), § 296-155-53403, filed 04/19/16, effective, 05/20/16. Statutory Authority: RCW 49.17.010, .004, .050, and .060. 13-02-068 (Order 12-14), § 296-155-53403, filed 12/31/12, effective 02/01/13. Statutory Authority: RCWs 47.17.010, 49.17.040, 49.17.050, 49.17.440 and 49.17.060. 12-01-086 (Order 08-32), § 296-155-53403, filed 12/20/11, effective 02/01/12.]

WAC 296-155-53404 Wire Rope.

(1) **Selection and installation criteria**.

(a) Original crane/derrick wire rope and replacement wire rope must be selected and installed in accordance with the requirements of this section. Selection of replacement wire rope must be in accordance with the recommendations of the wire rope manufacturer, the crane/derrick manufacturer, or a qualified person.

(b) Wire rope design criteria: Wire rope (other than rotation resistant rope) must comply with either Option (1) or Option (2) of this section, as follows:

(i) Option (1). Wire rope must comply with Section 5-1.7.1 of ASME B30.5-2007 except that section's paragraph (c) must not apply.

(ii) Option (2). Wire rope must be designed to have, in relation to the crane's/derrick's rated capacity, a sufficient minimum breaking force and design factor so that compliance with the applicable inspection provisions in this section will be an effective means of preventing sudden rope failure.

(c) Wire rope must be compatible with the safe functioning of the crane/derrick.

(d) Boom hoist reeving.

(i) Fiber core ropes must not be used for boom hoist or luffing attachment reeving, except for derricks.

(ii) Rotation resistant ropes must be used for boom hoist reeving only where the requirements of (e) of this subsection are met.

(e) Rotation resistant ropes.

(i) Definitions.

Type I rotation resistant wire rope (Type I). Type I rotation resistant rope is stranded rope constructed to have little or no tendency to rotate or, if guided, transmits little or no torque. It has at least 15 outer strands and comprises an assembly of at least 3 layers of strands laid helically over a center in two operations. The direction of lay of the outer strands is opposite to that of the underlying layer.

Type II rotation resistant wire rope (Type II). Type II rotation resistant rope is stranded rope constructed to have resistance to rotation. It has at least 10 outer strands and comprises an assembly of two or more layers of strands laid helically over a center in two or 3 operations. The direction of lay of the outer strands is opposite to that of the underlying layer.

Type III rotation resistant wire rope (Type III). Type III rotation resistant rope is stranded rope constructed to have limited resistance to rotation. It has no more than 9 outer strands, and comprises an assembly of two layers of strands laid helically over a center in two operations. The direction of lay of the outer strands is opposite to that of the underlying layer.

(ii) Requirements.

(A) Types II and III with an operation design factor of less than 5 must not be used for duty cycle or repetitive lifts.

(B) Rotation resistant ropes (including Types I, II and III) must have an operating design factor of no less than 3.5.

(C) Type I must have an operating design factor of no less than 5, except where the wire rope manufacturer and the crane/derrick manufacturer approves the design factor, in writing.

(D) Types II and III must have an operating design factor of no less than 5, except where the requirements of (e)(iii) of this subsection are met.

(iii) When Types II and III with an operation design factor of less than 5 are used (for nonduty cycle, nonrepetitive lifts), the following requirements must be met for each lifting operation:

(A) A qualified person must inspect the rope in accordance with subsection (2)(a) of this section. The rope must be used only if the qualified person determines that there are no deficiencies constituting a hazard. In making this determination, more than one broken wire in any one rope lay must be considered a hazard.

(B) Operations must be conducted in such a manner and at such speeds as to minimize dynamic effects.

(C) Each lift made under these provisions must be recorded in the monthly and annual inspection documents. Such prior uses must be considered by the qualified person in determining whether to use the rope again.

(iv) Additional requirements for rotation resistant ropes for boom hoist reeving.

(A) Rotation resistant ropes must not be used for boom hoist reeving, except where the requirements of (e)(iv)(B) of this subsection are met.

(B) Rotation resistant ropes may be used as boom hoist reeving when load hoists are used as boom hoists for attachments such as luffing attachments or boom and mast attachment systems. Under these conditions, all of the following requirements must be met:

(I) The drum must provide a first layer rope pitch diameter of not less than 18 times the nominal diameter of the rope used.

(II) The requirements in WAC 296-155-53400(44) (irrespective of the date of manufacture of the crane/derrick), and WAC 296-155-53400(45).

(III) The requirements of ANSI/ASME B30.5-2007, Section 5-1.3.2(a), (a)(2) through (a)(4), (b) and (d), except that the minimum pitch diameter for sheaves used in multiple rope reeving is 18 times the nominal diameter of the rope used instead of the value of 16 specified in Section 5-1.3.2(d).

(IV) All sheaves used in the boom hoist reeving system must have a rope pitch diameter of not less than 18 times the nominal diameter of the rope used.

(V) The operating design factor for the boom hoist reeving system must be not less than 5.

(VI) The operating design factor for these ropes must be the total minimum breaking force of all parts of rope in the system divided by the load imposed on the rope system when supporting the static weights of the structure and the load within the crane's/derrick's rated capacity.

(VII) When provided, a power-controlled lowering system must be capable of handling rated capacities and speeds as specified by the manufacturer.

(f) Wire rope clips used in conjunction with wedge sockets must be attached to the unloaded dead end of the rope only, except that the use of devices specifically designed for dead-ending rope in a wedge socket is permitted.

(g) Socketing must be done in the manner specified by the manufacturer of the wire rope or fitting.

(h) Prior to cutting a wire rope, seizings must be placed on each side of the point to be cut. The length and number of seizings must be in accordance with the wire rope manufacturer's instructions.

(2) **Inspection of wire ropes**.

(a) Shift inspection.

(i) A competent person must begin a visual inspection prior to each shift the crane/derrick is used, which must be completed before or during that shift. The inspection must consist of observation of accessible wire ropes (running and standing) that are likely to be in use during the shift for apparent deficiencies, including those listed in (a)(ii) of this subsection. Untwisting (opening) of wire rope or booming down is not required as part of this inspection.

(A) Category I. Apparent deficiencies in this category include the following:

(I) Distortion of the wire rope structure such as kinking, crushing, unstranding, birdcaging, signs of core failure or steel core protrusion between the outer strands.

(II) Corrosion.

(III) Electric arc damage (from a source other than power lines) or heat damage.

(IV) Improperly applied end connections.

(V) Corroded, cracked, bent, or worn end connections (such as from severe service).

(B) Category II. Apparent deficiencies in this category are:

(I) Visibly broken wires in running wire ropes: 6 randomly distributed broken wires in one rope lay or 3 broken wires in one strand in one rope lay, where a rope lay is the length along the rope in which one strand makes a complete revolution around the rope;

(II) Visibly broken wires in rotation resistant ropes: Two randomly distributed broken wires in 6 rope diameters or 4 randomly distributed broken wires in 30 rope diameters;

(III) Visibly broken wires in pendants or standing wire ropes: More than two broken wires in one rope lay located in rope beyond end connections and/or more than one broken wire at an end connection; and

(IV) A diameter reduction of more than 5% from nominal diameter.

(C) Category III. Apparent deficiencies in this category include the following:

(I) In rotation resistant wire rope, core protrusion or other distortion indicating core failure.

(II) Prior electrical contact with a power line.

(III) A broken strand.

(ii) Critical review items. The competent person must give particular attention to all of the following:

(A) Rotation resistant wire rope in use.

(B) Wire rope being used for boom hoists and luffing hoists, particularly at reverse bends.

(C) Wire rope at flange points, crossover points and repetitive pickup points on drums.

(D) Wire rope at or near terminal ends.

(E) Wire rope in contact with saddles, equalizer sheaves or other sheaves where rope travel is limited.

(iii) Removal from service.

(A) If a deficiency in Category I is identified, an immediate determination must be made by the competent person as to whether the deficiency constitutes a safety hazard. If the deficiency is determined to constitute a safety hazard, operations involving use of the wire rope in question must be prohibited until:

(I) The wire rope is replaced; or

(II) If the deficiency is localized, the problem is corrected by removing the damaged section of the wire rope; the undamaged portion may continue to be used. Joining lengths of wire rope by splicing is prohibited. If a rope is shortened under this subsection, you must ensure that the drum will still have two wraps of wire when the load and/or boom is in its lowest position.

(B) If a deficiency in Category II is identified, operations involving use of the wire rope in question must be prohibited until:

(I) You comply with the wire rope manufacturer's established criterion for removal from service or a different criterion that the wire rope manufacturer has approved in writing for that specific wire rope;

(II) The wire rope is replaced.

(C) If the deficiency is localized, the problem is corrected by severing the wire rope in two; the undamaged portion may continue to be used. Joining lengths of wire rope by splicing is prohibited. If a rope is shortened under this subsection, you must ensure that the drum will still have two wraps of wire when the load and/or boom is in its lowest position. If a deficiency in category III is identified, operations involving use of the wire rope in question must be prohibited until:

(I) The wire rope is replaced; or

(II) If the deficiency (other than power line contact) is localized, the problem is corrected by severing the wire rope in two; the undamaged portion may continue to be used. Joining lengths of wire rope by splicing is prohibited. Repair of wire rope that contacted an energized power line is also prohibited. If a rope is shortened under this subsection, you must ensure that the drum will still have two wraps of wire when the load and/or boom is in its lowest position.

(D) Where a wire rope is required to be removed from service under this section, either the crane/derrick (as a whole) or the hoist with that wire rope must be tagged-out, in accordance with WAC 296-155-53400(67), until the wire rope is repaired or replaced.

(b) Monthly inspection.

(i) Each month an inspection must be conducted in accordance with (a) of this subsection (shift inspection).

(ii) The inspection must include any deficiencies that the qualified person who conducts the annual inspection determines under (c)(iii) of this subsection must be monitored.

(iii) Wire ropes on a crane/derrick must not be used until an inspection under this subsection demonstrates that no corrective action under (a)(iii) of this subsection is required.

(iv) This inspection must be documented and be kept and made available upon request. Electronic records are acceptable.

(c) Annual/comprehensive, for cranes and derricks not covered by WAC 296-155-531 through 296-155-53214.

(i) At least every 12 months, wire ropes in use on the crane/derrick must be inspected by a qualified person in accordance with (a) of this subsection (shift inspection).

(ii) In addition, at least every 12 months, the wire ropes in use on the crane/derrick must be inspected by a qualified person, as follows:

(A) The inspection must be for deficiencies of the types listed in (a)(i)(B) of this subsection.

(B) The inspection must be complete and thorough, covering the surface of the entire length of the wire ropes, with particular attention given to all of the following:

(I) Critical review items listed in (a)(ii) of this subsection.

(II) Those sections that are normally hidden during shift and monthly inspections.

(III) Wire rope in contact with saddles, equalizer sheaves or other sheaves where rope travel is limited.

(IV) Wire rope subject to reverse bends.

(V) Wire rope passing over sheaves.

(VI) Wire rope at or near terminal ends.

(C) Exception: In the event an inspection under (c)(ii) of this subsection is not feasible due to existing set-up and configuration of the crane/derrick (such as where an assist crane is needed) or due to site conditions (such as a dense urban setting). The inspection must consist of observation of the working range plus 3 additional wraps (running and standing) prior to use.

(iii) If a deficiency is identified, an immediate determination must be made by the qualified person as to whether the deficiency constitutes a safety hazard.

(A) If the deficiency is determined to constitute a safety hazard, operations involving the use of the wire rope in question is prohibited until:

(I) The wire rope is replaced; or

(II) If the deficiency is localized, the problem is corrected by severing the wire rope in two; the undamaged portion may continue to be used. Joining lengths of wire rope by splicing is prohibited. If a rope is shortened under this subsection, you must ensure that the drum will still have two wraps of wire when the load and/or boom is in its lowest position.

(B) If the qualified person determines that, though not presently a safety hazard, the deficiency needs to be monitored, you must ensure that the deficiency is checked in the monthly inspections.

(iv) This inspection must be documented and be kept and made available upon request. Electronic records are acceptable.

(d) Rope lubricants that are of the type that hinder inspection must not be used.

(3) All documents produced under this section must be available, during the applicable document retention period, to all persons who conduct inspections under this section.

[Statutory Authority: RCW 49.17.010, .040, .050, and .060. 16-09-085 (Order 15-08), § 296-155-53404, filed 04/19/16, effective, 05/20/16. Statutory Authority: RCW 49.17.010, .004, .050, and .060. 13-02-068 (Order 12-14), § 296-155-53404, filed 12/31/12, effective 02/01/13. Statutory Authority: RCWs 47.17.010, 49.17.040, 49.17.050, 49.17.440 and 49.17.060. 12-01-086 (Order 08-32), § 296-155-53404, filed 12/20/11, effective 02/01/12.]

WAC 296-155-53405 Inspections.

(1) Cranes that have had modifications or additions as defined in WAC 296-155-53214 must be inspected by an accredited crane certifier after such modifications/additions have been completed, prior to initial use.

(2) **Repaired/adjusted equipment**.

(a) Cranes that have had significant repairs as defined in WAC 296-155-53214 must be inspected by an accredited crane certifier after such repairs have been completed, prior to initial use.

(b) Cranes that have had a repair or adjustment not defined in WAC 296-155-53214, that relates to safe operation (such as: A repair or adjustment to a safety device or operator aid, or to a critical part of a control system, power plant, braking system, load-sustaining structural components, load hook, or in-use operating mechanism), must be inspected by a qualified person after such a repair or adjustment has been completed, prior to initial use. The inspection must meet all of the following requirements:

(i) The qualified person must determine if the repair/adjustment meets manufacturer equipment criteria (where applicable and available).

(ii) Where manufacturer equipment criteria are unavailable or inapplicable, the qualified person must:

(A) Determine if a registered professional engineer (RPE) is needed to develop criteria for the repair/adjustment. If an RPE is not needed, you must ensure that the criteria are developed by the qualified person. If an RPE is needed, you must ensure that they are developed by an RPE.

(B) Determine if the repair/adjustment meets the criteria developed in accordance with (b)(ii)(A) of this subsection.

(iii) The inspection must include functional testing of the repaired/adjusted parts and other components that may be affected by the repair/adjustment.

(c) Equipment must not be used until an inspection under this section demonstrates that the repair/adjustment meets the requirements of (b)(i) of this subsection (or, where applicable, in (b)(ii) of this subsection).

(3) A competent person must begin a visual inspection prior to each shift the crane will be used, which must be completed before or during that shift. The inspection must consist of observation for apparent deficiencies. Taking apart equipment components and booming down is not required as part of this inspection unless the results of the visual inspection or trial operation indicate that further investigation necessitating taking apart crane components or booming down is needed. Determinations made in conducting the inspection must be reassessed in light of observations made during operation. At a minimum, the inspection must include all of the following:

(a) Control mechanisms for maladjustments interfering with proper operation;

(b) Control and drive mechanisms for apparent excessive wear of components and contamination by lubricants, water or other foreign matter;

(c) Air, hydraulic, and other pressurized lines for deterioration or leakage, particularly those which flex in normal operation;

(d) Hydraulic system for proper fluid level;

(e) Hooks and latches for deformation, cracks, excessive wear, or damage such as from chemicals or heat;

(f) Wire rope reeving for compliance with the manufacturer's specifications;

(g) Wire rope, in accordance with WAC 296-155-53404;

(h) Electrical apparatus for malfunctioning, signs of apparent excessive deterioration, dirt or moisture accumulation;

(i) Tires (when in use) for proper inflation and condition;

(j) Ground conditions around the equipment for proper support, including ground settling under and around outriggers/stabilizers and supporting foundations, groundwater accumulation, or similar conditions. This subsection does not apply to the inspection of ground conditions for railroad tracks and their underlying support when the railroad tracks are part of the general railroad system of transportation that is regulated pursuant to the Federal Railroad Administration under 49 C.F.R., Part 213;

(k) The crane for level position within the tolerances specified by the crane manufacturer's recommendations, both before each shift and after each move and setup;

(l) Operator cab windows for significant cracks, breaks, or other deficiencies that would hamper the operator's view;

(m) Rails, rail stops, rail clamps and supporting surfaces when the crane has rail traveling. This subsection does not apply to the inspection of rails, rail stops, rail clamps and supporting surfaces when the railroad tracks are part of the general railroad system of transportation that is regulated pursuant to the Federal Railroad Administration under 49 C.F.R., Part 213;

(n) Safety devices and operational aids for proper operation;

(o) Derricks must have guys inspected for proper tension.

(4) You must keep monthly inspection records (see items listed in subsection (3) of this section). These inspection records must be kept for at least 3 months. This report must contain the following information:

(a) The items checked and the results of the inspection;

(b) The name and signature of the person who conducted the inspection and the date.

(5) If any deficiency is found during the inspection, an immediate determination must be made by the competent person as to whether the deficiency constitutes a safety hazard. If the deficiency is determined to constitute a safety hazard, the equipment must be taken out of service until it has been corrected and approved by a qualified person.

(6) If any deficiency in safety devices/operational aids is identified, the action specified in WAC 296-155-53410 and 296-155-53412 must be taken prior to using the equipment.

(7) If any deficiency is identified, an immediate determination must be made by a qualified person as to whether the deficiency constitutes a safety hazard.

(a) If a qualified person determines that a deficiency is a safety hazard, the crane must be taken out of service until it has been corrected, evaluated, and approved by a qualified person, except when temporary alternative measures are implemented as allowed in WAC 296-155-53412 and for tower cranes see WAC 296-155-54100(61).

(b) If a qualified person determines that, though not presently a safety hazard, the deficiency needs to be monitored, you must ensure that the deficiency is checked in the monthly inspections.

(8) **Severe service**. Where the severity of use/conditions is such that there is a reasonable probability of damage or excessive wear (such as loading that may have exceeded rated capacity, shock loading that may have exceeded rated capacity, prolonged exposure to a corrosive atmosphere), you must stop using the crane and a qualified person must:

(a) Inspect the crane for structural damage to determine if the crane can continue to be used safely.

(b) In light of the use/conditions determine whether any items/conditions listed in subsection (7) of this section need to be inspected; if so, the qualified person must inspect those items/conditions.

(c) If a deficiency is found, you must follow the requirements in subsection (7)(a) of this section.

(9) **Cranes not in regular use**. Cranes that have been idle for 3 months or more must be inspected by a qualified person in accordance with the requirements of subsection (3) of this section before initial use.

(10) Any part of a manufacturer's procedures regarding inspections that relate to safe operation (such as to a safety device or operational aid, critical part of a control system, power plant, braking system, load-sustaining structural components, load hook, or in-use operating mechanism) that is more comprehensive or has a more frequent schedule of inspection than the requirements of this section must be followed.

(11) All documents produced under this section must be available, during the applicable document retention period, to all persons who conduct inspections under this section.

[Statutory Authority: RCW 49.17.010, .040, .050, and .060. 16-09-085 (Order 15-08), § 296-155-53405, filed 04/19/16, effective, 05/20/16. Statutory Authority: RCWs 47.17.010, 49.17.040, 49.17.050, 49.17.440 and 49.17.060. 12-01-086 (Order 08-32), § 296-155-53405, filed 12/20/11, effective 02/01/12.]

WAC 296-155-53406 Signals.

(1) A qualified signal person that meets the requirements in WAC 296-155-53302 must be provided in each of the following situations:

(a) The point of operation, meaning the load travel or the area near or at load placement, is not in full view of the crane/derrick operator.

(b) When the crane is traveling, the view in the direction of travel is obstructed.

(c) Due to site specific safety concerns, either the crane/derrick operator or the person handling the load determines that it is necessary.

(2) **Types of signals**. Signals to crane/derrick operators must be by hand, voice, audible, or other means at least as effective.

(3) **Hand signals**.

(a) When using hand signals, the standard method as established in the applicable ASME B30 standards must be used. Where use of the standard method for hand signals is infeasible, or where an operation or use of an attachment is not covered in the standard method, nonstandard hand signals may be used in accordance with (b) of this subsection.

Note: See WAC 296-155-56400 for the hand signal chart.

(b) Nonstandard hand signals. When using nonstandard hand signals, the signal person, operator, and lift director must contact each other prior to the operation and agree on the nonstandard hand signals that will be used.

(4) Signals other than hand, voice or audible signals may be used where you demonstrate that the signals provided are at least equally effective communications as voice, audible, or standard method hand signals.

(5) **Use and suitability**.

(a) Prior to beginning operations, the operator, signal person, and lift director, must contact each other and agree on the voice signals that will be used. Once the voice signals are agreed upon, these employees need not meet again to discuss voice signals unless another employee is added or substituted, there is confusion about the voice signals, or a voice signal is to be changed.

(b) Each voice signal must contain the following 3 elements, given in the following order: Function (such as hoist, boom, etc.) and direction; distance and/or speed; function stop.

(c) The operator, signal person and lift director, must be able to effectively communicate in the language used.

(d) The signals used (hand, voice, audible, or other effective means), and means of transmitting the signals to the operator (such as direct line of sight, video, radio, etc.) must be appropriate for the site conditions.

(e) Signals must be discernible or audible at all times. The crane operator must not respond unless signals are clearly understood.

(6) During operations requiring signals, the ability to transmit signals between the operator and signal person must be maintained. If that ability is interrupted at any time, the operator must safely stop operations requiring signals until it is reestablished and a proper signal is given and understood.

(7) If the operator becomes aware of a safety problem and needs to communicate with the signal person, the operator must safely stop operations. Operations must not resume until the operator and signal person agree that the problem has been resolved.

(8) Only one person gives signals to a crane/derrick at a time, except in circumstances covered by subsection (9) of this section.

(9) Anyone who becomes aware of a safety problem must alert the operator or signal person by giving the stop or emergency stop signal. The operator must obey a stop (or emergency stop) signal, irrespective of who gives it.

(10) All directions given to the operator by the signal person must be given from the operator's direction perspective.

(11) **Communication with multiple cranes/derricks**. Where a signal person(s) is in communication with more than one crane/derrick, a system for identifying the crane/derrick for which each signal is intended must be used, as follows:

(a) For each signal, prior to giving the function/direction, the signal person must identify the crane/derrick for which the signal is intended; or

(b) An equally effective method of identifying which crane/derrick the signal is intended for must be used.

(12) **Hand signal chart**. Hand signal charts must be either posted on the crane/derrick or conspicuously posted in the vicinity of the hoisting operations.

(13) **Radio, telephone or other electronic transmission of signals**.

(a) The device(s) used to transmit signals must be tested on site before beginning operations to ensure that the signal transmission is effective, clear, and reliable.

(b) Signal transmission must be through a dedicated channel except:

(i) Multiple cranes/derricks and one or more signal persons may share a dedicated channel for the purpose of coordinating operations.

(ii) Where a crane is being operated on or adjacent to railroad tracks, and the actions of the crane operator need to be coordinated with the movement of other equipment or trains on the same or adjacent tracks.

(c) The operator's reception of signals must be made by a hands-free system.

[Statutory Authority: RCW 49.17.010, .040, .050, and .060. 16-09-085 (Order 15-08), § 296-155-53406, filed 04/19/16, effective, 05/20/16. Statutory Authority: RCW 49.17.010, .004, .050, and .060. 13-02-068 (Order 12-14), § 296-155-53406, filed 12/31/12, effective 02/01/13. Statutory Authority: RCWs 47.17.010, 49.17.040, 49.17.050, 49.17.440 and 49.17.060. 12-01-086 (Order 08-32), § 296-155-53406, filed 12/20/11, effective 02/01/12.]

WAC 296-155-53408 Power line safety

(1) **Assembly and disassembly of crane/derrick**.

(a) Before assembling or disassembling crane/derrick, you must determine if any part of the crane/derrick, load line or load (including rigging and lifting accessories) could get, in the direction or area of assembly, closer than 20 feet of a power line that is up to 350 kV or closer than 50 feet of a power line that exceeds 350 kV during the assembly/disassembly process. If so, you must meet the requirements in Option (1), Option (2), or Option (3), as follows:

(i) Option (1) - Deenergize and ground. Confirm from the utility owner/operator that the power line has been deenergized and visibly grounded at the worksite.

(ii) Option (2) - Clearance. Ensure that no part of the crane/derrick, load line or load (including rigging and lifting accessories), gets closer than 20 feet of a power line that is up to 350 kV or closer than 50 feet of a power line that exceeds 350 kV by implementing the measures specified in (b) of this subsection.

(iii) Option (3) - Table 4 clearance.

(A) Determine the line's voltage and the minimum approach distance permitted under Table 4 of this section.

(B) Determine if any part of the crane/derrick, load line or load (including rigging and lifting accessories), could get closer than the minimum approach distance of the power line permitted under Table 4 of this section. If so, then you must follow the requirements in (b) of this subsection to ensure that no part of the crane/derrick, load line, or load (including rigging and lifting accessories), gets closer to the line than the minimum approach distance.

(b) Preventing encroachment/electrocution. Where encroachment precautions are required under Option (2), or Option (3), all of the following requirements must be met:

(i) Conduct a planning meeting with the assembly/disassembly director, operator, assembly/disassembly crew and the other workers who will be in the assembly/disassembly area to review the location of the power line(s) and the steps that will be implemented to prevent encroachment/electrocution.

(ii) If tag lines are used, they must be nonconductive.

(iii) At least one of the following additional measures must be in place. The measure selected from this list must be effective in preventing encroachment. The additional measures are:

(A) Use a dedicated spotter who is in continuous contact with the crane/derrick operator, plus an elevated warning line, barricade, or line of signs, in view of the spotter, equipped with flags or similar high-visibility markings. The dedicated spotter must:

(I) Be equipped with a visual aid to assist in identifying the minimum clearance distance. Examples of a visual aid include: A clearly visible line painted on the ground; a clearly visible line on stanchions; a set of clearly visible line-of-sight landmarks (such as a fence post behind the dedicated spotter and a building corner ahead of the dedicated spotter).

(II) Be positioned to effectively gauge the clearance distance.

(III) Where necessary, use equipment that enables the dedicated spotter to communicate directly with the operator, in accordance with WAC 296-155-53406(13) (radio, telephone, or other electronic transmission of signals).

(IV) Give timely information to the operator so that the required clearance distance can be maintained.

Note: To be considered a dedicated spotter, the requirements of WAC 296-155-53302 (Signal person qualifications) must be met and his/her sole responsibility is to watch the separation between the power line and the equipment, the load line and load (including rigging and lifting accessories), and ensure through communication with the operator that the applicable minimum approach distance is not breached.

(B) A proximity alarm set to give the operator sufficient warning to prevent encroachment.

(C) A device that automatically warns the operator when to stop movement, such as a range control warning device. Such a device must be set to give the operator sufficient warning to prevent encroachment.

(D) A device that automatically limits range of movement, set to prevent encroachment.

(c) Assembly/disassembly below power lines is prohibited. No part of a crane/derrick, load line or load (including rigging and lifting accessories), whether partially or fully assembled, is allowed below a power line unless you have confirmed that the utility owner/operator has deenergized and (at the worksite) visibly grounded the power line.

(d) Assembly/disassembly inside Table 4 clearance is prohibited. No part of a crane/derrick, load line or load (including rigging and lifting accessories), whether partially or fully assembled, is allowed closer than the minimum approach distance under Table 4 of a power line unless you have confirmed that the utility owner/operator has deenergized and (at the worksite) visibly grounded the power line.

(e) Voltage information. Where Option (3) is used, the utility owner/operator of power lines must provide the requested voltage information prior to commencement of work or within two working days of your request.

(f) Power lines presumed energized. You must assume that all power lines are energized unless the utility owner/operator confirms that the power line has been and continues to be deenergized and visibly grounded at the worksite.

(g) Posting of electrocution warnings. There must be at least one electrocution hazard warning conspicuously posted in the cab so that it is in view of the operator and (except for overhead gantry and tower cranes) at least two on the outside of the crane/derrick.

(2) **Operation of crane/derrick**.

(a) Hazard assessments and precautions inside the work zone. Before beginning crane/derrick operations, you must:

(i) Identify the work zone.

(A) Define a work zone by demarcating boundaries (such as with flags, or a device such as a range limit device or range control warning device) and prohibiting the operator from operating the crane/derrick past those boundaries; or

(B) Define the work zone as the area 360 degrees around the crane/derrick, up to its maximum working radius.

(ii) Determine if any part of the crane/derrick, load line or load (including rigging and lifting accessories), if operated up to its maximum working radius in the work zone, could get closer than 20 feet of a power line that is up to 350 kV or closer than 50 feet of a power line that exceeds 350 kV. If so, you must meet the requirements in Option (1), Option (2), or Option (3) as follows:

(A) Option (1) - Deenergize and ground. Confirm from the utility owner/operator that the power line has been deenergized and visibly grounded at the worksite.

(B) Option (2) - 20-foot clearance. Ensure that no part of the crane/derrick, load line, or load (including rigging and lifting accessories), gets closer than 20 feet to the power line by implementing the measures specified in (b) of this subsection.

(C) Option (3) - Table 4 clearance.

(I) Determine the line's voltage and the minimum approach distance permitted under Table 4 of this section.

(II) Determine if any part of the crane/derrick, load line or load (including rigging and lifting accessories), while operating up to its maximum working radius in the work zone, could get closer than the minimum approach distance of the power line permitted under Table 4 of this section. If so, then you must follow the requirements in (b) of this subsection to ensure that no part of the crane/derrick, load line, or load (including rigging and lifting accessories), gets closer to the line than the minimum approach distance.

(b) Preventing encroachment/electrocution. Where encroachment precautions are required under Option (2) or Option (3), all of the following requirements must be met:

(i) Conduct a planning meeting with the operator and the other workers who will be in the area of the crane/derrick or load to review the location of the power line(s), and the steps that will be implemented to prevent encroachment/electrocution.

(ii) If tag lines are used, they must be nonconductive.

(iii) Erect and maintain an elevated warning line, barricade, or line of signs, in view of the operator, equipped with flags or similar high-visibility markings, at 20 feet from a power line that is up to 350 kV or 50 feet from a power line that exceeds 350 kV (if using Option (2)) or at the minimum approach distance under Table 4 of this section (if using Option (3)). If the operator is unable to

see the elevated warning line, a dedicated spotter must be used as described in (iv)(B) of this subsection in addition to implementing one of the measures described in (b)(i), (iii) through (v) of this subsection.

(iv) Implement at least one of the following measures:

(A) A proximity alarm set to give the operator sufficient warning to prevent encroachment.

(B) Use a dedicated spotter who is in continuous contact with the crane/derrick operator, plus an elevated warning line, barricade, or line of signs, in view of the spotter, equipped with flags or similar high-visibility markings. The dedicated spotter must:

(I) Be equipped with a visual aid to assist in identifying the minimum clearance distance. Examples of a visual aid include: A clearly visible line painted on the ground; a clearly visible line on stanchions; a set of clearly visible line-of-sight landmarks (such as a fence post behind the dedicated spotter and a building corner ahead of the dedicated spotter).

(II) Be positioned to effectively gauge the clearance distance.

(III) Where necessary, use equipment that enables the dedicated spotter to communicate directly with the operator.

(IV) Give timely information to the operator so that the required clearance distance can be maintained.

Note: To be considered a dedicated spotter, the requirements of WAC 296-155-53302 (Signal person qualifications) must be met and his/her sole responsibility is to watch the separation between the power line and the equipment, the load line and load (including rigging and lifting accessories), and ensure through communication with the operator that the applicable minimum approach distance is not breached.

(C) A device that automatically warns the operator when to stop movement, such as a range control warning device. Such a device must be set to give the operator sufficient warning to prevent encroachment.

(D) A device that automatically limits range of movement, set to prevent encroachment.

(E) An insulating link/device, as defined in WAC 296-155-52902, installed at a point between the end of the load line (or below) and the load.

(v) The requirements of (b)(iv) of this subsection do not apply to work covered by chapter 296-45 WAC.

(c) Voltage information. Where Option (3) is used, the utility owner/operator of power lines must provide the requested voltage information prior to commencement of work or within two working days of your request.

(d) Operations below power lines.

(i) No part of the crane/derrick, load line or load (including rigging and lifting accessories) is allowed below a power line unless you have confirmed that the utility owner/operator has deenergized and (at the worksite) visibly grounded the power line, except where one of the exceptions in (d)(ii) of this subsection apply.

(ii) Exceptions (d)(i) of this subsection is inapplicable where you demonstrate that one of the following applies:

(A) The work is covered by chapter 296-45 WAC.

(B) For cranes/derricks with nonextensible booms: The uppermost part of the crane/derrick, with the boom at true vertical, would be more than 20 feet below the plane of a power line that is up to 350 kV, 50 feet below the plane of a power line that exceeds 350 kV or more than the Table 4 minimum clearance distance below the plane of the power line.

(C) For cranes with articulating or extensible booms: The uppermost part of the crane, with the boom in the fully extended position, at true vertical, would be more than 20 feet below the plane of a power line that is up to 350 kV, 50 feet below the plane of a power line that exceeds 350 kV or more than the Table 4 minimum clearance distance below the plane of the power line.

(D) Compliance with (d)(i) of this subsection is infeasible and meets the requirements of subsection (4) of this section.

(e) Power lines presumed energized. You must assume that all power lines are energized unless the utility owner/operator confirms that the power line has been and continues to be deenergized and visibly grounded at the worksite.

(f) Training.

(i) You must train each operator and crew member assigned to work with the crane/derrick on all the following:

(A) The procedures to be followed in the event of electrical contact with a power line. Such training must include:

(I) Information regarding the danger of electrocution from the operator simultaneously touching the crane/derrick and the ground.

(II) The importance to the operator's safety of remaining inside the cab except where there is an imminent danger of fire, explosion, or other emergency that necessitates leaving the cab.

(III) The safest means of evacuating from the crane/derrick that may be energized.

(IV) The danger of the potentially energized zone around the crane/derrick (step potential).

(V) The need for crew in the area to avoid approaching or touching the crane/derrick and the load.

(VI) Safe clearance distance from power lines.

(B) Power lines are presumed to be energized unless the utility owner/operator confirms that the power line has been and continues to be deenergized, and visibly grounded at the worksite.

(C) Power lines are presumed to be uninsulated unless the utility owner/operator or a registered engineer who is a qualified person with respect to electrical power transmission and distribution confirms that a power line is insulated.

(D) The limitations of an insulating link/device, proximity alarm, and range control (and similar) device, if used.

(E) The procedures to be followed to properly ground equipment and the limitations of grounding.

(ii) Employees working as dedicated spotters must be trained to enable them to effectively perform their task, including training on the applicable requirements of this section.

(iii) Training under this section must be administered in accordance with WAC 296-155-53409(2).

(g) Devices originally designed by the manufacturer for use as: A safety device (see WAC 296-155-53410), operational aid (see WAC 296-155-53412), or a means to prevent power line contact or electrocution, when used to comply with this section, must meet the manufacturer's procedures for use and conditions of use.

(3) Prior to working near a transmitter/communication tower where an electrical charge can be induced in the crane/derrick or materials being handled, the transmitter must be deenergized or the following precautions must be taken:

(a) The crane/derrick must be provided with an electrical ground directly to the crane/derrick frame;

(b) Ground jumper cables must be attached to materials being handled by boom equipment when electrical charge is induced while working near energized transmitters. Crews must be provided with nonconductive poles having large alligator clips or other similar protection to attach the ground cable to the load;

(c) Combustible and flammable materials must be removed from the immediate area prior to operations; and

(d) If tag lines are used, they must be nonconductive.

(4) **Operation of the crane/derrick inside the Table 4 zone**. Operations in which any part of the crane/derrick, load line or load (including rigging and lifting accessories) is either closer than the minimum approach distance under Table 4 of an energized power line or the power line voltage is undetermined and the crane/derrick load line or load is within 20 feet from the power line is prohibited, except where you demonstrate that all of the following requirements are met:

(a) Notify the crane safety program within the department of labor and industries.

(b) You determine that it is infeasible to do the work without breaching the minimum approach distance under Table 4 of this section.

(c) You determine that, after consultation with the utility owner/operator, it is infeasible to deenergize and ground the power line or relocate the power line.

(d) Minimum clearance distance.

(i) The power line owner/operator or registered professional engineer who is a qualified person with respect to electrical power transmission and distribution determines the minimum clearance distance that must be maintained to prevent electrical contact in light of the on-site conditions. The factors that must be considered in making this determination include, but are not limited to: Conditions affecting atmospheric conductivity; time necessary to bring the crane/derrick, load line and load (including rigging and lifting accessories) to a complete stop; wind conditions; degree of sway in the power line; lighting conditions, and other conditions affecting the ability to prevent electrical contact.

(ii) Subsection (4)(d)(i) of this section does not apply to work covered by chapter 296-45 WAC; instead, for such work, the minimum clearance distances specified in chapter 296-45 WAC, Table 1 apply. Employers covered by chapter 296-45 WAC are permitted to work closer than the distances in chapter 296-45 WAC, Table 1, where both the requirements of this rule and WAC 296-45-375(10) are met.

(e) A planning meeting with the employer and utility owner/operator (or registered professional engineer who is a qualified person with respect to electrical power transmission and distribution) is held to determine the procedures that will be followed to prevent electrical contact and electrocution. At a minimum these procedures must include:

(i) If the power line is equipped with a device that automatically reenergizes the circuit in the event of a power line contact, before the work begins, the automatic reclosing feature of the circuit interrupting device must be made inoperative if the design of the device permits.

(ii) A dedicated spotter who is in continuous contact with the operator. The dedicated spotter must:

(A) Be equipped with a visual aid to assist in identifying the minimum clearance distance. Examples of a visual aid include, but are not limited to: A clearly visible line painted on the ground; a clearly visible line on stanchions; a set of clearly visible line-of-sight landmarks (such as a fence post behind the dedicated spotter and a building corner ahead of the dedicated spotter).

(B) Be positioned to effectively gauge the clearance distance.

(C) Where necessary, use equipment that enables the dedicated spotter to communicate directly with the operator.

(D) Give timely information to the operator so that the required clearance distance can be maintained.

Note: To be considered a dedicated spotter, the requirements of WAC 296-155-53302 (Signal person qualifications) must be met and his/her sole responsibility is to watch the separation between the power line and the equipment, the load line and load (including rigging and lifting accessories), and ensure through communication with the operator that the applicable minimum approach distance is not breached.

(iii) An elevated warning line, or barricade (not attached to the crane), in view of the operator (either directly or through video equipment), equipped with flags or similar high-visibility markings, to prevent electrical contact. However, this provision does not apply to work covered by chapter 296-45 WAC.

(iv) Insulating link/device.

(A) An insulating link/device installed at a point between the end of the load line (or below) and the load.

(B) For work covered by chapter 296-45 WAC, the requirement in (e)(iv)(A) of this subsection applies only when working inside the clearance distances of Table 1 in chapter 296-45 WAC.

(C) For work covered by chapter 296-45 WAC, electrical workers, involving operations where use of an insulating link/device is infeasible, the requirements of WAC 296-45-375 (10)(c)(ii) or (iii) may be substituted for the requirement in (e)(iv)(A) of this subsection.

(v) Until one year after the effective date of this part, the following procedure may be substituted for the requirement in (e)(iv)(A) of this subsection: All employees, excluding equipment operators located on the equipment, who may come in contact with the equipment, the load line, or the load must be insulated or guarded from the equipment, the load line, and the load. Insulating gloves rated for the voltage involved are adequate insulation for the purposes of this section.

(vi) Until 3 years after the effective date of this part the following procedure may be substituted for the requirement in (e)(iv)(A) of this subsection:

(A) You must use a link/device manufactured on or before one year after the effective date of this part that meets the definition of an insulating link/device, except that it has not been approved by a nationally recognized testing laboratory, and that is maintained and used in accordance with manufacturer requirements and recommendations, and is installed at a point between the end of the load line (or below) and the load; and

(B) All employees, excluding equipment operators located on the equipment, who may come in contact with the equipment, the load line, or the load must be insulated or guarded from the equipment, the load line, and the load through an additional means other than the device described in (e)(vi)(A) of this subsection. Insulating gloves rated for the voltage involved are adequate additional means of protection for the purposes of this section.

(vii) Use nonconductive rigging if the rigging may be within the Table 4 distance during the operation.

(viii) If the crane/derrick is equipped with a device that automatically limits range of movement, it must be used and set to prevent any part of the crane/derrick, load line or load (including rigging and lifting accessories) from breaching the minimum approach distance established under (d) of this subsection.

(ix) If a tag line is used, it must be of the nonconductive type.

(x) Barricades forming a perimeter at least 10 feet away from the crane/derrick to prevent unauthorized personnel from entering the work area. In areas where obstacles prevent the barricade from being at least 10 feet away, the barricade must be as far from the crane/derrick as feasible.

(xi) Workers other than the operator must be prohibited from touching the load line above the insulating link/device and crane. Operators remotely operating the equipment from the ground must use either wireless controls that isolate the operator from the equipment or insulating mats that insulate the operator from the ground.

(xii) Only personnel essential to the operation are permitted to be in the area of the crane and load.

(xiii) The crane/derrick must be properly grounded.

(xiv) Insulating line hose or cover-up must be installed by the utility owner/operator except where such devices are unavailable for the line voltages involved.

(f) The procedures developed to comply with (e) of this subsection are documented and immediately available on-site.

(g) The crane/derrick user and utility owner/operator (or registered professional engineer) meet with the operator and the other workers who will be in the area of the crane/derrick or load to review the procedures that will be implemented to prevent breaching the minimum approach distance established in (d) of this subsection and prevent electrocution.

(h) The procedures developed to comply with (e) of this subsection are implemented.

(i) The utility owner/operator (or registered professional engineer) and all employers of employees involved in the work must identify one person who will direct the implementation of the procedures. The person identified in accordance with this section must direct the implementation of the procedures and must have the authority to stop work at any time to ensure safety.

(j) If a problem occurs implementing the procedures being used to comply with (e) of this subsection, or indicating that those procedures are inadequate to prevent electrocution, you must safely stop operations and either develop new procedures to comply with (e) of this subsection or have the utility owner/operator deenergize and visibly ground or relocate the power line before resuming work.

(k) Devices originally designed by the manufacturer for use as: Safety devices (see WAC 296-155-53410), operational aids (see WAC 296-155-53412), or a means to prevent power line contact or electrocution, when used to comply with this section, must meet the manufacturer's procedures for use and conditions of use.

(l) You must train each operator and crew member assigned to work with the equipment in accordance with subsection (2)(f) of this section.

(5) **Cranes while traveling**.

(a) This section establishes procedures and criteria that must be met for cranes traveling under a power line on the construction site with no load. Equipment traveling on a construction site with a load is governed by subsections (2), (4), (6), and (7) of this section, whichever is appropriate, and WAC 296-155-53400(35).

(b) You must ensure that:

(i) The boom/mast and boom/mast support system are lowered sufficiently to meet the requirements of this section.

(ii) The clearances specified in Table 5 of this section are maintained.

(iii) The effects of speed and terrain on crane movement (including movement of the boom/mast) are considered so that those effects do not cause the minimum clearance distances specified in Table 5 of this section to be breached.

(iv) Dedicated spotter. If any part of the crane while traveling will get closer than 20 feet of the power line, you must ensure that a dedicated spotter who is in continuous contact with the driver/operator is used. The dedicated spotter must:

(A) Be positioned to effectively gauge the clearance distance.

(B) Where necessary, use equipment that enables the dedicated spotter to communicate directly with the operator.

(C) Give timely information to the operator so that the required clearance distance can be maintained.

Note: To be considered a dedicated spotter, the requirements of WAC 296-155-53302 (Signal person qualifications) must be met and his/her sole responsibility is to watch the separation between the power line and the equipment, the load line and load (including rigging and lifting accessories), and ensure through communication with the operator that the applicable minimum approach distance is not breached.

(v) Additional precautions for traveling in poor visibility. When traveling at night, or in conditions of poor visibility, in addition to the measures specified in (b)(i) through (iv) of this subsection, you must ensure that:

(A) The power lines are illuminated or another means of identifying the location of the lines must be used.

(B) A safe path of travel is identified and used.

(6) The requirements of subsections (1) and (2) of this section apply to power lines over 350 kV, and below 1000 kV except that wherever the distance "20 feet" is specified, the distance "50 feet" must be substituted.

(7) For power lines over 1000 kV, the minimum clearance distance must be established by the utility owner/operator or a registered professional engineer who is a qualified person with respect to power transmission and distribution.

Table 4--Minimum Clearance Distances

Voltage (nominal, kV)	Minimum clearance distance (feet)
Up to 50	10
Over 50 to 200	15
Over 200 to 345	20
Over 345 to 500	25
Over 500 TO 750	35
Over 750 to 1,000	45
Over 1000	(As established by the utility owner/operator or registered professional engineer who is a qualified person with respect to electrical power transmission and distribution).

Note: The value that follows "to" is up to and includes that value.

Table 5 Minimum Clearance Distances While Traveling With No Load and Boom/Mast Lowered	
Voltage (nominal, kV)	**While traveling--minimum clearance distance (feet)**
Up to 0.75	4 (while traveling/boom lowered).
Over .75 to 50	6 (while traveling/boom lowered).
Over 50 to 345	10 (while traveling/boom lowered).
Over 345 to 750	16 (while traveling/boom lowered).
Over 750 to 1,000	20 (while traveling/boom lowered).
Over 1,000	(As established by the utility owner/operator or registered professional engineer who is a qualified person with respect to electrical power transmission and distribution)

[Statutory Authority: RCW 49.17.010, .040, .050, and .060. 16-09-085 (Order 15-08), § 296-155-53408, filed 04/19/16, effective, 05/20/16. Statutory Authority: RCW 49.17.010, .004, .050, and .060. 13-02-068 (Order 12-14), § 296-155-53408, filed 12/31/12, effective 02/01/13. Statutory Authority: RCWs 47.17.010, 49.17.040, 49.17.050, 49.17.440 and 49.17.060. 12-01-086 (Order 08-32), § 296-155-53408, filed 12/20/11, effective 02/01/12.

WAC 296-155-53409 Training.

(1) **You must provide training as follows**:

(a) Overhead power lines. You must ensure that each employee is trained in accordance with WAC 296-155-53408 (2)(g) and 296-155-53408 (4)(k) in the topics listed in WAC 296-155-53408 (2)(f).

(b) Qualified signal persons. You must ensure that each employee is trained who will be assigned to work as a signal person in accordance with the requirements of WAC 296-155-53302(3).

(c) Qualified rigger. You must ensure that each employee is trained who will be assigned to work as a rigger in accordance with the requirements of WAC 296-155-53306(3).

(d) Operators.

(i) Trainee/apprentice operator. You must ensure that each trainee/apprentice operator is trained in the areas addressed in WAC 296-155-53300 and 296-155-56420.

(ii) Operator. Operators who have met the requirements in WAC 296-155-53300 and 296-155-56420 will be considered trained.

(iii) For operators using equipment covered under this part that are exempt in WAC 296-155-52900(3)(b), you must ensure that each operator is trained on the safe operation of the equipment the operator will be using.

(e) You must train each operator of the equipment covered by this part in the following practices:

(i) On friction equipment, whenever moving a boom off a support, first raise the boom a short distance (sufficient to take the load of the boom) to determine if the boom hoist brake needs to be adjusted. On other types of equipment with a boom, the same practice is applicable, except that typically there is no means of adjusting the brake; if the brake does not hold, a repair is necessary. See WAC 296-155-53400 (68) and (69).

(ii) Where available, the manufacturer's emergency procedures for halting unintended equipment movement.

(f) Competent persons and qualified persons. You must ensure that each competent person and each qualified person is trained regarding the requirements of this part applicable to their respective roles.

(g) Crush/pinch points. You must ensure that each employee is trained who works with the equipment to keep clear of holes, and crush/pinch points and the hazards addressed in WAC 296-155-53400(42) (work area control).

(h) Tag-out. You must ensure that each operator and each additional employee authorized to start/energize equipment or operate equipment controls (such as maintenance and repair employees) is trained, in the tag-out and start-up procedures in WAC 296-155-53400 (16) and (67).

(2) **Training administration**.

(a) You must evaluate each employee required to be trained under this part to confirm that the employee understands the information provided in the training.

(b) You must ensure that refresher training is provided in relevant topics for each employee when, based on the conduct of the employee or an evaluation of the employee's knowledge, there is an indication that retraining is necessary.

(c) Whenever you are required to provide training under this part, you must provide the training at no cost to the employee.

[Statutory Authority: RCW 49.17.010, .040, .050, and .060. 16-09-085 (Order 15-08), § 296-155-53409, filed 04/19/16, effective, 05/20/16. Statutory Authority: RCW 49.17.010, .004, .050, and .060. 13-02-068 (Order 12-14), § 296-155-53409, filed 12/31/12, effective 02/01/13. Statutory Authority: RCWs 47.17.010, 49.17.040, 49.17.050, 49.17.440 and 49.17.060. 12-01-086 (Order 08-32), § 296-155-53409, filed 12/20/11, effective 02/01/12.]

WAC 296-155-53410 Safety Devices.

(1) **Safety devices**. The following safety devices are required on all cranes/derricks, except tower cranes and self-erecting tower cranes, covered by this part, unless otherwise specified. For requirements relating to operational aids and safety devices for tower cranes, see WAC 296-155-53900 (60) and (61), for self-erecting tower cranes see WAC 296-155-54100 (42) and (43).

(a) Crane level indicator.

(i) The crane must have a level indicator that is either built into the crane or is available on the crane.

(ii) If a built-in crane level indicator is not working properly, it must be tagged-out or removed. If a removable crane level indicator is not working properly, it must be removed.

(iii) This requirement does not apply to articulating cranes, portal cranes, derricks, floating cranes/derricks and land cranes/derricks on barges, pontoons, vessels or other means of flotation.

(b) Boom stops, except for derricks and hydraulic booms.

(c) Jib stops (if a jib is attached), except for derricks.

(d) Cranes with foot pedal brakes must have locks, except for portal cranes and floating cranes.

(e) Hydraulic outrigger jacks and hydraulic stabilizer jacks must have an integral holding device/check valve.

(f) Cranes on rails must have rail clamps and rail stops, except for portal cranes.

(g) Horn.

(i) The crane/derrick, as defined in ASME B30.5, must have a built-in horn or a removable horn that is available to the operator.

(ii) If a built-in horn is not working properly, it must be tagged-out or removed. If a removable horn is not working properly, it must be removed.

(2) **Proper operation required**. Operations must not begin unless the devices listed in this section are in proper working order. If a device stops working properly during operations, the operator must safely stop operations. If any of the devices listed in this section are not in proper working order, the equipment must be taken out of service and operations must not resume until the device is again working properly. Alternative measures are not permitted to be used.

[Statutory Authority: RCW 49.17.010, .040, .050, and .060. 16-09-085 (Order 15-08), § 296-155-53410, filed 04/19/16, effective, 05/20/16. Statutory Authority: RCWs 47.17.010, 49.17.040, 49.17.050, 49.17.440 and 49.17.060. 12-01-086 (Order 08-32), § 296-155-53410, filed 12/20/11, effective 02/01/12.]

WAC 296-155-53412 Operational Aids.

(1) The devices listed in this section (listed operational aids) are required on all cranes/derricks, except tower cranes and self-erecting tower cranes, covered by this part, unless otherwise specified. For requirements relating to operational aids and safety devices for tower cranes, see WAC 296-155-53900 (60) and (61), for self-erecting tower cranes see WAC 296-155-54100 (42) and (43).

Note:

- *The requirements in subsection (3)(e), (f) and (g) of this section do not apply to articulating cranes.*
- *The requirements in subsection (3)(d), (e) and (h) of this section only apply to those digger derricks manufactured after the effective date of this section.*

(2) Operations must not begin unless the listed operational aids are in proper working order, except where an operational aid is being repaired you use the specified temporary alternative measures. More protective alternative measures specified by the crane/derrick manufacturer, if any, must be followed.

(3) When operational aids are inoperative or malfunctioning, the crane and/or device manufacturer's recommendations for continued operation or shutdown of the crane must be followed until the problems are corrected. Without such recommendations and any prohibitions from the manufacturer against further operation, the following requirements apply:

> *Note: If a replacement part is no longer available, the use of a substitute device that performs the same type of function is permitted and is not considered a modification under WAC 296-155-53400 (58) and (59) (crane/derrick modifications).*

(a) Recalibration or repair of the operational aid must be accomplished as soon as is reasonably possible, as determined by a qualified person.

(b) Boom hoist limiting device (except for derricks with base mounted drums).

(i) For cranes manufactured after December 16, 1969, a boom hoist limiting device is required. Temporary alternative measures: One or more of the following methods must be used:

(A) Use a boom angle indicator.

(B) Clearly mark the boom hoist rope (so that it can easily be seen by the operator) at a point that will give the operator sufficient time to stop the hoist to keep the boom within the minimum allowable radius. In addition, install mirrors or remote video cameras and displays if necessary for the operator to see the mark.

(C) Clearly mark the boom hoist rope (so that it can easily be seen by a spotter) at a point that will give the spotter sufficient time to signal the operator and have the operator stop the hoist to keep the boom within the minimum allowable radius.

(ii) If the crane was manufactured on or before December 16, 1969, and is not equipped with a boom hoist limiting device, at least one of the measures in (b)(i)(A) through (C) of this subsection must be used.

(c) Luffing jib limiting device. Cranes with a luffing jib must have a luffing jib limiting device. Temporary alternative measures are the same as in (b)(i) of this subsection, except to limit the movement of the luffing jib rather than the boom hoist.

(d) Anti two-blocking device. (This does not apply to dedicated pile drivers.)

(i) Telescopic boom cranes manufactured after February 28, 1992, must be equipped with a device which automatically prevents damage from contact between the load block, overhaul ball, or similar component, and the boom tip (or fixed upper block or similar component). The device(s) must prevent such damage at all points where two-blocking could occur.

(A) Temporary alternative measures: Clearly mark the hoist rope (so that it can easily be seen by the operator) at a point that will give the operator sufficient time to stop the hoist to prevent two-blocking; and

(B) Use a spotter when extending the boom.

(ii) Lattice boom cranes.

(A) Lattice boom cranes manufactured after February 28, 1992, must be equipped with a device that either automatically prevents damage and load failure from contact between the load block, overhaul ball, or similar component, and the boom tip (or fixed upper block or similar component), or warns the operator in time for the operator to prevent two-blocking. The device(s) must prevent such damage/failure or provide adequate warning for all points where two-blocking could occur.

(B) Lattice boom cranes, and derricks, manufactured after the effective date of this standard must be equipped with a device which automatically prevents damage and load failure from contact between the load block, overhaul ball, or similar component, and the boom tip (or fixed upper block or similar component). The device(s) must prevent such damage/failure at all points where two-blocking could occur.

Exception: *The requirements in subsection (3)(d)(ii)(A) and (B) of this section do not apply to such lattice boom cranes when used for dragline, clamshell (grapple), magnet, drop ball (wrecking ball), container handling, concrete bucket, marine operations that do not involve hoisting personnel, and pile driving work.*

(C) Temporary alternative measures: Clearly mark the hoist rope (so that it can easily be seen by the operator) at a point that will give the operator sufficient time to stop the hoist to prevent two-blocking, or use a spotter.

(iii) Articulating cranes manufactured after December 31, 1999, that are equipped with a load hoist must be equipped with a device that automatically prevents damage from contact between the load block, overhaul ball, or similar component, and the boom tip (or fixed upper block or similar component). The device must prevent such damage at all points where two-blocking could occur. Temporary alternative measures: When two-blocking could only occur with movement of the load hoist, clearly mark the hoist rope (so that it can easily be seen by the operator) at a point that will give the operator sufficient

time to stop the hoist to prevent two-blocking, or use a spotter. When two-blocking could occur without movement of the load hoist, clearly mark the hoist rope (so that it can easily be seen by the operator) at a point that will give the operator sufficient time to stop the hoist to prevent two-blocking, and use a spotter when extending the boom.

(e) Boom angle or radius indicator (except for derricks with base mounted drum hoists). The crane must have a boom angle or radius indicator readable from the operator's station. Temporary alternative measures: Radii or boom angle must be determined by measuring the radii or boom angle with a measuring device.

(f) Jib angle indicator if the crane has a luffing jib. Temporary alternative measures: Radii or jib angle must be determined by ascertaining the main boom angle and then measuring the radii or jib angle with a measuring device.

(g) Boom length indicator if the crane has a telescopic boom, except where the rated capacity is independent of the boom length. Temporary alternative measures: One or more of the following methods must be used:

(i) Mark the boom with measured marks to calculate boom length; or

(ii) Calculate boom length from boom angle and radius measurements; or

(iii) Measure the boom with a measuring device.

(h) Load weighing and similar devices (this also applies to dedicated pile drivers manufactured more than one year after the effective date of this section). Cranes (other than derricks and articulating cranes) manufactured after March 29, 2003, with a rated capacity over 6,000 pounds must have at least one of the following: Load weighing device, load moment (or rated capacity) indicator, or load moment (or rated capacity) limiter.

(i) Temporary alternative measures: The weight of the load must be determined from a reliable source (such as the load's manufacturer), by a reliable calculation method (such as calculating a steel beam from measured dimensions and a known per foot weight), or by other equally reliable means. This information must be provided to the operator prior to the lift.

(ii) Articulating cranes manufactured after the effective date of this section must have at least one of the following: Automatic overload prevention device, load weighing device, load moment (or rated capacity) indicator, or load moment (rated capacity) limiter. Temporary alternative measures: The weight of the load must be determined from a source recognized by the industry (such as the load's manufacturer) or by a calculation method recognized by the industry (such as calculating a steel beam from measured dimensions and a known per foot weight). This information must be provided to the operator prior to the lift.

(i) Reserved.

(j) The following devices are required on cranes manufactured after the effective date of this section:

(i) Outrigger/stabilizer position (horizontal beam extension) sensor/monitor if the crane has outriggers or stabilizers. Temporary alternative measures: The operator must verify that the position of the outriggers or stabilizers is correct (in accordance with manufacturer procedures) before beginning operations requiring outrigger or stabilizer deployment.

(ii) Hoist drum rotation indicator if the crane/derrick has a hoist drum is not visible from the operator's station. Temporary alternative measures: Mark the drum to indicate the rotation of the drum. In addition, install mirrors or remote video cameras and displays if necessary for the operator to see the mark.

[Statutory Authority: RCW 49.17.010, .040, .050, and .060. 16-09-085 (Order 15-08), § 296-155-53412, filed 04/19/16, effective, 05/20/16. Statutory Authority: RCWs 47.17.010, 49.17.040, 49.17.050, 49.17.440 and 49.17.060. 12-01-086 (Order 08-32), § 296-155-53412, filed 12/20/11, effective 02/01/12.]

WAC 296-155-53414 Cranes/derricks with a rated hoisting/lifting capacity of 2,000 pounds or less.

For cranes/derricks with a maximum manufacturer-rated hoisting/lifting capacity of 2,000 pounds or less:

(1) **The following sections apply**: WAC 296-155-52900, Scope; WAC 296-155-52902, Definitions; WAC 296-155-53400 (34), (36) through (38), (45), (46), (59) and (67), General requirements; WAC 296-155-53404, Wire rope; WAC 296-155-53406, Signals; WAC 296-155-53408, Power line safety; WAC 296-155-53700(7), Mobile cranes--General; WAC 296-155-53715(5), Mobile cranes--Operations; WAC 296-155-539, Tower cranes; WAC 296-155-542, Overhead/bridge and gantry cranes; WAC 296-155-543, Derricks.

Note to subsection (1) of this section: Under subsection (2)(a) of this section, WAC 296-155-53402, (Assembly/disassembly) also apply.

(2) **Assembly/disassembly**.

(a) WAC 296-155-53402 (Assembly/disassembly) applies.

(b) Components and configuration. You must ensure that:

(i) The selection of components and the configuration of the crane/derrick which affects the capacity or safe operation of the crane/derrick complies with either the:

(A) Manufacturer instructions, recommendations, limitations, and specifications. When these documents and information are unavailable, a registered professional engineer familiar with the type of crane/derrick involved must approve, in writing, the selection and configuration of components; or

(B) Approved modifications that meet the requirements of WAC 296-155-53400 (58) and (59).

(ii) Post-assembly inspection. Upon completion of assembly, the crane/derrick is inspected to ensure that it is in compliance with subsection (2)(b)(i) of this section.

(c) Manufacturer prohibitions. You must comply with applicable manufacturer prohibitions.

(3) **Operation - Procedures**.

(a) You must comply with all manufacturer procedures applicable to the operational functions of the crane/derrick, including its use with attachments.

(b) Unavailable operation procedures. You must:

(i) Where the manufacturer procedures are unavailable, the employer must develop and ensure compliance with all procedures necessary for the safe operation of the crane/derrick and attachments.

(ii) Ensure that procedures for the operational controls are developed by a qualified person.

(iii) Ensure that procedures related to the capacity of the crane/derrick are developed and signed by a registered professional engineer.

(c) Accessibility. You must ensure that:

(i) The load chart must be available to the operator at the control station.

(ii) Procedures applicable to the operation of the crane/derrick, recommended operating speeds, special hazard warnings, instructions and operator's manual, are readily available for use by the operator.

(iii) Where rated capacities are available at the control station only in electronic form and failure occurs that makes the rated capacities inaccessible, the operator must immediately cease operations or follow safe shut-down procedures until the rated capacities (in electronic or other form) are available.

(4) **Safety devices and operational aids**.

(a) You must ensure that safety devices and operational aids that are part of the original equipment are maintained in accordance with manufacturer procedures.

(b) Anti two-blocking. You must ensure that cranes covered by this section manufactured after the effective date of this standard must have either an anti two-block device that meets the requirements of WAC 296-155-53412 (3)(d), or is designed so that, in the event of a two-block situation, no damage or load failure will occur (for example, by using a power unit that stalls in response to a two-block situation).

(5) **Operator qualifications**. You must train each operator, ensure that, prior to operating the crane/derrick, the operator is trained on the safe operation of the type of crane/derrick the operator will be using.

(6) **Signal person qualifications**. You must train each signal person, in the proper use of signals applicable to the use of the crane/derrick.

(7) **Keeping clear of the load**. WAC 296-155-53400(43) applies, except for WAC 296-155-53400 (43)(c)(iii) (qualified rigger).

(8) **Inspections**. You must ensure that the crane/derrick is inspected in accordance with manufacturer procedures.

(9) **Hoisting personnel**. You must ensure that equipment covered by this section is not used to hoist personnel.

(10) **Design**. You must ensure that the crane/derrick is designed by a qualified engineer.

[Statutory Authority: RCW 49.17.010, .040, .050, and .060. 16-09-085 (Order 15-08), § 296-155-53414, filed 04/19/16, effective, 05/20/16. Statutory Authority: RCWs 47.17.010, 49.17.040, 49.17.050, 49.17.440 and 49.17.060. 12-01-086 (Order 08-32), § 296-155-53414, filed 12/20/11, effective 02/01/12.]

WAC 296-155-537 Mobile cranes.

[Statutory Authority: RCWs 47.17.010, 49.17.040, 49.17.050, 49.17.440 and 49.17.060. 12-01-086 (Order 08-32), § 296-155-537, filed 12/20/11, effective 02/01/12.]

WAC 296-155-53700 Mobile cranes - general.

(1) All crawler or truck cranes (greater than 2,000 pounds capacity) in use must meet the applicable requirements for design, construction, testing, inspection, maintenance, and operation as prescribed in the ASME B30.5-2007, Safety Standard for Mobile and Locomotive Cranes. It is not the intent of this rule to require retrofitting of existing cranes. However, when an item is being modified, its performance needs to be reviewed by a qualified person and compared to the applicable sections of this rule. For modification requirements see WAC 296-155-53400 (58) and (59). For cranes manufactured prior to the effective date of this rule the design, construction and testing criteria must meet at a minimum, ASME B30.5-1989.

(2) Mobile cranes must have boom stops to provide resistance from backward overturning. Such as:

- A fixed or telescoping bumper;
- A shock absorbing bumper;
- Hydraulic boom elevation cylinder(s).

(3) Restraints must be provided that will keep the jibs from backward overturning.

(4) Boom angle or radius indicators readable from the operator's station must be provided.

(5) A means must be provided that automatically stops the hoisting of the boom when the boom reaches a predetermined high angle. This can be either:

- A boom hoist disconnect;
- A shutoff; or
- Hydraulic relief.

(6) A boom length indicator that is readable from the operator's station must be provided for telescopic booms, unless the load rating is independent of the boom length.

(7) Where the ground is soft or uneven, you must use timber, planking, or other suitable material to provide firm foundation and distribute the load.

(8) All welding procedures and welding operator qualifications must be in accordance with ANSI/AWS D14.3 when welding is to be performed on load-sustaining members.

[Statutory Authority: RCW 49.17.010, .040, .050, and .060. 16-09-085 (Order 15-08), § 296-155-53700, filed 04/19/16, effective, 05/20/16. Statutory Authority: RCWs 47.17.010, 49.17.040, 49.17.050, 49.17.440 and 49.17.060. 12-01-086 (Order 08-32), § 296-155-53700, filed 12/20/11, effective 02/01/12.]

WAC 296-155-53715 Mobile cranes--Operations.

(1) Where applicable, if the load hoist mechanism is not equipped with an automatic brake and the load must remain suspended for any considerable length of time, the operator must hold the drum from rotating in the lowering direction by activating a manually operated brake. The boom hoist brakes must be set, and on rope boom support cranes, a braking mechanism and a ratchet and pawl or other locking device must be engaged to prevent inadvertent lowering of the boom.

(2) On wheel-mounted cranes, you must not lift loads over the front area, except as permitted by the crane manufacturer.

(3) **Rolling outriggers**. Mobile cranes using rolling outriggers must use load charts from the crane manufacturer or an RPE that specifically address this configuration. If the crane manufacturer does not address the use of rolling outriggers while some of the crane's weight is on its wheels, then the user must use the “on rubber” chart.

(4) While in transit, you must exercise the following additional precautions:

(a) The boom should be carried in line with the direction of motion.

(b) You must secure the superstructure against rotation (or the boom placed in a boom rack mounted on the carrier), except when negotiating turns when there is an operator in the cab or the boom is supported on a dolly.

(5) You must travel a crane with or without a load in the configuration recommended by the crane manufacturer. In the event a configuration is not specified, then you must not attempt travel with the boom so high that it may bounce back over the cab.

(6) When rotating the crane, you must avoid sudden starts and stops. Rotational speed must be such that the load does not swing out beyond the radius at which it can be controlled. You must use a restraint line when rotation of the load is hazardous.

(7) You must not operate cranes without the ballast or counterweight being in place as specified by the crane manufacturer. Under specific conditions, such as during crane assembly or unusual boom configurations, you must adhere to the crane manufacturer's recommendations for the amount of ballast or counterweight.

(8) You must level the crane per the crane manufacturer's recommendation; in the event that these recommendations are not available you must follow an RPE's recommendation.

[Statutory Authority: RCW 49.17.010, .040, .050, and .060. 16-09-085 (Order 15-08), § 296-155-53715, filed 04/19/16, effective, 05/20/16. Statutory Authority: RCWs 47.17.010, 49.17.040, 49.17.050, 49.17.440 and 49.17.060. 12-01-086 (Order 08-32), § 296-155-53715, filed 12/20/11, effective 02/01/12.]

WAC 296-155-538 Articulating boom cranes.

[Statutory Authority: RCWs 47.17.010, 49.17.040, 49.17.050, 49.17.440 and 49.17.060. 12-01-086 (Order 08-32), § 296-155-538, filed 12/20/11, effective 02/01/12.]

WAC 296-155-53800 Articulating boom cranes--General.

(1) All articulating boom cranes in use must meet the applicable requirements for design, inspection, construction, testing, maintenance and operation as prescribed in the ASME B30.22-2010, Safety Standard for Articulating Boom Cranes. It is not the intent of this rule to require retrofitting of existing cranes. However, when an item is being modified, its performance needs to be reviewed by a qualified person and compared to the applicable sections of this rule. For modification requirements see WAC 296-155-53400 (58) and (59). For cranes manufactured prior to the effective date of this rule the design and construction criteria must meet at a minimum, ASME B30.22-1987.

(2) All articulating boom cranes with a winch must have a two-blocking damage prevention feature.

(3) All welding and welding operator qualifications for load sustaining members must be in accordance with ANSI/AWS D14.3.

[Statutory Authority: RCW 47.17.010, 49.17.040, 49.17.050, 49.17.440 and 49.17.060. 12-01-086 (Order 08-32), § 296-155-53800, filed 12/20/11, effective 02/01/12.]

WAC 296-155-53815 Articulating boom cranes--Operations.

(1) The operator must not engage in any practice that diverts their attention while actually engaged in operating the crane.

(2) Stabilizers/outriggers must be visible to the operator or to a signal person during extension or setting.

(3) When the crane is equipped with stabilizers/outriggers, they must be extended and set per manufacturer's recommendations. When applicable, cribbing under the stabilizers/outriggers must meet the following requirements:

   (a) Strong enough to prevent crushing;

   (b) Of such thickness, width, and length as to completely support the pad.

(4) Crane supports for individual stabilizer/outrigger pads must be level to the manufacturer's specifications or those of a qualified person. Supports may be timbers, cribbing, or other structural members to distribute the load so as not to exceed the allowable bearing capacity of the underlying material.

(5) In transit the boom must be carried in stowed position, as recommended by the manufacturer.

(6) The crane must not travel with a load on the hook unless allowed by the manufacturer.

(7) You must not use articulating boom cranes with suspended work platforms (baskets).

(8) The use of attached work platforms to the boom must be approved by the crane manufacturer.

Note: Requirements for personnel lifting are located in WAC 296-155-547.

[Statutory Authority: RCW 49.17.010, .040, .050, and .060. 16-09-085 (Order 15-08), § 296-155-53815, filed 04/19/16, effective, 05/20/16. Statutory Authority: RCW 47.17.010, 49.17.040, 49.17.050, 49.17.440 and 49.17.060. 12-01-086 (Order 08-32), § 296-155-53815, filed 12/20/11, effective 02/01/12.]

WAC 296-155-539 Tower cranes.

[Statutory Authority: RCWs 47.17.010, 49.17.040, 49.17.050, 49.17.440 and 49.17.060. 12-01-086 (Order 08-32), § 296-155-539, filed 12/20/11, effective 02/01/12.]

WAC 296-155-53900 Tower cranes--General.

(1) This section contains supplemental requirements for tower cranes; all sections of this part apply to tower cranes unless specified otherwise. In addition, the requirements in WAC 296-155-53402 apply unless otherwise specified, except that the term "assembly/disassembly" is replaced by "erecting, climbing and dismantling," and the term "disassembly" is replaced by "dismantling."

(2) All tower cranes in use must meet the applicable requirements for design, construction, installation, testing, maintenance, inspection, and operation as prescribed by the manufacturer. If the manufacturer's recommendations are not available, follow the requirements in ASME B30.3-2009. It is not the intent of this rule to require retrofitting of existing cranes. However, when an item is being modified, its performance needs to be reviewed by a qualified person and compared to the applicable sections of this rule. For modification requirements see WAC 296-155-53400 (58) and (59). For cranes manufactured prior to the effective date of this rule the design and construction criteria must meet at a minimum, ASME B30.3-1990.

(3) You must follow the manufacturer's recommendations when installing, erecting, and dismantling tower cranes. If the manufacturer's recommendations are not available, follow the requirements in ASME B30.3-2009.

(4) When cranes are erected/dismantled, written instructions by the manufacturer or qualified person and a list of the weights of each subassembly to be erected/dismantled must be at the site.

(5) A qualified person must supervise the erection, jumping and dismantling of the crane.

(6) You must establish procedures before beginning crane erection/dismantling work to implement the instructions and adapt them to the particular needs of the site.

(7) Tower cranes and tower crane assembly parts/components must be inspected by an accredited certifier, prior to assembly, following erection of the tower crane, after each climbing operation, or reconfiguring the boom, jib, or counterjib, before placing the crane in service. (See WAC 296-155-53206.) You must only use inspected and preapproved components in the assembly of a tower crane.

(8) You must erect tower masts plumb to a tolerance of 1:500 (approximately one inch in 40 feet) unless the manufacturer specifies otherwise and verified by a qualified person.

(9) You must install cranes that are required to weathervane when out-of-service with clearance for the boom (jib) and the superstructure to swing through a full 360 degree arc. You must maintain clearances recommended by the crane manufacturer between other weathervaning cranes and fixed objects.

(10) When the crane is out of operation, the jib or boom must be pointed downwind and the slewing brake must be released so as to permit the jib or boom to weathervane, provided the jib or boom has a clear 360 degree rotation.

(11) When the crane is out of operation and a 360 degree rotation is not feasible, you must follow the manufacturer's or RPE's written procedures for restraining the jib or boom from rotation.

(12) Foundations and structural supports. Tower crane foundations and structural supports (including both the portions of the structure used for support and the means of attachment) must be designed by the manufacturer or a registered professional engineer.

(13) Prior to erecting a tower crane on a nonstandard tower crane base/structural support, you must ensure that the engineering configuration of this base/structural support has been reviewed and acknowledged as acceptable by an independent registered professional structural engineer (RPSE), licensed under chapter 18.43 RCW.

(14) An RPSE must certify that the crane foundation, structural supports and underlying soil provide adequate support for the tower crane with its applied torsional and overturning moments and the horizontal and vertical forces.

(15) The controlling entity that installed the tower crane foundations and structural supports must provide a written statement/documentation to the A/D director stating that they were installed in accordance with their design and requirements the RPE, and the engineer of record if applicable.

(16) You must consult the engineer of record to verify that the host structure is capable of safely resisting the applied crane forces, if this engineer is not available an RSPE must perform this verification. When inside climbing cranes are used, the integrity of the host structure must be reviewed and approved by an RPSE, for the effects of the crane, load, and wind forces at each level of the structure.

(17) Prior to installing a tower crane that will be attached to an existing building, new construction, or structure, an RPSE must certify that the structural attachment to the building is designed to withstand the torsional and overturning moments and the horizontal and vertical forces created by the crane to be installed.

(18) The assembly/disassembly director must address backward stability before slewing, traveling or freestanding tower cranes on ballasted bases.

(19) The top of the support/foundation must be accessible and free of debris, materials and standing water. No materials can be stored on the support unless approved by a qualified person. Tower crane's foundation and fasteners must remain accessible and visible for inspection at all times.

(20) You must not climb tower cranes in concrete structures until the concrete at the levels at which horizontal and vertical supports are to be placed has reached sufficient strength to resist the crane reactions. It may be necessary to test concrete cylinders or cores or to use on-site testing techniques for this purpose.

(21) Climbing jack systems used for raising a tower crane must be equipped with over-pressure relief valves, direct-reading pressure gauges, and pilot-operated hydraulic check valves installed in a manner which will prevent the jack from retracting should a hydraulic line or fitting rupture or fail.

(22) Before climbing or erecting/dismantling, you must balance cranes in accordance with the manufacturer's or a qualified person's instructions. If no such limit has been set, wind velocity must not exceed the limit set by the manufacturer, or 20 miles per hour as indicated by a wind velocity device mounted near the top of the crane. The crane operator must be present during climbing or erecting/dismantling operations.

(23) You must not commence climbing operations until all crane support provisions at the new support level are in place as per the manufacturer's recommendations or as specified by an RPSE.

(24) Crane superstructures and counterjibs (counterweight jib) must be arranged to receive counterweights, made in accordance with the manufacturer's specifications for the specified jib or boom length, and to hold them in position. You must provide means to guard against shifting or dislodgement during crane operation. Manufacturer's specified counterweight weights are not to be exceeded.

(25) Moveable counterweights, if provided, must either move automatically or must be equipped with a position indicator with read out at the operator's station(s).

(26) When counterweight position is controlled by wire ropes, you must provide means to prevent uncontrolled movement in the event of wire rope or wire rope termination failure.

(27) When counterweight position is controlled by wire ropes and/or linkages between the counterweight and the boom, you must make provisions to avert structural damage if the boom is moved beyond its normal limits.

(28) For cranes utilizing ballast, bases must include provisions to support and position the ballast. You must provide means to guard against shifting or dislodgement of ballast during crane operation.

(29) All electrical equipment must be properly grounded and protection must be provided against lightning per the manufacturer's recommendation or if not available, a registered professional electrical engineer.

(30) Each electrically powered crane must have a main disconnect switch at or near the initial base of the crane. This switch must have provisions for locking in the “off” position.

(31) You must guard or locate equipment so that live parts are not exposed to inadvertent contact by personnel and equipment under normal operating conditions.

(32) You must protect electrical equipment from dirt, grease, oil, and moisture. Fixtures, wiring, and connections exposed to the weather must be of weather resistant type.

(33) Wiring must conform to the provisions of ANSI/NFPA 70 for temporary wiring. Motors, controls, switches, and other electrical equipment must meet the applicable requirements of ANSI/NFPA 70. Hoists, slewing, trolley, and travel controllers must conform to ISO 7752-1, 2010.

(34) You must make provisions to guard against reversing of each motor due to reversed phase connections.

(35) Electrical circuits between the fixed and rotating portions of the crane must pass through a slip ring assembly that will permit continuous rotation of the upper crane structure in either direction, unless other means are provided to prevent damage to the electrical conductors.

(36) Individual overload protection must be provided for each motor.

(37) Crane trucks must be fitted with sweeps extending below the top of the rail, unless the construction of the rail foundation prohibits such extension, and placed in front of the leading wheels in either direction. Truck wheels/bogies must be guarded.

(38) You must provide a means to limit the drop of truck frames in case of wheel or axle breakage to a distance that will not cause a crane to overturn.

(39) Multiple tower crane job sites. On job sites where more than one tower crane is installed, you must locate the cranes such that no crane may come in contact with the structure of another crane. Crane's jibs or booms are permitted to pass over one another.

(40) You must position tower cranes, in service, whereby they can slew 360 degrees without either the counterjib or jib/boom striking any building, structure, or other object, unless:

(a) Suitable anticollision devices are installed which will prohibit contact with such objects or;

(b) Direct voice communications are established between any operator of the tower crane(s) involved and a signal person so stationed where the boom and/or counterweight movement, and the object with which it may contact can be observed so that the operator(s) can be warned of imminent danger.

(i) You must establish a secondary means of positive communications as a back-up for possible direct voice communication failure.

(ii) Radio communication systems without tone coded squelch are prohibited. You must not use citizens band radios as a means of communications for tower cranes.

(41) Limit switches must be installed and you must keep them properly adjusted. You must protect or isolate them in a manner which will prevent unauthorized tampering. Limit switches must provide the following functions:

(a) Limit the travel of the trolley to prevent it from hitting the outer end of the jib.

(b) Limit the upward travel of the load block to prevent two-blocking.

(c) Lower over travel limiting devices must be provided for all load hoists where the hook area is not visible to the operator.

(d) In the absence of the crane manufacturer's specifications, limit the load being lifted in a manner whereby no more than 110% of the maximum rated load can be lifted or moved.

(e) Cranes mounted on rail tracks must be equipped with limit switches limiting the travel of the crane on the track and stops or buffers at each end of the tracks.

(42) All tower cranes manufactured after July 27, 2010, must be equipped with a safety device (also referred to as a limit device) that provides deceleration before the top position of the crane hook is reached.

(43) The load must be free when lifted; it must not be caught on nor attached to other objects. You must limit side loading of jibs to freely suspended loads. You must not use cranes for dragging loads.

(44) When the operator may be exposed to the hazard of falling objects, the tower crane cab and/or remote control station must have adequate overhead protection.

(45) You must provide a safe means for access to the tower, operator's cab and machinery platform.

(46) When necessary for inspection or maintenance purposes, you must provide ladders, walkways with railing or other devices.

(47) All crane brakes must automatically set in event of power failure. Slewing brakes must also function in this manner or be capable of being set manually.

(48) Each tower crane must be provided with a slewing brake capable of holding in both directions preventing the superstructure from rotating during operation and must be capable of being set in the holding position and remaining so without further action on the part of the operator.

(49) The trolley must be provided with an operating brake capable of stopping the trolley in either direction. The system must include a means for holding the trolley without further action on the part of the operator, and must engage automatically if power or pressure to the brake is lost.

(50) In addition to the operating brake, the trolley must be equipped with an automatic braking device capable of stopping trolley in either direction in the event of trolley drive rope breakage, if such ropes are used.

(51) The body or frame of the trolley must be fitted with a means to restrain the trolley from becoming detached from its guide rail(s) in the event of trolley wheel or axle breakage or side loading.

(52) The jib point sheave, if provided, must have at least one broad stripe of bright, contrasting color painted on each side so it can be determined whether or not the sheave is turning.

(53) You must protect employees required to perform duties on the boom/jib of tower cranes against falling in accordance with Part C-1 of this chapter.

(54) An audible signal must automatically sound whenever the crane travels in order to warn persons in the vicinity.

(55) You must mount a wind velocity indicating device at or near the top of the crane. You must provide a velocity readout at the operator's station in the cab, and a visible or audible alarm must be triggered in the cab and at remote control stations when a preset wind velocity has been exceeded.

(56) When the wind velocity indicating device is not functioning, crane operations may continue if another crane on the site is equipped with a functioning wind velocity indicator or if a qualified person determines that ambient wind velocity is within permitted limits.

(57) You must provide indicating devices to:

(a) Display the magnitude of the load on the hook;

(b) Display the boom angle or operating radius, as appropriate. On hammerhead booms (jibs), radius indication may be by means of flags or markers along the length of the boom (jib) so as to be visible to the operator;

(c) Display ambient wind velocity.

(58) You must provide limiting devices to:

(a) Decelerate the trolley travel at both ends of the jib prior to the final limit activation;

(b) Decelerate the luffing boom travel at upper and lower ends prior to final limit activation;

(c) Limit trolley travel at both ends of the jib;

(d) Stop boom luffing at lower and upper limits of boom movement;

(e) Decelerate the hoist up hook travel prior to final limit activation;

(f) Stop load block upper motion before two-blocking occurs;

(g) Stop load block downward motion to prevent the last two wraps of wire rope from spooling off the hoist drum;

(h) Limit crane travel at both ends of the runway tracks;

(i) Limit lifted load;

(j) Limit operating radius in accordance with lifted load, i.e., limit movement; and

(k) Limit pressures in hydraulic or pneumatic circuits.

(59) You must lock or seal load limiting devices and acceleration/deceleration limiters when provided with a method to inhibit tampering and unauthorized adjustment.

(60) **Safety devices**.

(a) The following safety devices are required on all tower cranes unless otherwise specified:

(i) Boom stops on luffing boom type tower cranes;

(ii) Jib stops on luffing boom type tower cranes if equipped with a jib attachment;

(iii) Travel rail end stops at both ends of travel rail;

(iv) Travel rail clamps on all travel bogies;

(v) Integrally mounted check valves on all load supporting hydraulic cylinders;

(vi) Hydraulic system pressure limiting device;

(vii) The following brakes, which must automatically set in the event of pressure loss or power failure, are required:

(A) A hoist brake on all hoists;

(B) Slewing brake;

(C) Trolley brake;

(D) Rail travel brake.

(viii) Deadman control or forced neutral return control (hand) levers;

(ix) Emergency stop switch at the operator's station;

(x) Trolley end stops must be provided at both ends of travel of the trolley.

(b) Proper operation required. You must not begin operations unless the devices listed in this subsection are in proper working order. If a device stops working properly during operations, the operator must safely stop operations. You must take the crane out of service, and you must not resume operations until the device is again working properly. You must not use alternative measures.

(61) **Operational aids**.

(a) The devices listed in this subsection (operational aids) are required on all tower cranes covered by this part, unless otherwise specified.

(b) You must not begin crane operations unless the operational aids are in proper working order, except where you meet the specified temporary alternative measures. You must follow more protective alternative measures, if any are specified by the tower crane manufacturer.

(c) When operational aids are inoperative or malfunctioning, you must follow the crane and/or device manufacturer's recommendations for operation or shutdown of the crane until the problems are corrected. Without such recommendations and any prohibitions from the manufacturer against further operation, the following requirements apply:

Note: If a replacement part is no longer available, the use of a substitute device that performs the same type of function is permitted and is not considered a modification under WAC 296-155-53400 (58) and (59).

(i) You must accomplish recalibration or repair of the operational aid as soon as is reasonably possible, as determined by a qualified person.

(ii) Trolley travel limiting device. The travel of the trolley must be restricted at both ends of the jib by a trolley travel limiting device to prevent the trolley from running into the trolley end stops. Temporary alternative measures:

(A) Option A. You must mark the trolley rope (so it can be seen by the operator) at a point that will give the operator sufficient time to stop the trolley prior to the end stops.

(B) Option B. You must use a spotter who is in direct communication with the operator when operations are conducted within 10 feet of the outer or inner trolley end stops.

(iii) Boom hoist limiting device. You must limit the range of the boom at the minimum and maximum radius. Temporary alternative measures: Clearly mark the hoist rope (so it can be seen by the operator) at a point that will give the operator sufficient time to stop the boom hoist within the minimum and maximum boom radius, or use a spotter who is in direct communication with the operator to inform the operator when this point is reached.

(iv) Anti two-blocking device. The tower crane must be equipped with a device which automatically prevents damage from contact between the load block, overhaul ball, or similar component, and the boom tip (or fixed upper block or similar component). The device(s) must prevent such damage at all points where two-blocking could occur. Temporary alternative measures: Clearly mark the hoist rope (so it can be seen by the operator) at a point that will give the operator sufficient time to stop the hoist to prevent two-blocking, or use a spotter who is in direct communication with the operator to inform the operator when this point is reached.

Note: This temporary alternative measure cannot be used if lifting personnel in a suspended platform.

(v) Hoist drum lower limiting device. Tower cranes manufactured after the effective date of this section must be equipped with a device that prevents the last two wraps of hoist cable from being spooled off the drum. Temporary alternative measures: Mark the hoist rope (so it can be seen by the operator) at a point that will give the operator sufficient time to stop the hoist prior to last two wraps of hoist cable being spooled off the drum, or use a spotter who is in direct communication with the operator to inform the operator when this point is reached.

(vi) Load moment limiting device. The tower crane must have a device that prevents moment overloading. Temporary alternative measures: You must use a radius indicating device (if the tower crane is not equipped with a radius indicating device, you must measure the radius to ensure the load is within the rated capacity of the crane). In addition, the weight of the load must be determined from a reliable source (such as the load's manufacturer), by a reliable calculation method (such as calculating a steel beam from measured dimensions and a known per foot weight), or by other equally reliable means. You must provide this information to the operator prior to the lift.

(vii) Hoist line pull limiting device. You must limit the capacity of the hoist to prevent overloading, including each individual gear ratio if equipped with a multiple speed hoist transmission. Temporary alternative measures: The operator must ensure that the weight of the load does not exceed the capacity of the hoist (including for each individual gear ratio if equipped with a multiple speed hoist transmission).

(viii) Rail travel limiting device. You must limit the travel distance in each direction to prevent the travel bogies from running into the end stops or buffers. Temporary alternative measures: You must use a spotter who is in direct communication with the operator when operations are conducted within 10 feet of either end of the travel rail end stops; the spotter must inform the operator of the distance of the travel bogies from the end stops or buffers.

(ix) Boom hoist drum positive locking device and control. The boom hoist drum must be equipped with a control that will enable the operator to positively lock the boom hoist drum from the cab. Temporary alternative measures: You must manually set the device when required if an electric, hydraulic or automatic type is not functioning.

(x) Boom angle or hook radius indicator.

(A) Luffing boom tower cranes must have a boom angle indicator readable from the operator's station.

(B) Hammerhead tower cranes manufactured after the effective date of this section must have a hook radius indicator readable from the operator's station. Temporary alternative measures: You must determine hook radii or boom angle by measuring the hook radii or boom angle with a measuring device.

(xi) Trolley travel deceleration device. You must automatically reduce the trolley speed prior to the trolley reaching the end limit in both directions. Temporary alternative measures: You must post a notice in the cab of the crane notifying the operator that the trolley travel deceleration device is malfunctioning and instructing the operator to take special care to reduce the trolley speed when approaching the trolley end limits.

(xii) Boom hoist deceleration device. You must automatically reduce the boom speed prior to the boom reaching the minimum or maximum radius limit. Temporary alternative measures: You must post a notice in the cab of the crane notifying the operator that the boom hoist deceleration device is malfunctioning and instructing the operator to take special care to reduce the boom speed when approaching the boom maximum or minimum end limits.

(xiii) Load hoist deceleration device. You must automatically reduce the load speed prior to the hoist reaching the upper limit. Temporary alternative measures: You must post a notice in the cab of the crane notifying the operator that the load hoist deceleration device is malfunctioning and instructing the operator to take special care to reduce the hoist speed when approaching the upper limit.

(xiv) Wind speed indicator. You must provide a device to display the wind speed and it must be mounted at or near the top of the crane structure. Temporary alternative measures: Use of wind speed information from a properly functioning indicating device on another tower crane on the same site, or a qualified person estimates the wind speed.

(xv) Load indicating device. Cranes manufactured after the effective date of this section, must have a device that displays the magnitude of the load on the hook. Displays that are part of load moment limiting devices that display the load on the hook meet this requirement. Temporary alternative measures: The weight of the load must be determined from a reliable source (such as the load's manufacturer), by a reliable calculation method (such as calculating a steel beam from measured dimensions and a known per foot weight), or by other equally reliable means. You must provide this information to the operator prior to the lift.

(62) You must not install advertising signs or similar panels on the crane or tower unless size, design, and positioning satisfy the manufacturer's recommendations, in the absence of the manufacturer's recommendations, you must obtain an RPE's written approval.

(63) For night operations, lighting must be adequate to illuminate the working areas while not interfering with the operator's vision.

(64) All welding procedures and welding operator qualifications for use in repair or alteration of load sustaining members must be in accordance with ANSI/AWS D14.3 or ANSI/AWS D1.1. Where special steels or other materials are used, the manufacturer or a qualified person must provide welding procedure instructions. The type of metal used for load sustaining members must be identified by the manufacturer. In the absence of the manufacturer you must use an RPSE.

[Statutory Authority: RCW 49.17.010, .040, .050, and .060. 16-09-085 (Order 15-08), § 296-155-53900, filed 04/19/16, effective, 05/20/16. Statutory Authority: RCW 47.17.010, 49.17.040, 49.17.050, 49.17.440 and 49.17.060. 12-01-086 (Order 08-32), § 296-155-53900, filed 12/20/11, effective 02/01/12.]

WAC 296-155-53905 Tower cranes--Additional inspection criteria.

(1) In addition to the requirements in WAC 296-155-53405, the following additional items must be included:

(a) Tower (mast) bolts and other structural bolts (for loose or dislodged condition) from the base of the tower crane up or, if the crane is tied to or braced by the structure, those above the upper-most brace support.

(b) The upper-most tie-in, braces, floor supports and floor wedges where the tower crane is supported by the structure, for loose or dislodged components.

(2) **Annual**. In addition to the items that must be inspected under WAC 296-155-53405(5), all turntable and tower bolts must be inspected for proper condition and torque.

[Statutory Authority: RCW 47.17.010, 49.17.040, 49.17.050, 49.17.440 and 49.17.060. 12-01-086 (Order 08-32), § 296-155-53905, filed 12/20/11, effective 02/01/12.]

WAC 296-155-53915 Tower cranes--Operations.

(1) The operator must not engage in any practice that diverts their attention while actually engaged in operating the crane.

(2) **The operator must do the following before leaving the crane unattended**:

(a) Set down the load, rigging gear, bucket, lifting magnet, or other devices.

(b) Position trolley in accordance with the manufacturer's recommendations unless the site specific application drawing requires a different position.

(c) Leave the superstructure free to weathervane unless provisions for nonweathervaning have been specified by the manufacturer or by a qualified person.

(d) Disconnect power to operating controls or disengage the master clutch, as applicable.

(e) Place all controls in the “off” or “neutral” position.

(f) Secure the crane against accidental travel.

(g) Stop the internal combustion engine, when provided.

EXEMPTION:
If crane operation is frequently interrupted during a shift, the crane may remain running while the operator remains on the crane superstructure.

(h) Restrain the crane from travel with rail clamps, or other means provided, when a wind alarm is given or on leaving the crane overnight.

Note: Additional information relating to cranes being unattended are located in WAC 296-155-53400(52) of this part.

(3) **If power fails during operation, the operator must**:

(a) Set trolley, hoist, and travel brakes and locking devices, as applicable;

(b) Move all clutch or other power controls to the “off” or “neutral” position;

(c) If practical, you must land the suspended load under brake control.

(4) You must not climb cranes to a new operating level nor operate them when wind speeds exceed the maximum velocity recommended by the manufacturer. Where the manufacturer does not specify this information, an RPE must determine the maximum allowable wind velocity. Climbing operations are not allowed until tie-ins at the new support level as specified by a qualified person are in place.

(5) Prior to daily operation, you must check to determine if they are working properly as required in WAC 296-155-53405 and 296-155-53905.

(6) During adverse weather conditions which reduce visibility, you must perform operations according to the manufacturer's specifications, when not available in accordance with an RPE's written instructions.

(7) You must not lower the load below the point where less than two full wraps of rope remain on the drum.

(8) When slewing the boom (jib), trolleying a load, or traveling the crane, you must avoid sudden starts and stops. Slew and travel speeds must be such that the load does not swing out beyond the radius at which it can be controlled. You must use a tag or restraint line when swinging of the load is hazardous.

(9) You must operate cranes without the ballast or counterweight in place as specified by the manufacturer. Under specific conditions, such as during crane assembly or disassembly, you must adhere to the manufacturer's recommendations for the amount of partial ballast or counterweight. You must not exceed the maximum ballast or counterweight approved by the manufacturer or an RPE for use on a given crane.

[Statutory Authority: RCW 49.17.010, .040, .050, and .060. 16-09-085 (Order 15-08), § 296-155-53915, filed 04/19/16, effective, 05/20/16. Statutory Authority: RCWs 47.17.010, 49.17.040, 49.17.050, 49.17.440 and 49.17.060. 12-01-086 (Order 08-32), § 296-155-53915, filed 12/20/11, effective 02/01/12.]

WAC 296-155-541 Self-erecting tower cranes.

[Statutory Authority: RCW 47.17.010, 49.17.040, 49.17.050, 49.17.440 and 49.17.060. 12-01-086 (Order 08-32), § 296-155-541, filed 12/20/11, effective 02/01/12.]

WAC 296-155-54100 Self-erecting tower cranes--General.

(1) All self-erecting tower cranes in use must meet the applicable requirements for design, construction, installation, testing, maintenance, inspection, and operation as prescribed by the manufacturer. For modification requirements see WAC 296-155-53400 (58) and (59).

(2) In addition to the requirements in WAC 296-155-53402(6), employees must not be in or under the tower, jib, or rotating portion of the crane during erecting, climbing and dismantling operations until the crane is secured in a locked position and the competent person in charge indicates it is safe to enter this area, unless the manufacturer's instructions direct otherwise and only the necessary personnel are permitted in this area.

(3) When cranes are erected, reconfigured, or dismantled, you must follow written instructions by the manufacturer. If circumstances do not permit the normal manufacturer's written instructions from being followed, you must follow alternative written instructions from the manufacturer or an RPE.

(4) You must perform erection, reconfiguration, and dismantling under the supervision of a qualified person.

(5) You must carefully assess the area in which a crane is to be set up to ensure that it is suitable before the crane is taken to site and put into service. The area chosen must be of a sufficient size to enable the crane to be maneuvered into position, set up, operated and dismantled, with sufficient clearances between the crane and surrounding structures, as detailed by application drawings and in the manufacturer's operation and instruction manual.

(6) When setting up a crane, you must take care to ensure that the crane will not contact or approach overhead hazards such as power lines, communications cables or overhead structures.

(7) The assembly/disassembly director must address backward stability before slewing self-erecting tower cranes.

(8) Crane supports for individual outrigger pads must be level to the manufacturer's specifications or those of a qualified person. Supports may be timbers, cribbing, or other structural members to distribute the load so as not to exceed the allowable bearing capacity of the underlying material.

(9) All load bearing foundations, supports, and rail tracks must be constructed or installed to support the crane loads and to transmit them to the soil or other support medium. In addition to supporting vertical load, foundations and supports, rail supports excepted, must be designed to provide a moment resisting overturning equal to a minimum of 150% of the maximum crane overturning moment. This requirement may be met by means of structural anchors or ballast weights.

(10) In addition to the requirements in WAC 296-155-53400 (36) and (37), a qualified person must ensure that the underlying soil is adequate support for the crane with its maximum forces recommended by the manufacturer.

(11) You must install cranes required to weathervane when out-of-service with clearance for jib and superstructure to slew a full 360 degree arc unobstructed without encroaching any power line “Danger-Swing/Crush Zone.” You must maintain clearances recommended by the crane manufacturer between weathervaning cranes, fixed objects and other cranes.

(12) When the crane is out of operation and a 360 degree rotation is not provided, follow the manufacturer's or RPE's written procedures.

(13) You must not install advertising signs or similar panels on the crane or tower unless size, design, and positioning satisfy the manufacturer's recommendations. In the absence of the manufacturer's recommendations, you must obtain an RPE's written approval.

(14) Prior to installing a self-erecting tower crane on a building or structure you must consult the engineer of record to verify that the host structure is capable of safely resisting the applied crane forces, if this engineer is not available an RSPE must perform this verification.

(15) When cranes are erected and after each reconfiguration, before placing the crane in service, all functional motions, motion limiting devices, brakes, and you must test indicating devices for operation.

(a) The order in which tests of a newly erected or reconfigured crane are to be performed is as follows:

(i) Functional motion tests without load. Each test must include:

(A) Load hoisting and lowering;

(B) Jib elevating and lowering, or traversing the trolley;

(C) Slew motion;

(D) Brakes and clutches;

(E) Operational aids and motion limiting devices;

(F) Remote control, if provided.

(ii) Functional load tests at rated load. Each test must include:

(A) Load hoisting and lowering;

(B) Jib elevating and lowering, or traversing the trolley;

(C) Slew motion;

(D) Brakes and clutches;

(E) Operational aids and load limiting devices;

(F) Remote control, if provided.

(b) During the test, you must check the crane supports. Any observed displacement is reason to suspend testing until an evaluation is made by a qualified person.

(16) Conditions that adversely affect the crane at the time of erection, reconfiguration, or dismantling must be a limiting factor that could require suspending the operation. These conditions include but are not limited to:

(a) Support conditions;

(b) Wind velocity or gusting winds;

(c) Heavy rain;

(d) Fog;

(e) Extreme cold or heat;

(f) Ice;

(g) Artificial lighting.

(17) For night operations, lighting must be adequate to illuminate the working areas while not interfering with the operator's vision.

(18) For cranes utilizing ballast, bases must include provisions to support and position the ballast. You must provide means to guard against shifting or dislodgement during crane operation.

(19) Superstructures must be arranged to receive counterweights, made in accordance with the crane manufacturer's specifications, and to hold them in position. You must provide means to guard against shifting or dislodgement during crane operation.

(20) Counterweights must be securely fastened in place and must be at the location and within the weight tolerance as recommended by the manufacturer.

(21) **Limiting devices must be provided to**:

(a) Decelerate the trolley and hoist hook prior to activating the motion stop limit;

(b) Limit trolley travel at both ends of the jib;

(c) Limit jib telescoping at inner and outer position;

(d) Stop load block upward motion before two-blocking occurs;

(e) Stop load block downward motion to prevent the last two wraps of wire rope from spooling off the hoist drum;

(f) Limit crane travel at both ends of the runway tracks;

(g) Limit lifted load;

(h) Limit operating radius in accordance with lifted load, i.e., limit moment; and

(i) Limit pressures in hydraulic or pneumatic circuits, i.e., pressure relief valves.

(22) Load limiting devices and acceleration/deceleration limiters must be locked or sealed when provided with a method to inhibit tampering and unauthorized adjustment.

(23) All crane brakes must automatically set in event of power failure. Slew brakes must also function in this manner or be capable of being set manually.

(24) Each crane must be provided with a slewing brake capable of holding in both directions preventing the superstructure from rotating during operation and must be capable of being set in the holding position and remaining so without further action on the part of the operator.

(25) The trolley must be provided with an operating brake capable of stopping the trolley in either direction. The system must include a means for holding the trolley without further action on the part of the operator, and must engage automatically if power or pressure to the brake is lost.

(26) In addition to the operating brake, the trolley must be equipped with an automatic braking device capable of stopping the movement of the load trolley in the event of trolley drive rope breakage, if such ropes are used.

(27) The body or frame of the trolley must be fitted with a means to restrain the trolley from becoming detached from its guide rail(s) in the event of trolley wheel or axle breakage or side loading.

(28) All electrical equipment must be properly grounded and protection must be provided against lightning per the manufacturer's recommendations or if not available, a registered professional electrical engineer.

(29) Each electrically powered crane must have an over-current protected main disconnect switch mounted at or near the initial base of the crane. This switch must have provisions for locking in the off position.

(30) You must locate or guard electrical equipment so that live parts are not exposed to inadvertent contact by personnel and equipment under normal operating conditions.

(31) You must protect electrical equipment from dirt, grease, oil, and moisture. Fixtures, wiring, and connections exposed to the weather must be of weather resistant type.

(32) Wiring must conform to the provisions of ANSI/NFPA 70 for temporary wiring. Motors, controls, switches, and other electrical equipment must meet the applicable requirements of ANSI/NFPA 70. Hoists, slewing, trolley, and travel controllers must conform to ISO 7752-1, 2010.

(33) You must make provisions to guard against any crane function operating in the opposite intended direction due to reversed phase connections.

(34) Electrical circuits between the fixed and rotating portions of the crane must pass through a slip ring assembly that will permit continuous rotation of the upper crane structure in either direction unless other means are provided to prevent damage to the electrical conductors.

(35) Individual overload protection must be provided for each motor.

(36) For traveling cranes, both ends of all tracks must be provided with stops or buffers adjusted for simultaneous contact with both sides of the travel base. Stops attached to rails must be mounted not less than 3 feet (1 m) inboard of the last rail support. Cranes must be equipped with means to prevent running into the buffers or stops while under power.

(37) An audible signal device must be provided with the control located within reach of the operator.

(38) An audible signal must automatically sound whenever the crane travels in order to warn persons in the vicinity.

(39) Bogies must be fitted with sweeps extending below the top of the rail, unless the construction of the rail foundation prohibits such extension, and placed in front of the leading wheels in either direction. Bogie wheels must be guarded.

(40) You must provide a means to limit the drop of bogie frames in case of wheel or axle breakage to a distance that will not cause the crane to overturn.

(41) You must mount a wind velocity indicating device at or near the top of the crane. You must provide a velocity readout at the operator's station or in the cab. Temporary alternative measures: Use of wind speed information from a properly functioning indicating device on another tower crane on the same site, or a qualified person estimates the wind speed.

(42) **Safety devices**.

(a) The following safety devices are required on all self-erecting tower cranes unless otherwise specified:

(i) Boom stops on luffing boom type self-erecting tower cranes;

(ii) Jib stops on luffing boom type self-erecting tower cranes if equipped with a jib attachment;

(iii) Travel rail end stops at both ends of travel rail;

(iv) Travel rail clamps on all travel bogies;

(v) Integrally mounted check valves on all load supporting hydraulic cylinders;

(vi) Hydraulic system pressure limiting device;

(vii) The following brakes, which must automatically set in the event of pressure loss or power failure, are required:

(A) A hoist brake on all hoists;

(B) Slewing brake;

(C) Trolley brake;

(D) Rail travel brake.

(viii) Deadman control or forced neutral return control (hand) levers;

(ix) Emergency stop switch at the operator's station;

(x) Trolley end stops must be provided at both ends of travel of the trolley.

(b) Proper operation required. You must not begin operations unless the devices listed in this subsection are in proper working order. If a device stops working properly during operations, the operator must safely stop operations. You must take the crane out of service, and you must not resume operations until the device is again working properly. Alternative measures are not permitted to be used.

(43) **Operational aids**.

(a) The devices listed in this subsection (operational aids) are required on all self-erecting tower cranes covered by this part, unless otherwise specified.

(b) You must not begin crane operations unless the operational aids are in proper working order, except where the employer meets the specified temporary alternative measures. You must follow protective alternative measures specified by the self-erecting tower crane manufacturer, if any.

(c) When operational aids are inoperative or malfunctioning, you must follow the crane and/or device manufacturer's recommendations for operation or shutdown of the crane until the problems are corrected. Without such recommendations and any prohibitions from the manufacturer against further operation, the following requirements apply:

Note: If a replacement part is no longer available, the use of a substitute device that performs the same type of function is permitted and is not considered a modification under WAC 296-155-53400 (58) and (59).

(i) You must accomplish recalibration or repair of the operational aid as soon as is reasonably possible, as determined by a qualified person.

(ii) Trolley travel limiting device. The travel of the trolley must be restricted at both ends of the jib by a trolley travel limiting device to prevent the trolley from running into the trolley end stops. Temporary alternative measures:

(A) Option A. You must mark the trolley rope (so it can be seen by the operator) at a point that will give the operator sufficient time to stop the trolley prior to the end stops.

(B) Option B. You must use a spotter who is in direct communication with the operator when operations are conducted within 10 feet of the outer or inner trolley end stops.

(iii) Boom hoist limiting device. You must limit the range of the boom at the minimum and maximum radius. Temporary alternative measures: Clearly mark the hoist rope (so it can be seen by the operator) at a point that will give the operator sufficient time to stop the boom hoist within the minimum and maximum boom radius, or use a spotter who is in direct communication with the operator to inform the operator when this point is reached.

(iv) Anti two-blocking device. The self-erecting tower crane must be equipped with a device which automatically prevents damage from contact between the load block, overhaul ball, or similar component, and the boom tip (or fixed upper block or similar component). The device(s) must prevent such damage at all points where two-blocking could occur. Temporary alternative measures: Clearly mark the hoist rope (so it can be seen by the operator) at a point that will give the operator sufficient time to stop the hoist to prevent two-blocking, or use a spotter who is in direct communication with the operator to inform the operator when this point is reached.

Note: This temporary alternative measure cannot be used if lifting personnel in a suspended platform.

(v) Hoist drum lower limiting device. Self-erecting tower cranes manufactured after the effective date of this section must be equipped with a device that prevents the last two wraps of hoist cable from being spooled off the drum. Temporary alternative measures: Mark the hoist rope (so it can be seen by the operator) at a point that will give the operator sufficient time to stop the hoist prior to last two wraps of hoist cable being spooled off the drum, or use a spotter who is in direct communication with the operator to inform the operator when this point is reached.

(vi) Load moment limiting device. The self-erecting tower crane must have a device that prevents moment overloading. Temporary alternative measures: You must use a radius indicating device (if the tower crane is not equipped with a radius indicating device, you must measure the radius to ensure the load is within the rated capacity of the crane). In addition, the weight of the load must be determined from a reliable source (such as the load's manufacturer), by a reliable calculation method (such as calculating a steel beam from measured dimensions and a known per foot weight), or by other equally reliable means. You must provide this information to the operator prior to the lift.

(vii) Hoist line pull limiting device. You must limit the capacity of the hoist to prevent overloading, including each individual gear ratio if equipped with a multiple speed hoist transmission. Temporary alternative measures: The operator must ensure that the weight of the load does not exceed the capacity of the hoist (including for each individual gear ratio if equipped with a multiple speed hoist transmission).

(viii) Rail travel limiting device. You must limit the travel distance in each direction to prevent the travel bogies from running into the end stops or buffers. Temporary alternative measures: You must use a spotter who is in direct communication with the operator when operations are conducted within 10 feet of either end of the travel rail end stops; the spotter must inform the operator of the distance of the travel bogies from the end stops or buffers.

(ix) Boom hoist drum positive locking device and control. The boom hoist drum must be equipped with a control that will enable the operator to positively lock the boom hoist drum from the cab. Temporary alternative measures: You must manually set the device when required if an electric, hydraulic or automatic type is not functioning.

(x) Boom angle or hook radius indicator.

(A) Luffing boom self-erecting tower cranes must have a boom angle indicator readable from the operator's station.

(B) Self-erecting hammerhead cranes manufactured after the effective date of this section must have a hook radius indicator readable from the operator's station. Temporary alternative measures: You must determine the radii or boom angle by measuring the hook radii or boom angle with a measuring device.

(xi) Trolley travel deceleration device. You must automatically reduce the trolley speed prior to the trolley reaching the end limit in both directions. Temporary alternative measures: You must post a notice in the cab of the crane notifying the operator that the trolley travel deceleration device is malfunctioning and instructing the operator to take special care to reduce the trolley speed when approaching the trolley end limits.

(xii) Boom hoist deceleration device. You must automatically reduce the boom speed prior to the boom reaching the minimum or maximum radius limit. Temporary alternative measures: You must post a notice in the cab of the crane notifying the operator that the boom hoist deceleration device is malfunctioning and instructing the operator to take special care to reduce the boom speed when approaching the boom maximum or minimum end limits.

(xiii) Load hoist deceleration device. You must automatically reduce the load speed prior to the hoist reaching the upper limit. Temporary alternative measures: You must post a notice in the cab of the crane notifying the operator that the load hoist deceleration device is malfunctioning and instructing the operator to take special care to reduce the hoist speed when approaching the upper limit.

(xiv) Wind speed indicator. You must provide a device to display the wind speed and it must be mounted at or near the top of the crane structure. Temporary alternative measures: Use of wind speed information from a properly functioning indicating device on another crane on the same site, or a qualified person estimates the wind speed.

(xv) Load indicating device. Cranes manufactured after the effective date of this section, must have a device that displays the magnitude of the load on the hook. Displays that are part of load moment limiting devices that display the load on the hook meet this requirement. Temporary alternative measures: You must determine the weight of the load from a reliable source (such as the load's manufacturer), by a reliable calculation method (such as calculating a steel beam from measured dimensions and a known per foot weight), or by other equally reliable means. You must provide this information to the operator prior to the lift.

(44) All welding procedures and welding operator qualifications for use in repair or alteration of load sustaining members must be in accordance with ANSI/AWS D14.3 or ANSI/AWS D1.1. Where special steels or other materials are used, the manufacturer or a qualified person must provide welding procedure instructions. The type of metal used for load sustaining members must be identified by the manufacturer. In the absence of the manufacturer you must use an RPSE.

[Statutory Authority: RCW 49.17.010, .040, .050, and .060. 16-09-085 (Order 15-08), § 296-155-54100, filed 04/19/16, effective, 05/20/16. Statutory Authority: RCWs 47.17.010, 49.17.040, 49.17.050, 49.17.440 and 49.17.060. 12-01-086 (Order 08-32), § 296-155-54100, filed 12/20/11, effective 02/01/12.]

WAC 296-155-54115 Self-erecting tower cranes--Operations.

(1) The operator must not engage in any practice that diverts their attention while actually engaged in operating the crane.

(2) **Before leaving the crane unattended the operator must**:

(a) Set down the load, rigging gear, bucket, lifting magnet, or other devices;

(b) Land any load suspended below the hook;

(c) Put controls in the off or neutral position;

(d) Set brakes and other locking devices;

(e) Disengage the main control circuit;

(f) Stop the engine: An exception to this may exist when crane operation is frequently interrupted during a shift and the operator must leave the crane. Under these circumstances, the engine may remain running and (a) through (e) of this subsection apply. The operator must be situated where any entry to the crane can be observed.

(g) Leave the superstructure free to weathervane unless provisions for nonweathervaning have been specified by the manufacturer or by a qualified person.

Note: Additional information relating to cranes being unattended are located in WAC 296-155-53400(52) of this part.

(3) **If power fails during operation, the operator must**:

(a) Set all brakes and locking devices;

(b) Move all clutch or other power controls to the “off” or “neutral” position;

(c) If practical, the suspended load must be landed under brake control, according to the manufacturer's procedures.

(4) The operator must be familiar with the crane and its proper care. If adjustments or repairs are necessary, the operator must report the condition to the competent person. The next operator must be notified of the condition.

(5) All controls must be tested by the operator at the start of a new shift, if possible. If any controls fail to operate properly, you must adjust or repair them before operations are initiated.

(6) You must not operate cranes when wind speeds exceed the maximum velocity recommended by the manufacturer. Where the manufacturer does not specify this information, an RPE must determine the maximum allowable velocity.

(7) Prior to daily operation, you must check operator aids to determine if they are working properly as required in WAC 296-155-53405(3).

(8) During adverse weather conditions which reduce visibility, you must perform operations in accordance with the manufacturer's specifications, when not available follow RPE's recommendations for reduced function speeds and with signaling means appropriate to the situation.

(9) No less than two full wraps of rope must remain on the load hoist drum(s) at any time during operation.

(10) When slewing the boom (jib), trolleying a load, or traveling the crane, you must avoid sudden starts and stops. Slew and travel speeds must be such that the load does not swing out beyond the radius at which it can be controlled. You must use a tag or restraint line when uncontrolled rotation of the load is hazardous.

(11) You must not operate cranes without the ballast or counterweight in place as specified by the manufacturer. Under specific conditions, such as during crane assembly or disassembly, you must adhere to the manufacturer's recommendations for the amount of partial ballast or counterweight. You must not exceed the maximum ballast or counterweight approved by the manufacturer for use on a given crane.

(12) The load must be free when lifted; it must not be caught on nor attached to other objects. Side loading of jibs must be limited to freely suspended loads. You must not use cranes for dragging loads.

[Statutory Authority: RCW 49.17.010, .040, .050, and .060. 16-09-085 (Order 15-08), § 296-155-54115, filed 04/19/16, effective, 05/20/16. Statutory Authority: RCWs 47.17.010, 49.17.040, 49.17.050, 49.17.440 and 49.17.060. 12-01-086 (Order 08-32), § 296-155-54115, filed 12/20/11, effective 02/01/12.]

WAC 296-155-542 Overhead/bridge and gantry cranes.

[Statutory Authority: RCWs 47.17.010, 49.17.040, 49.17.050, 49.17.440 and 49.17.060. 12-01-086 (Order 08-32), § 296-155-542, filed 12/20/11, effective 02/01/12.]

WAC 296-155-54200 Overhead/bridge and gantry cranes--General.

(1) Permanently installed overhead/bridge and gantry cranes which are located in a manufacturing facility or powerhouse must follow the requirements of WAC 296-24-235 (General safety and health standards), even when a construction activity is being performed. This requirement applies to overhead, bridge, gantry cranes, including semigantry, cantilever gantry, wall cranes, storage bridge cranes, and others having the same fundamental characteristics.

(2) Overhead and gantry cranes that are not permanently installed must follow the applicable requirements in chapter 296-155 WAC Part L.

(3) Cranes included in this section must meet the applicable requirements for design, inspection, construction, testing, maintenance and operation as prescribed in:

(a) ASME B30.2-2005, Safety Standard for Overhead and Gantry Cranes (Top Running Bridge, Single or Multiple Girder, Top Running Trolley Hoist).

(b) ASME B30.11-2010, Safety Standards for Monorails and Underhung Cranes.

(c) ASME B30.17-2006, Safety Standards for Overhead and Gantry Cranes (Top Running Bridge, Single Girder, Underhung Hoist).

(d) It is not the intent of this rule to require retrofitting of existing cranes. However, when an item is being modified, its performance needs to be reviewed by a qualified person and compared to the applicable sections of this rule. For modification requirements see WAC 296-155-53400 (58) and (59). For cranes manufactured prior to the effective date of this rule the design and construction criteria must meet at a minimum, ASME B30.2.0-1990.

(4) The rated load of the crane must be plainly marked on each side of the crane, and if the crane has more than one hoisting unit, each hoist must have its rated load marked on it or its load block, and this marking must be clearly legible from the ground or floor.

(5) The crane or surrounding structure must be marked to provide operating directions that match and are visible from the crane's operating controls, i.e., north/south, east/west or forward/back, left/right.

(6) Overhead and gantry cranes with bridge trucks must be equipped with sweeps which extend below the top of the rail and project in front of the truck wheels.

(7) Except for floor-operated cranes, an effective warning device must be provided for each crane equipped with a power traveling mechanism.

(8) You must provide a wind-indicating device for all outdoor overhead and gantry cranes. The device must be mounted on the crane runway structure and must give a visible and audible alarm to the crane operator at a predetermined wind velocity. A single wind-indicating device may serve as an alarm for more than one crane.

(9) **Electrical**.

(a) Wiring and equipment must comply with Article 610 of ANSI/NFPA No. 70, National Electrical Code and chapter 296-155 WAC Part I.

(b) The control circuit voltage must not exceed 600 volts for AC or DC.

(c) The voltage at pendant pushbuttons must not exceed 150 volts for AC and 300 volts for DC.

(d) Where multiple conductor cable is used with a suspended pushbutton station, the station must be supported in a manner that will protect the electrical conductors against strain.

(e) You must construct pendant control stations to prevent electrical shock. The pushbutton enclosure must be at ground potential and marked for identification of functions.

(10) All welding procedures and welding operator qualifications to be used on load sustaining members must be in accordance with ANSI/AWS D1.1, except as modified by ANSI/AWS D14.1.

[Statutory Authority: RCW 49.17.010, .040, .050, and .060. 16-09-085 (Order 15-08), § 296-155-54200, filed 04/19/16, effective, 05/20/16. Statutory Authority: RCW 49.17.010, .004, .050, and .060. 13-02-068 (Order 12-14), § 296-155-54200, filed 12/31/12, effective 02/01/13. Statutory Authority: RCWs 47.17.010, 49.17.040, 49.17.050, 49.17.440 and 49.17.060. 12-01-086 (Order 08-32), § 296-155-54200, filed 12/20/11, effective 02/01/12.]

WAC 296-155-54215 Overhead/bridge and gantry cranes--Operations.

(1) The operator must not engage in any practice that diverts their attention while actually engaged in operating the crane.

(2) The operator must do the following before leaving a cab-operated crane or a cab-operated carrier unattended:

(a) Remove any attached load and raise the hook to the highest allowable position.

(b) Place controllers or master switches in the “off” position and deenergize the main switch (crane disconnect) of the specific crane.

Note: Additional information relating to cranes being unattended is located in WAC 296-155-53400(52) of this part.

(3) **If power fails during operation, the operator must**:

(a) Move all clutch or other power controls to the “off” position;

(b) Prior to reuse of the crane you must check operating motions for proper direction.

(4) The operator must be familiar with the crane and its proper care. If adjustments or repairs are necessary, the operator must report the condition to the competent person. The next operator must be notified of the condition.

(5) You must not lower the load below the point where less than two full wraps of wire rope remain on the drum.

(6) When two or more cranes are used to lift a load, one qualified person must be in charge of the operation. This person must analyze the operation and instruct all personnel involved in the proper positioning, rigging of the load, and the movements to be made.

(7) The operator must not leave the position at the controls while the load is suspended over an area accessible to people.

(8) For cab and remote operated cranes, when the load or hook approaches near or over personnel, a warning signal must be sounded.

(9) **Hoist limit switch**.

(a) At the beginning of each operator's shift, you must test the upper limit switch of each hoist under no load.

(b) You must never use the hoist limit switch which controls the upper limit of travel of the load block as an operating control.

[Statutory Authority: RCW 49.17.010, .040, .050, and .060. 16-09-085 (Order 15-08), § 296-155-54215, filed 04/19/16, effective, 05/20/16. Statutory Authority: RCWs 47.17.010, 49.17.040, 49.17.050, 49.17.440 and 49.17.060. 12-01-086 (Order 08-32), § 296-155-54215, filed 12/20/11, effective 02/01/12.]

WAC 296-155-543 Derricks.

[Statutory Authority: RCWs 47.17.010, 49.17.040, 49.17.050, 49.17.440 and 49.17.060. 12-01-086 (Order 08-32), § 296-155-543, filed 12/20/11, effective 02/01/12.]

WAC 296-155-54300 Derricks--General.

(1) This section contains supplemental requirements for derricks, whether temporarily or permanently mounted; all sections of this part apply to derricks unless specified otherwise. A derrick is powered equipment consisting of a mast or equivalent member that is held at or near the end by guys or braces, with or without a boom, and its hoisting mechanism. The mast/equivalent member and/or the load is moved by the hoisting mechanism (typically base-mounted) and operating ropes. Derricks include: A-frame, basket, breast, Chicago boom, gin pole (except gin poles used for erection of communication towers), guy, shearleg, stiffleg, and variations of such equipment.

(2) **Derricks**. All derricks in use must meet the applicable requirements for design, construction, installation, inspection, testing, maintenance, and operation as prescribed in American National Standard Institute B30.6-2010, Safety Standard for Derricks. It is not the intent of this rule to require retrofitting of existing derricks. However, when an item is being modified, its performance needs to be reviewed by a qualified person and compared to the applicable sections of this rule. For modification requirements see WAC 296-155-53400 (58) and (59). For derricks manufactured prior to the effective date of this rule the design and construction criteria must meet at a minimum, ASME B30.6-1990.

(3) Derricks must be constructed to meet all stresses imposed on members and components when installed and operated in accordance with the manufacturer's/builder's procedures and within its rated capacity.

(4) You must follow the manufacturer's recommendations when installing, erecting, operating, maintenance and dismantling derricks. If the manufacturer's recommendations are not available, follow the requirements in ASME B30.6-2010.

(5) When derricks are erected/dismantled, written instructions by the manufacturer or qualified person and a list of the weights of each subassembly to be erected/dismantled must be at the site.

(6) You must establish procedures before beginning derrick erection/dismantling work to implement the instructions and adapt them to the particular needs of the site.

(7) A qualified person must supervise the erection and dismantling of the derrick.

(8) Derricks and their crane assembly parts/components must be inspected by an accredited certifier, prior to assembly and following erection of the derrick before placing the crane in service (see WAC 296-155-53212). Only inspected and preapproved components are allowed to be used in the assembly of a derrick.

(9) Prior to erecting a derrick on a nonstandard base/structural support, you must ensure that the engineering configuration of this base/structural support has been reviewed and acknowledged as acceptable by an independent registered professional structural engineer (RPSE), licensed under chapter 18.43 RCW.

(10) An RPSE must certify that the derrick foundation, structural supports and underlying soil provide adequate support for the derrick with its applied torsional and overturning moments and the horizontal and vertical forces.

(11) Derricks must be attached to bases/structural supports in compliance with the manufacturer's or an RPSE's instructions.

(12) Prior to installing a derrick that will be attached to an existing building, new construction, or structure, an RPSE must certify that the structural attachments to the building are designed to withstand the torsional and overturning moments and the horizontal and vertical forces created by the derrick to be installed.

(13) You must consult the engineer of record to verify that the host structure is capable of safely resisting the applied derrick forces, if this engineer is not available an RPSE must perform this verification.

(14) Derrick superstructures and machine deck (counterweight jib/counter-jibs) must be arranged to receive counterweights, made in accordance with the manufacturer's specifications for the specified jib or boom length, and to hold them in position. You must provide means to guard against shifting or dislodgement during derrick operation. Manufacturer's specified counterweight weights are not to be exceeded.

(15) For derricks utilizing ballast, bases must include provisions to support and position the ballast. You must provide means to guard against shifting or dislodgement of ballast during derrick operation.

(16) All electrical equipment must be properly grounded and protection must be provided against lightning per the manufacturer's recommendations or if not available, a registered professional electrical engineer.

(17) Each electrically powered derrick must have a main disconnect switch at or near the initial base of the derrick. This switch must have provisions for locking in the “off” position.

(18) You must locate or guard electrical equipment so that live parts are not exposed to inadvertent contact by personnel and equipment under normal operating conditions.

(19) You must protect electrical equipment from dirt, grease, oil, and moisture. Fixtures, wiring, and connections exposed to the weather must be of weather resistant type.

(20) Wiring must conform to the provisions of ANSI/NFPA 70 for temporary wiring. Motors, controls, switches, and other electrical equipment must meet applicable requirements of ANSI/NFPA 70. Hoists, slewing, trolley, and travel controllers must conform to ISO 7752-1, 2010.

(21) You must make provisions to guard against reversing of each motor due to reversed phase connections.

(22) Electrical circuits between the fixed and rotating portions of the derrick must pass through a slip ring assembly that will permit continuous rotation of the upper derrick structure in either direction, unless other means are provided to prevent damage to the electrical conductors.

(23) Individual overload protection must be provided for each motor.

(24) You must protect employees required to perform duties on the boom/jib of derricks against falling in accordance with Part C-1 of this chapter.

(25) You must not install advertising signs or similar panels on the derrick unless size, design, and positioning satisfy the manufacturer's recommendations, in the absence of the manufacturer's recommendations, you must obtain an RPE's written approval.

(26) For night operations, lighting must be adequate to illuminate the working radius while not interfering with the operator's vision.

(27) All welding procedures and welding operator qualifications for use in repair or alteration of load sustaining members must be in accordance with ANSI/AWS D14.3 or ANSI/AWS D1.1. Where special steels or other materials are used, the manufacturer or a qualified person must provide welding procedure instructions. The type of metal used for load sustaining members must be identified by the manufacturer. In the absence of the manufacturer you must use an RPSE.

[Statutory Authority: RCW 49.17.010, .040, .050, and .060. 16-09-085 (Order 15-08), § 296-155-54300, filed 04/19/16, effective, 05/20/16. Statutory Authority: RCWs 47.17.010, 49.17.040, 49.17.050, 49.17.440 and 49.17.060. 12-01-086 (Order 08-32), § 296-155-54300, filed 12/20/11, effective 02/01/12.]

WAC 296-155-54305 Derricks--Construction.

(1) **Guy derricks**.

(a) The minimum number of guys must be 6, with equal spacing, except where a qualified person or derrick manufacturer approves variations from these requirements and revises the rated capacity to compensate for such variations.

(b) You must not use guy derricks unless you have the following guy information from the manufacturer or a qualified person, when not available from the manufacturer:

(i) The number of guys.

(ii) The spacing around the mast.

(iii) The size, grade, and construction of rope to be used for each guy.

(c) For guy derricks manufactured after December 18, 1970, in addition to the information required in subsection (b) of this section, you must have the following guy information from the manufacturer or a qualified person, when not available from the manufacturer:

(i) The amount of initial sag or tension.

(ii) The amount of tension in guy line rope at anchor.

(d) The mast base must permit the mast to rotate freely with allowance for slight tilting of the mast caused by guy slack.

(e) The mast cap must:

(i) Permit the mast to rotate freely.

(ii) Withstand tilting and cramping caused by the guy loads.

(iii) Be secured to the mast to prevent disengagement during erection.

(iv) Be provided with means for attaching guy ropes.

(2) **Stiffleg derricks**.

(a) The mast must be supported in the vertical position by at least two stifflegs; one end of each must be connected to the top of the mast and the other end securely anchored.

(b) The stifflegs must be capable of withstanding the loads imposed at any point of operation within the load chart range.

(c) The mast base must:

(i) Permit the mast to rotate freely (when necessary).

(ii) Permit deflection of the mast without binding.

(d) You must prevent the mast from lifting out of its socket when the mast is in tension.

(e) The stiffleg connecting member at the top of the mast must:

(i) Permit the mast to rotate freely (when necessary).

(ii) Withstand the loads imposed by the action of the stifflegs.

(iii) Be secured so as to oppose separating forces.

(3) **Gin pole derricks**.

(a) Guy lines must be sized and spaced so as to make the gin pole stable in both boomed and vertical positions.

Exception:	*Where the size and/or spacing of guy lines do not result in the gin pole being stable in both boomed and vertical positions, you must ensure that the derrick is not used in an unstable position.*

(b) The base of the gin pole must permit movement of the pole (when necessary).

(c) The gin pole must be anchored at the base against horizontal forces (when such forces are present).

(4) **Chicago boom derricks**. The fittings for stepping the boom and for attaching the topping lift must be arranged to:

(a) Permit the derrick to swing at all permitted operating radii and mounting heights between fittings.

(b) Accommodate attachment to the upright member of the host structure.

(c) Withstand the forces applied when configured and operated in accordance with the manufacturer's/builder's procedures and within its rated capacity.

(d) Prevent the boom or topping lift from lifting out under tensile forces.

(5) **Anchoring and guying**.

(a) You must use load anchoring data developed by the manufacturer or a registered professional engineer.

(b) Guy derricks.

(i) You must anchor the mast base per the manufacturer's recommendations. In the absence of the manufacturer's recommendations you must use an RPSE.

(ii) The guys must be secured to the ground or other firm anchorage.

(iii) The anchorage and guying must be designed to withstand maximum horizontal and vertical forces encountered when operating within rated capacity with the particular guy slope and spacing specified for the application.

(c) Stiffleg derricks.

(i) The mast base and stifflegs must be anchored per the manufacturer's recommendations. In the absence of the manufacturer's recommendations you must use an RPSE.

(ii) The mast base and stifflegs must be designed to withstand maximum horizontal and vertical forces encountered when operating within rated capacity with the particular stiffleg spacing and slope specified for the application.

(d) Gin pole derricks.

(i) Side guys must be located so that they do not usurp the topping-lifted load;

(ii) Side guys must be evenly played out or in depending on their position relative to the boom foot pivot.

(6) **Swingers and hoists**.

(a) The boom, slewing mechanism, and hoists must be suitable for the derrick work intended and must be anchored to prevent displacement from the imposed loads.

(b) Base-mounted drum hoists. Base-mounted drum hoists must meet the requirements of ASME B30.7-2006, including the following:

(i) Load ratings must be the manufacturer's recommended single rope pull in pounds (kilograms), at a specified rate of speed, on a given size drum, and prescribed number of layers of rope.

(ii) Markings. Hoists are to be marked with the following identification for each drum:

(A) Load rating;

(B) Drum size consisting of barrel diameter, barrel length, and flange diameter;

(C) Rope size(s);

(D) Rope speed in feet per minute (meters per second);

(E) Rated power supply.

(iii) Attachments and anchorages for hoist bases must provide mounting of the hoist and must be capable of withstanding loads imposed by the hoist under operating conditions. The weight of the hoist and loads imposed by the load ropes must be provided for.

(iv) Location of drum hoists. Drum hoists must be located in a manner that provides proper rope spooling on the drums.

[Statutory Authority: RCW 49.17.010, .040, .050, and .060. 16-09-085 (Order 15-08), § 296-155-53405, filed 04/19/16, effective, 05/20/16. Statutory Authority: RCWs 47.17.010, 49.17.040, 49.17.050, 49.17.440 and 49.17.060. 12-01-086 (Order 08-32), § 296-155-54305, filed 12/20/11, effective 02/01/12.]

WAC 296-155-54320 Derricks--Operations.

(1) The operator must not engage in any practice that diverts their attention while actually engaged in operating the derrick.

(2) The operator must do the following before leaving the derrick unattended:

(a) Set down any attached load.

(b) Disengage clutches.

(c) Put the handles of controls in the "off" position.

(d) Open main switch or stop the engine.

(e) Engage the manual locking devices in the absence of automatic holding equipment.

> *Note: Additional information relating to cranes being unattended are located in WAC 296-155-53400(52) of this part.*

(3) If power fails during operation, the derrick hoist operator must:

(a) If practical, you must land the suspended load under brake control, according to the manufacturer's procedures or an RPE;

(b) Set all brakes or locking devices;

(c) Move all clutch or other power controls to the "off" position.

(4) The operator must be familiar with the derrick and its proper care. If adjustments or repairs are necessary, the operator must report the condition to the competent person, and must also notify the next operator.

(5) The operator must test all controls at the start of a new shift. If any controls do not operate properly, you must adjust or repair them before operations are begun.

(6) You must not lower the load below the point where less than two full wraps of rope remain on the drum.

(7) When slewing a derrick, you must avoid sudden starts and stops. Slewing speed must be such that the load does not swing out beyond the radius at which it can be controlled. You must use a tag or restraint line when slewing of the load is hazardous.

(8) **Use of winch heads**.

(a) You must not handle ropes on a winch head without the knowledge of the operator.

(b) While a winch head is being used, the operator must be within reach of the power unit control lever.

(9) **Securing the derrick**.

(a) When the boom is being held in a fixed position, dogs, pawls, or other positive holding mechanisms on the boom hoist must be engaged.

(b) When taken out of service for 30 days or more, you must secure the derrick according to the manufacturer's recommendations. In the absence of the manufacturer's recommendations you must use an RPE.

[Statutory Authority: RCW 49.17.010, .040, .050, and .060. 16-09-085 (Order 15-08), § 296-155-54320, filed 04/19/16, effective, 05/20/16. Statutory Authority: RCWs 47.17.010, 49.17.040, 49.17.050, 49.17.440 and 49.17.060. 12-01-086 (Order 08-32), § 296-155-54320, filed 12/20/11, effective 02/01/12.]

WAC 296-155-544 Additional requirements for other types of cranes/derricks.

[Statutory Authority: RCWs 47.17.010, 49.17.040, 49.17.050, 49.17.440 and 49.17.060. 12-01-086 (Order 08-32), § 296-155-544, filed 12/20/11, effective 02/01/12.]

WAC 296-155-54400 Floating cranes/derricks and land cranes/derricks on barges.

(1) This section contains supplemental requirements for floating cranes/derricks and land cranes/derricks on barges, pontoons, vessels or other means of flotation (i.e., vessel/flotation device). The sections of this part apply to floating cranes/derricks and land cranes/derricks on barges, pontoons, vessels or other means of flotation, unless specified otherwise. The requirements of this section do not apply when using jacked barges when the jacks are deployed to the river, lake, or sea bed and the barge is fully supported by the jacks.

(2) **General requirements**. The requirements in subsections (3) through (10) of this section apply to both floating cranes/derricks and land cranes/derricks on barges, pontoons, vessels or other means of flotation.

(3) **Work area control**.

(a) The requirements of WAC 296-155-53400(42) (work area control) apply, except for WAC 296-155-53400 (42)(b)(ii).

(b) You must either:

(i) Erect and maintain control lines, warning lines, railings or similar barriers to mark the boundaries of the hazard areas; or

(ii) Clearly mark the hazard areas by a combination of warning signs (such as, "Danger - Swing/Crush Zone") and high visibility markings on the equipment that identify the hazard areas. In addition, you must train each employee to understand what these markings signify.

(4) **Keeping clear of the load**. WAC 296-155-53400(43) does not apply.

(5) **Additional safety devices**. In addition to the safety devices listed in WAC 296-155-53410, the following safety devices are required:

(a) Barge, pontoon, vessel or other means of flotation list and trim indicator. The safety device must be located in the cab or, when there is no cab, at the operator's station.

(b) Positive equipment house lock.

(c) Wind speed and direction indicator. A competent person must determine if wind is a factor that needs to be considered; if wind needs to be considered, you must use a wind speed and direction indicator.

(6) **Operational aids**.

(a) An anti two-block device is required only when hoisting personnel or hoisting over an occupied cofferdam or shaft.

(b) WAC 296-155-53412 (3)(h) (Load weighing and similar devices) does not apply to dragline, clamshell (grapple), magnet, drop ball, container handling, concrete bucket, and pile driving work performed under this section.

(7) **Accessibility of procedures applicable to equipment operation**. If the crane/derrick has a cab, the requirements of WAC 296-155-53400(6) apply. If the crane/derrick does not have a cab, you must ensure that:

(a) Rated capacities (load charts) are posted at the operator's station. If the operator's station is moveable (such as with pendant-controlled equipment), the load charts are posted on the equipment.

(b) Procedures applicable to the operation of the equipment (other than load charts), recommended operating speeds, special hazard warnings, instructions and operators manual, must be readily available on board the vessel/flotation device.

(8) **Inspections**. In addition to meeting the requirements of WAC 296-155-53405 for inspecting the crane/derrick, you must inspect the barge, pontoons, vessel or other means of flotation used to support a floating crane/derrick or land crane/derrick to ensure that:

(a) Shift. For each shift inspection, the means used to secure/attach the equipment to the vessel/flotation device is in proper condition, including wear, corrosion, loose or missing fasteners, defective welds, and (when applicable) insufficient tension.

(b) Monthly. For each monthly inspection:

(i) The means used to secure/attach the equipment to the vessel/flotation device is in proper condition, including inspection for wear, corrosion, and (when applicable) insufficient tension.

(ii) The vessel/flotation device is not taking on water.

(iii) The deck load is properly secured.

(iv) The vessel/flotation device is watertight based on the condition of the chain lockers, storage, fuel compartments, and hatches.

(v) The firefighting and lifesaving equipment is in place and functional.

(c) The shift and monthly inspections are conducted by a competent person, and:

(i) If any deficiency is identified, an immediate determination is made by a qualified person whether the deficiency constitutes a hazard.

(ii) If the deficiency is determined to constitute a hazard, the vessel/flotation device is removed from service until the deficiency has been corrected.

(d) Annual: External vessel/flotation device inspection. For each annual inspection:

(i) The external portion of the barge, pontoons, vessel or other means of flotation used is inspected annually by a qualified person who has expertise with respect to vessels/flotation devices and that the inspection includes the following items:

(A) The items identified in this subsection.

(B) Cleats, bitts, chocks, fenders, capstans, ladders, and stanchions, for significant corrosion, wear, deterioration, or deformation that could impair the function of these items.

(C) External evidence of leaks and structural damage; evidence of leaks and damage below the waterline may be determined through internal inspection of the vessel/flotation device.

(D) 4-corner draft readings.

(E) Firefighting equipment for serviceability.

(ii) Rescue skiffs, lifelines, work vests, life preservers and ring buoys are inspected for proper condition.

(iii) If any deficiency is identified, an immediate determination is made by the qualified person whether the deficiency constitutes a hazard or, though not yet a hazard, needs to be monitored in the monthly inspections.

(A) If the qualified person determines that the deficiency constitutes a hazard, the vessel/flotation device is removed from service until it has been corrected. See requirements in WAC 296-155-53400(68).

(B) If the qualified person determines that, though not presently a hazard, the deficiency needs to be monitored, the deficiency is checked in the monthly inspections.

(e) 4-year: Internal vessel/flotation device inspection. For each 4-year inspection:

(i) A marine engineer, marine architect, licensed surveyor, or other qualified person who has expertise with respect to vessels/flotation devices surveys the internal portion of the barge, pontoons, vessel, or other means of flotation.

(ii) If the surveyor identifies a deficiency, an immediate determination is made by the surveyor as to whether the deficiency constitutes a hazard or, though not yet a hazard, needs to be monitored in the monthly or annual inspections, as appropriate.

(A) If the surveyor determines that the deficiency constitutes a hazard, the vessel/flotation device is removed from service until it has been corrected.

(B) If the surveyor determines that, though not presently a hazard, the deficiency needs to be monitored, the deficiency is checked in the monthly or annual inspections, as appropriate.

(f) Documentation. The monthly and annual inspections required in (b) and (d) of this subsection are documented in accordance with WAC 296-155-53405, respectively, and that the 4-year inspection required in this section is documented, except that you must retain except that the documentation for that inspection for a minimum of 4 years. You must make all such documents available, during the applicable document retention period, to all persons who conduct inspections in accordance with WAC 296-155-53405.

(9) **Working with a diver**. You must meet the following additional requirements when working with a diver in the water:

(a) If a crane/derrick is used to get a diver into and out of the water, you must not use it for any other purpose until the diver is back on board. When used for more than one diver, you must not use it for any other purpose until all divers are back on board.

(b) The operator must remain at the controls of the crane/derrick at all times.

(c) In addition to the requirements in WAC 296-155-53406 (Signals), either:

(i) A clear line of sight must be maintained between the operator and dive tender; or

(ii) The signals between the operator and dive tender must be transmitted electronically.

(d) The means used to secure the crane/derrick to the vessel/flotation device (see subsection (12)(e) of this section) must not allow any amount of shifting in any direction.

(10) Barge, pontoons, vessel or other flotation manufacturer's specifications and limitations.

(a) You must ensure that the barge, pontoons, vessel, or other means of flotation must be capable of withstanding imposed environmental, operational and in-transit loads when used in accordance with the manufacturer's specifications and limitations.

(b) You must ensure that the manufacturer's specifications and limitations with respect to environmental, operational, and in-transit loads for a barge, pontoon, vessel, or other means of flotation are not exceeded or violated.

(c) When the manufacturer's specifications and limitations are unavailable, you must ensure that the specifications and limitations established by a marine engineer, marine architect, licensed surveyor, or other qualified person who has expertise with respect to environmental, operational and in-transit loads for the barge, pontoons, vessel, or other means of flotation are not exceeded or violated.

(11) **Floating cranes/derricks**. For equipment designed by the manufacturer (or employer) for marine use by permanent attachment to barges, pontoons, vessels or other means of flotation:

(a) Load charts.

(i) You must not exceed the manufacturer load charts applicable to operations on water. When using these charts, you must comply with all parameters and limitations (such as dynamic and environmental parameters) applicable to the use of the charts.

(ii) You must ensure that load charts take into consideration a minimum wind speed of 40 miles per hour.

(b) You must ensure that the requirements for maximum allowable list and maximum allowable trim as specified in Table 6 of this section are met.

Table 6		
Equipment designed for marine use by permanent attachment (other than derricks):		
Rated Capacity	Maximum Allowable List	Maximum Allowable Trim
25 tons or less	5 degrees	5 degrees
Over 25 tons	7 degrees	7 degrees
Derricks designed for marine use by permanent attachment:		
Any rated capacity	10 degrees	10 degrees

(c) You must ensure that the equipment is stable under the conditions specified in Tables 7 and 8 of this section. (*Note*: *Freeboard is the vertical distance between the water line and the main deck of the vessel.)*

Table 7		
Operated at	**Wind speed**	**Minimum Freeboard**
Rated capacity	60 mph.	2 ft.
Rated capacity plus 25%	60 mph.	2 ft.
High boom, no load	60 mph.	2 ft.

Table 8	
For backward stability of the boom:	
Operated at	Wind speed
High boom, no load, full back list (least stable condition)	90 mph

(d) If the equipment is employer-made, you must not use it unless you have documents demonstrating that the load charts and applicable parameters for use meet the requirements of (a) through (c) of this subsection. Such documents must be signed by a registered professional engineer who is a qualified person with respect to the design of this type of equipment (including the means of flotation).

(e) You must ensure that the barge, pontoons, vessel or other means of flotation used:

(i) Are structurally sufficient to withstand the static and dynamic loads of the crane/derrick when operating at the crane/derrick's maximum rated capacity with all planned and actual deck loads and ballasted compartments.

(ii) Have a subdivided hull with one or more longitudinal watertight bulkheads for reducing the free-surface effect.

(iii) Have access to void compartments to allow for inspection and pumping.

(12) **Land cranes/derricks**. For land cranes/derricks used on barges, pontoons, vessels or other means of flotation, you must ensure that:

(a) The rated capacity of the equipment (including, but not limited to, modification of load charts) applicable for use on land is reduced to:

(i) Account for increased loading from list, trim, wave action, and wind.

(ii) Be applicable to a specified location(s) on the specific barge, pontoons, vessel or other means of flotation that will be used, under the environmental conditions expected and encountered.

(iii) The conditions required in (c) and (d) of this subsection are met.

(b) The rated capacity modification required in (a) of this subsection is performed by the equipment manufacturer, or a qualified person who has expertise with respect to both land crane/derrick capacity and the stability of vessels/flotation devices.

(c) For list and trim.

(i) The maximum allowable list and the maximum allowable trim for the barge, pontoon, vessel or other means of flotation must not exceed the amount necessary to ensure that the conditions in (d) of this subsection are met. In addition, the maximum allowable list and the maximum allowable trim does not exceed the least of the following: 5 degrees, the amount specified by the crane/derrick manufacturer, or, when, an amount is not so specified, the amount specified by the qualified person.

(ii) The maximum allowable list and the maximum allowable trim for the land crane/derrick does not exceed the amount specified by the crane/derrick manufacturer, or, when, an amount is not so specified, the amount specified by the qualified person.

(d) For the following conditions:

(i) All deck surfaces of the barge, pontoons, vessel or other means of flotation used are above water.

(ii) The entire bottom area of the barge, pontoons, vessel or other means of flotation used is submerged.

(e) Physical attachment, corralling, rails system and centerline cable system meet the requirements in Option (1), Option (2), Option (3), or Option (4) of this section, and that whichever option is used also meets the requirements of (e)(v) of this subsection.

(i) Option (1) - Physical attachment. The crane/derrick is physically attached to the barge, pontoons, vessel or other means of flotation. Methods of physical attachment include crossed-cable systems attached to the crane/derrick and vessel/flotation device, bolting or welding the crane/derrick to the vessel/flotation device, strapping the crane/derrick to the vessel/flotation device with chains, or other methods of physical attachment.

(ii) Option (2) - Corralling. The crane/derrick is prevented from shifting by installing barricade restraints (i.e., a corralling system). You must ensure that corralling systems do not allow the equipment to shift by any amount of shifting in any direction.

(iii) Option (3) - Rails. You must prevent the crane/derrick from shifting by being mounted on a rail system. You must ensure that rail clamps and rail stops are used unless the system is designed to prevent movement during operation by other means.

(iv) Option (4) - Centerline cable system. The crane/derrick is prevented from shifting by being mounted to a wire rope system. You must ensure that the wire rope system meets the following requirements:

(A) The wire rope and attachments are of sufficient size and strength to support the side load of crane/derrick.

(B) The wire rope is attached physically to the vessel/flotation device.

(C) The wire rope is attached to the crane/derrick by appropriate attachment methods (such as shackles or sheaves) on the undercarriage, and that the method used will allow the crew to secure the crane/derrick from movement during operation and to move the crane/derrick longitudinally along the vessel/flotation device for repositioning.

(D) Means are installed to prevent the crane/derrick from passing the forward or aft end of the wire rope attachments.

(E) The crane/derrick is secured from movement during operation.

(v) The systems/means used to comply with Option (1), Option (2), Option (3), or Option (4) of this section are designed by a marine engineer, registered professional engineer familiar with floating crane/derrick design, or qualified person familiar with floating crane/derrick design.

(f) Exception. For mobile auxiliary cranes used on the deck of a floating crane/derrick, the requirement specified by (e) of this subsection to use Option (1), Option (2), Option (3), or Option (4) does not apply when the employer demonstrates implementation of a plan and procedures that meet the following requirements:

(i) A marine engineer or registered professional engineer familiar with floating crane/derrick design develops and signs a written plan for the use of the mobile auxiliary crane.

(ii) The plan is designed so that the applicable requirements of this section are met despite the position, travel, operation, and lack of physical attachment (or corralling, use of rails or cable system) of the mobile auxiliary crane.

(iii) The plan specifies the areas of the deck where the mobile auxiliary crane is permitted to be positioned, travel, and operate, and the parameters and limitations of such movements and operation.

(iv) The deck is marked to identify the permitted areas for positioning, travel, and operation.

(v) The plan specifies the dynamic and environmental conditions that must be present for use of the plan.

(vi) If the dynamic and environmental conditions in (f)(v) of this subsection are exceeded, the mobile auxiliary crane is attached physically or corralled in accordance with Option (1), Option (2) or Option (4) of (e) of this subsection.

(g) The barge, pontoons, vessel or other means of flotation used:

(i) Are structurally sufficient to withstand the static and dynamic loads of the crane/derrick when operating at the crane/derrick's maximum rated capacity with all anticipated deck loads and ballasted compartments.

(ii) Have a subdivided hull with one or more longitudinal watertight bulkheads for reducing the free surface effect.

(iii) Have access to void compartments to allow for inspection and pumping.

[Statutory Authority: RCW 49.17.010, .040, .050, and .060. 16-09-085 (Order 15-08), § 296-155-54400, filed 04/19/16, effective, 05/20/16. Statutory Authority: RCWs 47.17.010, 49.17.040, 49.17.050, 49.17.440 and 49.17.060. 12-01-086 (Order 08-32), § 296-155-54400, filed 12/20/11, effective 02/01/12.]

WAC 296-155-54405 Dedicated pile drivers.

(1) The provisions of Part L of this chapter apply to dedicated pile drivers, except as specified in this section.

(2) WAC 296-155-53412 (3)(d) (Anti two-blocking device) does not apply.

(3) WAC 296-155-53412 (3)(h) (Load weighing and similar devices) applies only to dedicated pile drivers manufactured after the effective date of this section.

[Statutory Authority: RCWs 47.17.010, 49.17.040, 49.17.050, 49.17.440 and 49.17.060. 12-01-086 (Order 08-32), § 296-155-54405, filed 12/20/11, effective 02/01/12.]

WAC 296-155-54410 Sideboom cranes.

(1) The provisions of this standard apply, except WAC 296-155-53400(34) (Ground conditions), WAC 296-155-53410 (Safety devices), WAC 296-155-53412 (Operational aids), WAC 296-155-531 through 296-155-53214 (crane certifier accreditation and crane certification) and WAC 296-155-53300 (Operator qualifications and certification).

(2) Sideboom cranes manufactured prior to the effective date of this section must meet the requirements of SAE J743a-1964. Sideboom cranes mounted on wheel or crawler tractors manufactured after the effective date of this section must meet the requirements of ASME B30.14-2010.

[Statutory Authority: RCW 49.17.010, .004, .050, and .060. 13-02-068 (Order 12-14), § 296-155-54410, filed 12/31/12, effective 02/01/13. Statutory Authority: RCWs 47.17.010, 49.17.040, 49.17.050, 49.17.440 and 49.17.060. 12-01-086 (Order 08-32), § 296-155-54410, filed 12/20/11, effective 02/01/12.]

WAC 296-155-547 Personnel lifting platforms (attached and suspended) Scope.

(1) This rule applies to the lifting, lowering, and transporting of personnel using personnel platforms connected to cranes or derricks that are designed under ASME B30 series. Personnel platforms can be suspended from the crane or derrick by wire rope, or attached to the boom of the crane or derrick. Using articulating boom cranes with suspended platforms is not allowed. The use of attached work platforms to the articulating boom crane must be approved by the crane manufacturer. Cranes and derricks are designed and intended for material handling, and are not required to meet the same design standards as manlifts, aerial lifts, bucket trucks, and other conventional personnel-lifting equipment. The lifting or lowering of personnel using material handling cranes and derricks is prohibited unless all of the applicable requirements of WAC 296-155-547 through 296-155-55405 are met. Digger derricks must follow the requirements in ANSI/ASSE A10.31-2006 when hoisting personnel. Machines that are designed to both ASME B30 series and ANSI/SIA A92.2, Vehicle Mounted Elevating and Rotating Aerial Devices must follow the requirements in ANSI/SIA A92.2-2009 when hoisting personnel.

(2) The use of cranes or derricks to hoist employees is prohibited except where the employer demonstrates that the erection, use, and dismantling of conventional means of reaching the work area, such as a personnel hoist, ladder, stairway, aerial lift, elevating work platform, or scaffold, would be more hazardous, or is not possible because of the project's structural design or worksite conditions.

[Statutory Authority: RCWs 47.17.010, 49.17.040, 49.17.050, 49.17.440 and 49.17.060. 12-01-086 (Order 08-32), § 296-155-547, filed 12/20/11, effective 02/01/12.]

WAC 296-155-548 Design and installation requirements for personnel lifting systems.

[Statutory Authority: RCWs 47.17.010, 49.17.040, 49.17.050, 49.17.440 and 49.17.060. 12-01-086 (Order 08-32), § 296-155-548, filed 12/20/11, effective 02/01/12.]

WAC 296-155-54800 Design of platforms and suspension systems.

(1) Employers that manufacture personnel platforms and/or their suspension systems must be designed, constructed and tested according to ASME B30.23-2005, Personnel Lifting Systems. The design and manufacturer's specifications must be made by a registered professional engineer. Personnel platforms manufactured prior to the effective of this section must comply with ASME B30.23-1998.

(2) Only the crane/derrick manufacturer may approve the design and installation procedures for platform mounting attachment points on lattice type boom cranes and lattice type boom extensions. The design and installation procedures, for platform mounting attachment points on other types of cranes/derricks must be approved by their manufacturer or an RPE. All approvals must be in writing.

(3) Platform mounting attachments on the crane/derrick must be designed to protect against disengagement during lifting operation.

(4) The system used to connect the personnel platform to the equipment must allow the platform to remain within 10 degrees of level, regardless of boom angle.

(5) The suspension system must be designed to minimize tipping of the platform due to movement of employees occupying the platform.

(6) The personnel platform itself (excluding the guardrail system and personal fall arrest system anchorages), must be capable of supporting, without failure, its own weight and at least 5 times the maximum intended load.

(7) The personnel platform must be equipped with a guardrail system which meets the requirements of Part C-1 of this chapter, and must be enclosed at least from the toeboard to mid-rail with either solid construction material or expanded metal having openings no greater than one-half inch (1.27 cm). Points to which personal fall arrest systems are attached must meet the anchorage requirements in Part C-1 of this chapter.

(8) You must install a grab rail inside the entire perimeter of the personnel platform except for access gates/doors.

(9) **Access gates/doors**. If installed, access gates/doors of all types (including swinging, sliding, folding, or other types) must:

(a) Not swing outward. If due to the size of the personnel platform, such as a one-person platform, it is infeasible for the door to swing inward and allow safe entry for the platform occupant, then the access gate/door may swing outward.

(b) Be equipped with a device that prevents accidental opening.

(10) Headroom must be sufficient to allow employees to stand upright in the platform.

(11) In addition to the use of hard hats, employees must be protected by overhead protection on the personnel platform when employees are exposed to falling objects. The platform overhead protection must not obscure the view of the operator or platform occupants (such as wire mesh that has up to one-half inch openings), unless full protection is necessary.

(12) All edges exposed to employee contact must be smooth enough to prevent injury.

(13) An identification plate must be located on the platform. The location must protect against damage and allow easy viewing from both interior (while hoisted) and exterior (while not hoisted) of the platform.

(14) **The inspection plate must display the following information**:

(a) Manufacturer's name and address;

(b) Platform rating in terms of weight and personnel;

(c) Platform identification number;

(d) Suspension system description for suspended platforms, or the intended crane/derrick manufacturer and model for boom attached platforms;

(e) Weight of the empty platform and its suspension system;

(f) Date the platform was manufactured;

(g) Certification of compliance to the design, construction, and testing requirements of ASME B30.23-2005, Personnel Lifting Systems;

(h) Listing of any unique operational environments for which the platform has been designed.

(15) For suspended platforms, the suspension system must be sized by the platform manufacturer, and its installed sling angle established, so as not to cause damage to the platform. Suspension systems must comply with the following:

(a) Hooks and other detachable devices.

(i) Hooks used in the connection between the hoist line and the personnel platform (including hooks on overhaul ball assemblies, lower load blocks, bridle legs, or other attachment assemblies or components) must be:

(A) Of a type that can be closed and locked, eliminating the throat opening.

(B) Closed and locked when attached.

(ii) Shackles used in place of hooks must be of the alloy anchor type, with either:

(A) A bolt, nut and retaining pin, in place; or

(B) Of the screw type, with the screw pin secured from accidental removal.

(iii) Where other detachable devices are used, they must be of the type that can be closed and locked to the same extent as the devices addressed in subsection (a) of this section. You must close and lock devices when attached.

(b) When a rope bridle is used to suspend the personnel platform, each bridle leg must be connected to a master link or shackle (see (a) of this subsection) in a manner that ensures that the load is evenly divided among the bridle legs.

(c) Eyes in wire rope slings shall be fabricated with thimbles.

(d) Wire rope sling suspension systems with pored socket end connections, if used, must be designed in accordance with the manufacturer's or qualified person's application instructions.

(e) All sling suspension systems must utilize a master link for attachment to the crane/derrick hook or bolt type shackle with cotter pin.

(f) You must not use synthetic webbing or natural or synthetic fiber rope slings for suspension systems.

(g) Suspension system legs must be designed and sized according to ASME B30.23-2005.

(h) Wire rope sling suspension systems must have each leg of the system permanently marked with the rated load of the leg. The master link in the system must be permanently marked with the suspension system's rated load and identification as a personnel lifting platform suspension component.

(i) Rigging hardware (including wire rope, shackles, rings, master links, and other rigging hardware) and hooks must be capable of supporting, without failure, at least 5 times the maximum intended load applied or transmitted to that component. A sling made from rotation resistant rope is prohibited.

(j) You must use bridles and associated rigging for suspending the personnel platform only for the platform and the necessary employees, their tools and materials necessary to do their work, and you must not use it for any other purpose when not hoisting personnel.

(16) Overhead protection, when provided for a platform, must allow for a clear view of the crane/derrick components directly overhead, from any position in the platform. Any openings designed in the overhead protection must not allow a sphere of greater than 0.5 in (13 mm) to pass through.

(17) All welding of the personnel platform and its components must be performed by a certified welder familiar with the weld grades, types and material specified in the platform design.

(18) Bolted connections of load sustaining members or components of the platform must be in accordance with the AISC Specification for Structural Joints Using ASTM A 325 or A 490 Bolts.

(19) You must provide a weatherproof compartment suitable for storage of the operator's manual and assorted other documents, or a weatherproof placard displaying the operator's manual, and readable from the platform, when motion controls that are operational from the platform are installed.

(20) Motion controls, if installed on the platform, must:

(a) Be clearly identified as to their function;

(b) Be protected from inadvertent actuation;

(c) Be inside the platform and readily accessible to the operator;

(d) When possible be oriented and move in the approximate direction of the function that they control;

(e) Return to their neutral position and stop all motion when released.

(21) **Boom motion controls, if provided, must additionally**:

(a) Include a control that must be continuously activated for controls to be operational;

(b) Include an emergency stop control that does not require continuous actuation for a stop condition;

(c) Have motion controls, accessible at ground level, that can override platform controls.

[Statutory Authority: RCW 49.17.010, .040, .050, and .060. 16-09-085 (Order 15-08), § 296-155-54800, filed 04/19/16, effective, 05/20/16. Statutory Authority: RCWs 47.17.010, 49.17.040, 49.17.050, 49.17.440 and 49.17.060. 12-01-086 (Order 08-32), § 296-155-54800, filed 12/20/11, effective 02/01/12.]

WAC 296-155-549 Personnel lifting hoisting equipment.

[Statutory Authority: RCWs 47.17.010, 49.17.040, 49.17.050, 49.17.440 and 49.17.060. 12-01-086 (Order 08-32), § 296-155-549, filed 12/20/11, effective 02/01/12.]

WAC 296-155-54900 Crane or derrick requirements for personnel lifting.

(1) Cranes and derricks must meet the requirements in this part and the applicable crane/derrick ASME B30 volume in addition to the following requirements in this section.

(2) You must **not** use the following cranes/derricks to lift personnel:

(a) Articulating boom cranes, unless approved by the manufacturer;

(b) Cranes or derricks with pendant supported, jib type boom extensions without positive stops.

(3) The crane or derrick being used to hoist the personnel platform must meet the following requirements:

(a) Live boom or live load capabilities allowing free fall are removed for the period of personnel lifting;

(b) An operational anti two-block device or upper travel limit switch is installed on the hoisting systems;

(c) On cranes and derricks with variable angle booms there is a boom angle indicator that is clearly visible to the operator;

(d) Equipped with a boom hoist limiting device;

(e) Cranes with a luffing jib must be equipped with:

(i) A jib angle indicator, readily visible to the operator.

(ii) A jib hoist limiting device.

(f) Cranes with telescoping booms must have a boom length indicator, readable from the operator's station;

(g) Articulating cranes must be equipped with a properly functioning automatic overload protection device. Using articulating boom cranes with suspended platforms is **not** allowed. The use of attached work platforms to the articulating boom crane must be approved by the crane manufacturer;

(h) Has automatic brakes on the crane/derrick, so motions stop when the operating controls are released;

(i) Has a holding device, such as a load hold check valve, that will prevent uncontrolled movement of the crane/derrick if a system fails, on hydraulic or pneumatic systems;

(j) Has a way to prevent hydraulic or pneumatic outriggers or stabilizers, if these are a part of the crane/derrick, from retracting if the hydraulic or pneumatic line fails;

(k) The load line hoist drum must have a system, other than the load line hoist brake, which regulates the lowering rate of speed of the hoist mechanism. You must use this system or device when hoisting personnel;

(l) Proper operation required. You must not begin personnel hoisting operations unless the devices listed in this section are in proper working order. If a device stops working properly during such operations, the operator must safely stop operations. You must not resume personnel hoisting operations until the device is again working properly. Alternative measures are not permitted.

(4) Direct attachment of a personnel platform to a luffing jib is prohibited.

(5) The base of the crane must be level in accordance with manufacturer's recommendations and in no case greater than one percent of level. The crane must be located on firm footing and a qualified person must determine that the footing is sufficiently firm and stable. Outriggers or stabilizers must be extended, blocked and locked according to manufacturer's recommendations, if the crane is equipped with them, the amount of the extension must be the same for all outriggers or stabilizers.

(6) The total weight of the lifted load, including rigging, platform, personnel, tools, and material must not exceed 50% of the crane's rated capacity for the radius and configuration, under the planned conditions of operations (except during testing as outlined in WAC 296-155-551).

(7) When the occupied personnel platform is in a stationary working position, the load and boom hoist brakes, swing brakes, and operator actuated secondary braking and locking features (such as pawls or dogs) or automatic secondary brakes must be engaged.

(8) You must inspect the area where the crane/derrick will be set up and look for:

(a) Overhead obstructions;

(b) Electrical lines;

(c) Hazardous locations;

(d) Inadequate surface area;

(e) Inadequate support to withstand all force imposed, wind, weather, and unstable conditions; and

(f) Other potentially hazardous conditions.

(9) Hooks on headache ball assemblies, lower load blocks, or other attachment assemblies must be of a type that can be closed and locked, eliminating the hook throat opening. Alternatively, an alloy anchor type shackle with a bolt, nut and retaining pin may be used.

[Statutory Authority: RCW 49.17.010, .040, .050, and .060. 16-09-085 (Order 15-08), § 296-155-54900, filed 04/19/16, effective, 05/20/16. Statutory Authority: RCWs 47.17.010, 49.17.040, 49.17.050, 49.17.440 and 49.17.060. 12-01-086 (Order 08-32), § 296-155-54900, filed 12/20/11, effective 02/01/12.]

WAC 296-155-551 Inspections, maintenance and testing.

[Statutory Authority: RCWs 47.17.010, 49.17.040, 49.17.050, 49.17.440 and 49.17.060. 12-01-086 (Order 08-32), § 296-155-551, filed 12/20/11, effective 02/01/12.]

WAC 296-155-55100 Inspections on cranes and personnel platforms.

(1) A qualified person must inspect personnel platforms before use and at each new job site to make sure the requirements of WAC 296-155-548 through 296-155-55305 are met.

(2) A qualified person must inspect all items in Table 9 at least once each day, before use.

(3) You must correct any hazardous conditions before using the platform.

(4) As applicable, perform a frequent inspection on the crane/derrick in accordance with WAC 296-155-53405.

(5) You must make and keep dated inspection records for the crane and the personnel platform on file for the duration of the personnel lift operation.

Table 9 Inspection Checklist for Personnel Lifting Platforms	
Items to check:	**How Often:**
Markings (all information legible): • Platform. • Suspension system.	Once each day, before use.
Structure: • Load supporting welds/bolts. • Load supporting members. • Barrier from toe board to intermediate rail. • Hand rail. • Fall protection device anchorage points • Gate locking mechanisms. • Platform flooring. • Suspension attachment points.	
Attachment mechanisms: • Pins/ears/bolt-ups/eyes • Wire rope/chain/rigid leg • Master links	
Special purpose items: (Overhead protection, flotation, platform controls)	

(6) You must not use the platform until safety deficiencies identified during the inspection have been evaluated, corrected, and approved by a qualified person.

[Statutory Authority: RCW 49.17.010, .040, .050, and .060. 16-09-085 (Order 15-08), § 296-155-55100, filed 04/19/16, effective, 05/20/16. Statutory Authority: RCW 47.17.010, 49.17.040, 49.17.050, 49.17.440 and 49.17.060. 12-01-086 (Order 08-32), § 296-155-55100, filed 12/20/11, effective 02/01/12.]

WAC 296-155-55105 Adjustments and repairs on personnel platforms.

(1) Any adjustments or repairs to the platform must be done by a qualified person.

(2) Adjustments or repairs to the suspension system must be done by a qualified person.

(3) Replacement parts and repairs must be equal to or exceed the original equipment specifications.

(4) The manufacturer or a qualified person must approve any modifications, in writing, before they are made.

(5) You must maintain and keep records of any repairs to the structural components of the platform.

(6) All welding of the personnel platform and its components must be performed by a certified welder familiar with the weld grades, types and material specified in the platform design.

[Statutory Authority: RCW 49.17.010, .040, .050, and .060. 16-09-085 (Order 15-08), § 296-155-55105, filed 04/19/16, effective, 05/20/16. Statutory Authority: RCW 47.17.010, 49.17.040, 49.17.050, 49.17.440 and 49.17.060. 12-01-086 (Order 08-32), § 296-155-55105 filed 12/20/11, effective 02/01/12.]

WAC 296-155-55110 Proof load test platforms and rigging.

(1) You must proof load test the platform and rigging at each new location before lifting personnel. This may be done at the same time as the trial lift.

(a) Test as follows:

(i) Test to 125% of the platform's rated capacity.

(ii) You must lower the platform by controlled load lowering, braked, and held in a suspended position for a minimum of 5 minutes with the test load evenly distributed on the platform.

(b) Do the following after proof load testing:

(i) A qualified person must inspect the platform and rigging to determine if the test has passed.

(ii) You must correct any deficiencies that pose a safety hazard prior to lifting personnel.

(iii) You must perform another test after any deficiencies are corrected.

(c) Keep the most recent proof load testing records available at the job site.

(d) You must not conduct personnel hoisting until a qualified person determines that the platform and rigging has successfully passed the proof load test.

(2) You must proof load test the platform and rigging after any structural repair or modification, before lifting personnel.

(a) Test suspended platforms in the following order:

(i) Test to 150% of the platform's rated capacity;

(ii) You must raise the loaded platform, then lower it at a speed of at least 100 ft/min;

(iii) Bring the platform to a stop by using the crane/derrick brakes;

(iv) The platform must hang for at least 5 minutes;

(v) A qualified person must inspect the platform and rigging;

(vi) You must correct any deficiencies;

(vii) You must perform another test after any deficiencies are corrected.

(b) Test attached platforms in the following order:

(i) Test to 125% of the platform's rated capacity;

(ii) Hold the platform suspended for 5 minutes with the test load evenly distributed on the platform;

(iii) A qualified person must inspect the platform and rigging;

(iv) You must correct any deficiencies;

(v) You must perform another test after any deficiencies are corrected.

(c) You must keep and make available the most recent proof load testing records at the job site.

[Statutory Authority: RCW 49.17.010, .040, .050, and .060. 16-09-085 (Order 15-08), § 296-155-55110, filed 04/19/16, effective, 05/20/16. Statutory Authority: RCW 49.17.010, .004, .050, and .060. 13-02-068 (Order 12-14), § 296-155-55110, filed 12/31/12, effective 02/01/13. Statutory Authority: RCWs 47.17.010, 49.17.040, 49.17.050, 49.17.440 and 49.17.060. 12-01-086 (Order 08-32), § 296-155-55110, filed 12/20/11, effective 02/01/12.]

WAC 296-155-55115 Trial lift.

(1) You must perform a trial lift with the personnel platform, on each shift before lifting personnel, to check the following:

(a) Crane/derrick setup and configuration is correct;

(b) Load capacities are adequate;

(c) No hazardous interferences exist;

(d) The operator's operational competence.

(2) You must make a trial lift with the unoccupied personnel platform loaded at least to the anticipated lift-weight from ground level, or any other location where employees will enter the platform, to each location at which the platform is to be hoisted and positioned. Where there is more than one location to be reached from a single set-up position, you must perform either individual trial lifts for each location, or a single trial lift, in which the platform is moved sequentially to each location, the method selected must be the same as the method that will be used to hoist the personnel.

(3) You must repeat the trial lift before lifting personnel whenever:

(a) The crane or derrick is moved and set up in a different location or returned to a previously used location;

(b) The crane or derrick is reconfigured;

(c) The operator is changed;

(d) The lift route has changed, unless the competent person determines that the new route presents no new factors affecting safety.

(4) A competent person must determine that:

(a) Safety devices and operational aids required by this section are activated and functioning properly. Other safety devices and operational aids must meet the requirements of WAC 296-155-53410 and 296-155-53412.

(b) Nothing interferes with the crane/derrick or the personnel platform in the course of the trial lift.

(c) The lift will not exceed 50% of the crane/derrick's rated capacity at any time during the lift.

(d) The load radius to be used during the lift has been accurately determined.

(5) Immediately after the trial lift, a competent person must:

(a) Conduct a visual inspection of the crane/derrick, base support or ground, and personnel platform, to determine whether the trial lift has exposed any defect or problem or produced any adverse effect.

(b) Confirm that, upon the completion of the trial lift process, the test weight has been removed.

(6) Immediately prior to each lift:

(a) You must hoist the platform a few inches with the personnel and materials/tools on board and inspected by a competent person to ensure that it is secure and properly balanced.

(b) The following conditions must be determined by a competent person to exist before the lift of personnel proceeds:

(i) Hoist ropes must be free of deficiencies in accordance with WAC 296-155-53404.

(ii) Multiple part lines must not be twisted around each other.

(iii) The primary attachment must be centered over the platform.

(iv) If the load rope is slack, you must inspect the hoisting system to ensure that all ropes are properly seated on drums and in sheaves.

(7) You must correct any condition found during the trial lift and subsequent inspection(s) that fails to meet a requirement of this standard or otherwise creates a safety hazard before hoisting personnel.

[Statutory Authority: RCW 49.17.010, .040, .050, and .060. 16-09-085 (Order 15-08), § 296-155-55115, filed 04/19/16, effective, 05/20/16. Statutory Authority: RCW 49.17.010, .004, .050, and .060. 13-02-068 (Order 12-14), § 296-155-55115, filed 12/31/12, effective 02/01/13. Statutory Authority: RCWs 47.17.010, 49.17.040, 49.17.050, 49.17.440 and 49.17.060. 12-01-086 (Order 08-32), § 296-155-55115, filed 12/20/11, effective 02/01/12.]

WAC 296-155-552 Employer responsibilities.

[Statutory Authority: RCWs 47.17.010, 49.17.040, 49.17.050, 49.17.440 and 49.17.060. 12-01-086 (Order 08-32), § 296-155-552, filed 12/20/11, effective 02/01/12.]

WAC 296-155-55200 Employer responsibilities for lifting personnel.

(1) You must require that the provisions of this part are understood and applied at the operational levels and that the appropriate portions of this part are included in the prelift briefing information.

(2) You must:

(a) Assign an employee to function as the lift supervisor, see WAC 296-155-55205;

(b) Prepare a personnel lift plan containing at least the information shown in WAC 296-155-56410. You must retain this plan as part of the job site records;

(c) Verify the need for a personnel lift;

(d) Verify the crane/derrick to be used for the personnel lift;

(e) Authorize the personnel lift operation;

(f) Require the personnel lift be accomplished in accordance with the provisions of this part;

(g) Hold the prelift meeting prior to the trial lift at each new work location;

(h) Verify qualified persons are assigned to perform the functions of the personnel lift supervisor, operator, signal persons, riggers and tagline handlers, as applicable;

(i) Accomplish other tasks that may be needed to enhance the safety of the personnel lift;

(j) Require that all personnel associated with the lift receive the briefings and safety indoctrinations specified in this part. This prelift meeting must be attended by the crane/derrick operator, signal person (if used for the lift), employees to be hoisted, personnel lift supervisor and the person responsible for the task to be performed.

(3) The prelift meeting must cover, as a minimum:

(a) The requirements of the applicable portions of Part L in this chapter;

(b) Assignment and responsibilities of each person involved in the lift operation;

(c) The procedures to be followed;

(d) Guidance on general and specific safety precautions;

(e) Special signals for the operation;

(f) Unique considerations of the lift;

(g) Work to be accomplished during lift;

(h) If applicable, the responsibilities and assignments when lifting personnel near electrical power lines.

(4) If individuals are changed during a series of personnel lifts, you must appropriately brief each new person.

(5) You must not allow or require any operator to lift personnel under the following conditions:

(a) The operator does not feel physically or mentally fit to perform the operation;

(b) The operator has been working for more than 10 hours prior to the start of the lift, or the lift will not be completed before the operator has been working for 12 hours;

(c) The operator did not have at least 8 hours off, immediately prior to the work shift containing the personnel lift operation.

(6) You must verify there are no less hazardous alternatives to performing the work or providing access to the area. You must not authorize the personnel lift when less hazardous means are feasible.

(7) The employer can only authorize personnel lifting over, under, or in the vicinity of power lines in accordance with the requirements of Figures 9, 10 and 11 and Table 10 in WAC 296-155-55305.

[Statutory Authority: RCW 49.17.010, .040, .050, and .060. 16-09-085 (Order 15-08), § 296-155-55200, filed 04/19/16, effective, 05/20/16. Statutory Authority: RCWs 47.17.010, 49.17.040, 49.17.050, 49.17.440 and 49.17.060. 12-01-086 (Order 08-32), § 296-155-55200, filed 12/20/11, effective 02/01/12.]

WAC 296-155-55205 Responsibilities of the personnel lift supervisor.

(1) The personnel lift supervisor must:

(a) Supervise the personnel lift operation;

(b) Verify all crane/derrick and platform inspections have been accomplished as outlined in this part;

(c) Inspect the area for potential hazards, any hazards found during this inspection must be reported to the employer prior to performing the personnel lift. This inspection must include, but not limited to:

(i) Excessive load and/or radius;

(ii) Overhead obstructions and electrical transmission lines;

(iii) Hazardous locations;

(iv) Inadequate surface and support to withstand all forces imposed;

(v) Wind, weather, and unstable conditions;

(vi) Any potentially hazardous conditions.

(d) Verify the base of the crane is level in accordance with manufacturer's recommendations and in no case greater than one percent of level;

(e) For crane/derrick with a boom-attached platform, verify that the platform is attached as specified by the platform manufacturer and crane/derrick manufacturer or qualified person;

(f) Not allow the total weight of the lifted load, including rigging, platform, personnel, tools, and material, to exceed 50% of the crane/derrick's rated load, under the planned conditions of operation (except during testing as outlined in WAC 296-155-55115).

(g) Not allow the platform's rating or the crane's/derrick's reduced rated load to be exceeded when loads are transferred to the hoisted platform.

(h) Verify a trial lift has been performed as outlined in WAC 296-155-55115.

(i) Verify that during the trial lift, the platform is loaded to at least the weight expected during the actual lift.

(j) Not allow the crane/derrick to travel with personnel in the personnel platform except when the crane/derrick runs on fixed rails or runways.

(k) Verify the platform is securely attached to the crane or derrick.

(l) Verify the load line is not attached to or wrapped around the platform.

(m) Verify boom-attached personnel platforms are attached according to manufacturer's specifications or a qualified person.

(n) Keep people from passing under the raised platform.

(o) Ensure there are no more people on the platform than are needed to do the job.

(2) The personnel lift supervisor must ensure the crane/derrick and platform manufacturer's information is consulted for specific instruction on the crane/derrick operation. The crane/derrick and platform operation instructions in this part are intended as minimum criteria.

(3) The personnel lift supervisor must ensure there are an appropriate number of signal persons, ground crew, and platform occupants to perform the personnel lift safely. In suspended and boom-attached platforms without boom motion controls, one occupant must be designated as the platform signal person. This person must be responsible for communicating with the operator and/or other designated signal persons.

[Statutory Authority: RCW 49.17.010, .040, .050, and .060. 16-09-085 (Order 15-08), § 296-155-55205, filed 04/19/16, effective, 05/20/16. Statutory Authority: RCWs 47.17.010, 49.17.040, 49.17.050, 49.17.440 and 49.17.060. 12-01-086 (Order 08-32), § 296-155-55205, filed 12/20/11, effective 02/01/12.]

WAC 296-155-55210 Crane or derrick operation requirements for personnel lifting.

(1) Before lifting personnel you must meet the following:

(a) Operate crane/derrick with outriggers or stabilizers extended, blocked, and locked in accordance with the manufacturers' specifications;

(b) For crane/derrick that uses wire rope to hoist a personnel platform, verify that the crane/derrick has an anti two-block device or upper travel limit switch, installed and operational;

(c) Position the personnel platform so that it may be tied off to the structure to which the occupants are entering or leaving, if the platform cannot be landed during the entrance or exit of the occupants. If the platform has been tied off, the operator must not move the platform until it is verified that it is freely suspended;

(d) Not knowingly allow the platform load to exceed the platform rating, except during proof testing;

(e) Not travel the crane/derrick with personnel in the personnel platform except when they run on fixed rails or runways;

(f) Perform all movements of the platform or crane/derrick in a slow, controlled, cautious manner to minimize sudden movement of the platform;

(g) Engage the power-controlled lowering mechanism at all times the platform is occupied (no freefall);

(h) In the case of suspended or boom-mounted platforms, without controls, the operator must remain at the crane/derrick controls at all times when the platform is occupied;

(i) Reserved;

(j) Platforms with controls. Where the platform is equipped with controls, you must meet all of the following at all times while the platform is occupied:

(i) The occupant using the controls in the platform must be a qualified person with respect to their use, including the safe limitations of the crane/derrick and hazards associated with its operation. See WAC 296-155-53300, Operator qualifications and certification.

(ii) The crane/derrick operator must be at a set of crane controls that include boom and swing functions of the crane, and must be on-site and in view of the crane/derrick and platform.

(iii) The platform operating manual must be in the platform or on the crane/derrick.

Note: If lowering, retracting, and rotating primary power source becomes inoperative, the crane/derrick operator is allowed to leave the controls.

(k) Set all brakes and locks on the crane/derrick after positioning of the personnel platform and before personnel perform any work;

(l) Move the platform under controlled conditions and under the direction of a qualified signal person or platform occupant(s);

(m) Not move platforms over, under, or in the vicinity of power lines unless the requirements of WAC 296-155-55305 are met;

(n) Not lift any other loads, on any other load lines, while conducting a personnel lift. When the crane/derrick has a boom-attached platform without controls, you must not use it for other lifting service;

(o) Factory-produced boom-mounted personnel platforms that incorporate a winch as original equipment: Loads are permitted to be hoisted by such a winch while employees occupy the personnel platform only where the load on the winch line does not exceed 500 pounds and does not exceed the rated capacity of the winch and platform, and does not exceed 50% of the crane's rated capacity at the radius and configuration used;

(p) Not disable, or allow to be disabled, any crane/derrick safety device during a personnel lift;

(q) Hoist the platform at a speed suitable for the safety of the operation but in no case in excess of 90 feet/minute (30 m/minute) or 1.5 feet/second (0.5 m/second).

(2) The operator must not move the platform without a discernible or audible signal from a signal person.

[Statutory Authority: RCW 49.17.010, .040, .050, and .060. 16-09-085 (Order 15-08), § 296-155-55210, filed 04/19/16, effective, 05/20/16. Statutory Authority: RCW 49.17.010, .004, .050, and .060. 13-02-068 (Order 12-14), § 296-155-55210, filed 12/31/12, effective 02/01/13. Statutory Authority: RCWs 47.17.010, 49.17.040, 49.17.050, 49.17.440 and 49.17.060. 12-01-086 (Order 08-32), § 296-155-55210, filed 12/20/11, effective 02/01/12.]

WAC 296-155-553 Lifting personnel.

You must only lift personnel on platforms with cranes or derricks if it is the only possible way to accomplish the work that needs to be done. See WAC 296-155-547.

[Statutory Authority: RCW 49.17.010, .040, .050, and .060. 16-09-085 (Order 15-08), § 296-155-553, filed 04/19/16, effective, 05/20/16. Statutory Authority: RCWs 47.17.010, 49.17.040, 49.17.050, 49.17.440 and 49.17.060. 12-01-086 (Order 08-32), § 296-155-553, filed 12/20/11, effective 02/01/12.]

WAC 296-155-55300 Personnel lifting requirements.

(1) Conditions must provide clear visibility. When conditions such as darkness, fog, or snow prevent clear visibility, you must not perform a personnel lift.

(2) Personnel platforms cannot be used in winds (sustained or gusts) in excess of 20 mph (32.2 km/hr) or in electric storms, snow, ice, sleet, or other adverse weather conditions which could affect the safety of personnel.

(3) Other weather and environmental conditions. A qualified person must determine if, in light of indications of dangerous weather conditions, or other impending or existing danger, it is not safe to lift personnel. If it is not, you must begin the lifting operation (or, if already in progress, you must terminate operations).

(4) You must only use personnel platforms for personnel, their tools, and sufficient material to do their work. You must use them solely for transporting bulk materials.

(5) The number of employees occupying the personnel platform must not exceed the maximum number the platform was designed to hold or the number required to perform the work, whichever is less.

(6) A qualified person must evaluate the safety concerns of the operational environment and verify the platform and crane/derrick are suitable for use. Additionally, special work circumstances may require further precautions. You must take precautions such as, but not limited to, the following:

(a) When welding is to be accomplished from the personnel platform, you must provide suitable electrode holders to protect them from contact with any conducting components of the platform.

(b) You must instruct operators of cranes/derricks, installed on floating vessels, not to lift personnel when the list or trim of the vessel exceeds 5 degrees. If a mobile crane/derrick is placed on floating vessels, operators must not lift personnel when the list or trim of the vessel exceeds one degree.

(c) You must provide personnel fall protection devices with quick release features and require them to be worn. The fall protection device must be appropriately attached while personnel are lifted over land and detached while personnel are lifted over water. See Part C-1 of this chapter for requirements for fall arrest system, including the attachment point (anchorage) used to comply with this subsection. When personnel lifts are conducted over water, you must provide U.S. Coast Guard approved (Type I, II, III, or V) personnel flotation devices and require them to be worn.

(d) A boat/skiff with appropriate rescue personnel must be readily available at all times during a personnel lift over water.

(e) You must provide appropriate personnel protective equipment and require it to be used around toxic, flammable, or hazardous substances or fumes.

(f) You must review any concentrated loading of the platform to preclude the overstressing of any component or impairing the platform stability.

(g) Where the rotation of the platform, while hoisted, can create a hazard, you must provide appropriate restraining methods and require them to be used.

(7) **In order to safely perform the personnel lift, make sure the following are met**:

(a) The personnel platform is **not** loaded with more than its rated load capacity;

(b) Materials and tools being lifted by a platform are:

(i) Secured to prevent movement;

(ii) Evenly distributed on the platform.

(c) The personnel platform is hoisted slowly, with no sudden movements;

(d) Tag lines are used to control the motion of suspended platforms, unless using them creates a hazard;

(e) The platform is secured to the structure where the work will be performed before employees exit or enter the platform, unless securing to the structure is unsafe;

(f) No other load lines on the crane or derrick are used to lift anything while personnel are on a platform;

(g) Brakes and locking devices are engaged when the personnel platform is occupied and in a stationary working position;

(h) The lowering motion of the hoist line and/or the boom is power-controlled only. Free fall is **not** allowed;

(8) The platform operation instructions in this rule are intended as minimum criteria. You must consult the platform manufacturer's information for specific instruction on the platform's operation.

(9) Traveling.

(a) Rubber tired cranes are not allowed to travel while lifting personnel. Hoisting of employees while the crane is traveling is only allowed when:

(i) The crane travels on fixed rails; or

(ii) The crane has crawlers and is on a runway, and the employer demonstrates that there is no less hazardous way to perform the work.

(b) Where employees are hoisted while the crane is traveling, you must meet the following criteria:

(i) You must restrict crane travel to a fixed track or runway.

(ii) Where a runway is used, it must be a firm, level surface designed, prepared and designated as a path of travel for the weight and configuration of the crane/derrick being used to lift and travel with the personnel platform. An existing surface may be used as long as it meets these criteria.

(iii) You must limit travel to boom length.

(iv) The boom must be parallel to the direction of travel, except where it is safer to do otherwise.

(v) You must perform a complete trial run to test the route of travel before employees are allowed to occupy the platform. This trial run can be performed at the same time as the trial lift required by WAC 296-155-55115 which tests the lift route.

(10) Derricks are prohibited from traveling while personnel are hoisted.

(11) Platform occupants must remain in continuous sight or in communication with the operator and in sight and communication of a signal person.

(12) Platform occupants must use personnel protective equipment, such as hard hats, safety glasses, hearing protection, and gloves, in conditions where a hazard of injury exists.

(13) Platform occupants must wear personnel fall protection devices with lanyards attached to a specific anchorage point(s), unless special work circumstance requirements dictate otherwise, such as working over water.

(14) Platform occupants must keep all parts of the body inside the platform during raising, lowering, and horizontal movement. This provision does not apply to an occupant of the platform when necessary to position the platform or while performing the duties of a signal person.

(15) Platform occupants must not stand, sit on, or work from the top rail, intermediate rail, toe board, or use any other device to enhance their vertical height working capability.

(16) Platform occupants must not pull the platform out of plumb in relation to the crane/derrick.

(17) Platform occupants must not enter or exit a suspended platform while it is raised unless the platform has an installed gate and is physically secured to the structure to which the occupants are entering or exiting unless the employer can demonstrate that securing to the structure would create a greater hazard.

(18) Platform occupants must not operate a platform with motion controls without the platform operation manual available in the platform.

(19) If the platform is tied to the structure, the operator must not move the platform until the operator receives confirmation that it is freely suspended.

(20) You must inspect the platform prior to each lift to verify all attachments and the platform are safe to use.

(21) Verify the platform is evenly loaded, material secured, and the total platform weight does not exceed the platform rating or the reduced crane/derrick lift capacity.

(22) **Communication requirements**.

(a) Hand signals to the operator must be in accordance with the applicable crane/derrick portion of this part.

(b) Signals must be discernable or audible to the operator.

(c) You must post hand signals conspicuously at the following locations:

(i) On the crane/derrick as required by this part.

(ii) Inside the personnel platform.

(iii) At any platform motion control locations.

(d) Some operations may require additions to or modifications of standard signals.

(i) Any special signals must be agreed upon and understood by the signal persons and crane/derrick operator.

(ii) Special signs must not conflict with the crane/derrick standard signals.

(e) No response must be made unless signals are clearly understood.

(f) If communications between operator and platform occupants are disrupted, you must stop all operations until communication is reestablished.

(g) You must verify communication systems to be used during the lift as functioning and effective prior to commencing the lift.

Note: If radios or other electronic means of communication are used, they should operate on a secure channel.

[Statutory Authority: RCW 49.17.010, .040, .050, and .060. 16-09-085 (Order 15-08), § 296-155-55300, filed 04/19/16, effective, 05/20/16. Statutory Authority: RCW 49.17.010, .004, .050, and .060. 13-02-068 (Order 12-14), § 296-155-55300, filed 12/31/12, effective 02/01/13. Statutory Authority: RCW 47.17.010, 49.17.040, 49.17.050, 49.17.440 and 49.17.060. 12-01-086 (Order 08-32), § 296-155-55300, filed 12/20/11, effective 02/01/12.]

WAC 296-155-55305 Lifting personnel near electrical power lines.

(1) It is recognized that lifting personnel where the crane/derrick or platform can become electrified from electric power lines is an extremely hazardous practice. It is required to perform the lift so there is no possibility of the crane/derrick, load line, or personnel platform becoming a conductive path. You must not use cranes/derricks to lift personnel under electric power lines if any combination of boom, personnel platform, load line, and machine component will enter the prohibited zone. (See Table 10.) Lifting personnel near electric lines is not allowed unless there is no less hazardous way to do the job. The 3 situations to consider, and take steps to establish, when lifting personnel near electric power lines are:

Table 10	
Condition	**Situation**
A	Power lines are de-energized and grounded as shown in Figure 9. (This is the safest and preferred condition)
B	Power lines are energized with the crane/derrick outside the prohibited zone, but there is a potential for the crane/derrick or platform being energized as shown in Figure 10.
C	Power lines are energized with the crane/derrick inside the prohibited zone, and there is a possibility that the crane/derrick or platform can become energized as shown in Figure 11. (Lifting personnel in this condition is prohibited)

(2) **Condition A**. This is the preferred condition under which a personnel lift can be performed. The hazard of injury or death due to electrocution has been removed. You must take the following steps when lifting personnel in a Condition A situation:

(a) The power company or owner of the power lines must deenergize the lines.

(b) The power lines must be visibly grounded to avoid the possibility of electrical feedback.

(c) A qualified representative of the owner of the power lines or a designated representative of the electric utility must be on the site to verify that steps (a) and (b) of this subsection have been completed and that the power lines are not energized.

(d) You must install durable signs at the operator's station and on the outside of the crane warning that electrocution or serious bodily injury may occur unless the minimum clearance of 20 feet is maintained between the crane/derrick and platform and power lines up to 350 kV or 50feet of a power line that is over 350 kV. You must post these signs at the crane/derrick operating station, on the outside of the crane/derrick, and inside the personnel platform.

(e) If proximity warning devices, insulated links, or boom cages are used, they must not be a substitute for any of the requirements of this section. If these devices are used, you must instruct the crane/derrick operator, ground crew, and platform occupants on the limitations of the devices, operating condition requirements of the devices, and the devices' testing requirements prescribed by the device manufacturer.

(3) **Condition B.** You must take the following steps when lifting personnel in a Condition B situation:

(a) A meeting, on the job site, between the job site management and either a qualified representative of the owner of the power lines or the electric utility must take place. You must establish procedures to safely complete the lift.

(b) Hoisting personnel within 20 feet of a power line that is up to 350 kV, and hoisting personnel within 50 feet of a power line that is over 350 kV, is prohibited, except for work covered by chapter 296-45 WAC, safety standards for electrical workers and performed by qualified personnel.

(c) You must add power line movement, horizontal and vertical, due to wind to the distances specified in (b) of this subsection. You must consult a qualified representative of the power line owner or a designated representative of the electric utility for the movement distances.

(d) You must continuously monitor the required clearances to the power lines by a dedicated and qualified signal person in constant communication with the crane/derrick operator.

(e) Personnel platform movement restraint, when required, must be done through electrically nonconductive tag lines.

(f) You must not permit any person outside the personnel platform to touch the crane/derrick, load line, or platform unless the signal person identified in (d) of this subsection indicates it is safe.

(g) You must post durable signs warning that electrocution or serious bodily injury may occur unless the minimum clearance specified in (b) of this subsection is maintained between the crane/derrick and platform and power lines. You must post these signs at the crane/derrick operating station, on the outside of the crane/derrick, and inside the personnel platform.

(h) If proximity warning devices, insulated links, or boom cages are used, they must not be a substitute for any of the requirements of this section. If these devices are used, you must instruct the crane/derrick operator, ground crew, and platform occupants on the limitations of the devices, operating condition requirements of the devices, and the devices' testing requirements prescribed by the device manufacturer.

(4) **Condition C**. Lifting personnel under Condition C is prohibited.

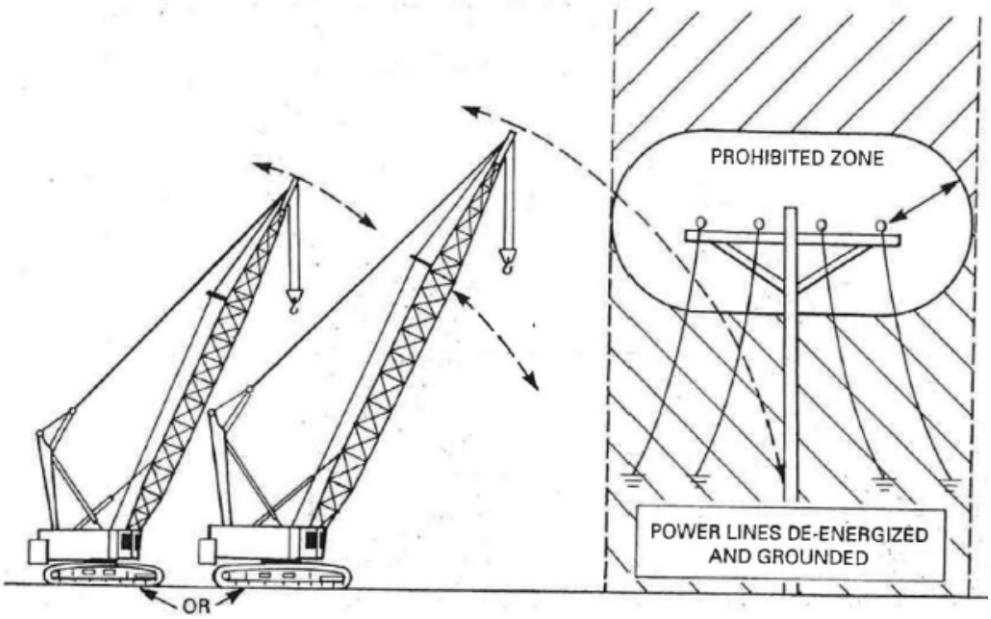

Figure 9-Condition A (see Table 10).

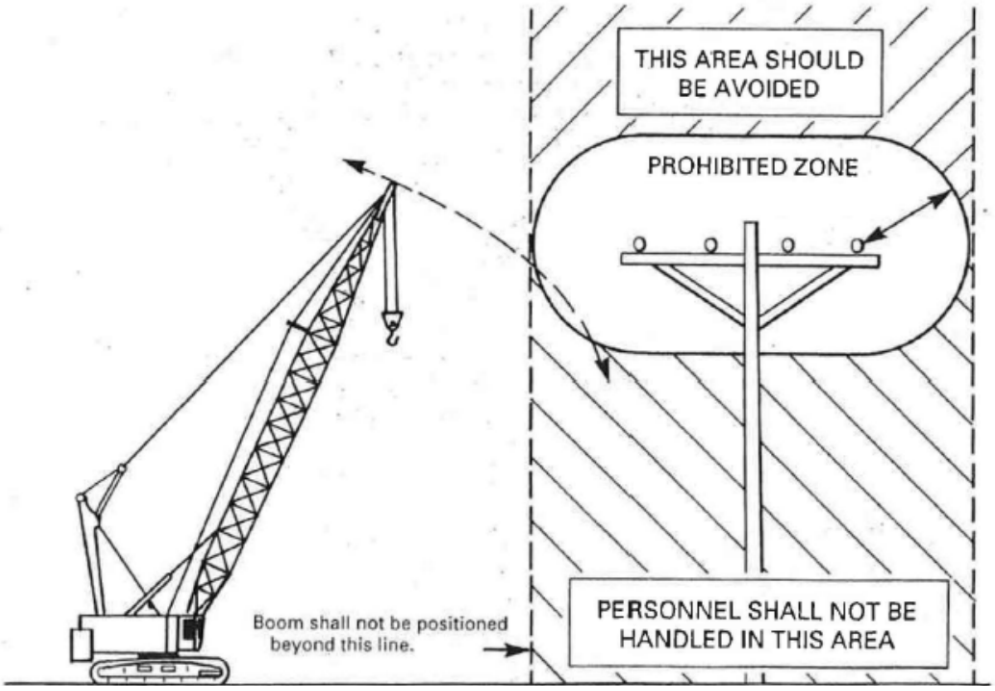

Figure 10-Condition B (see Table 10).

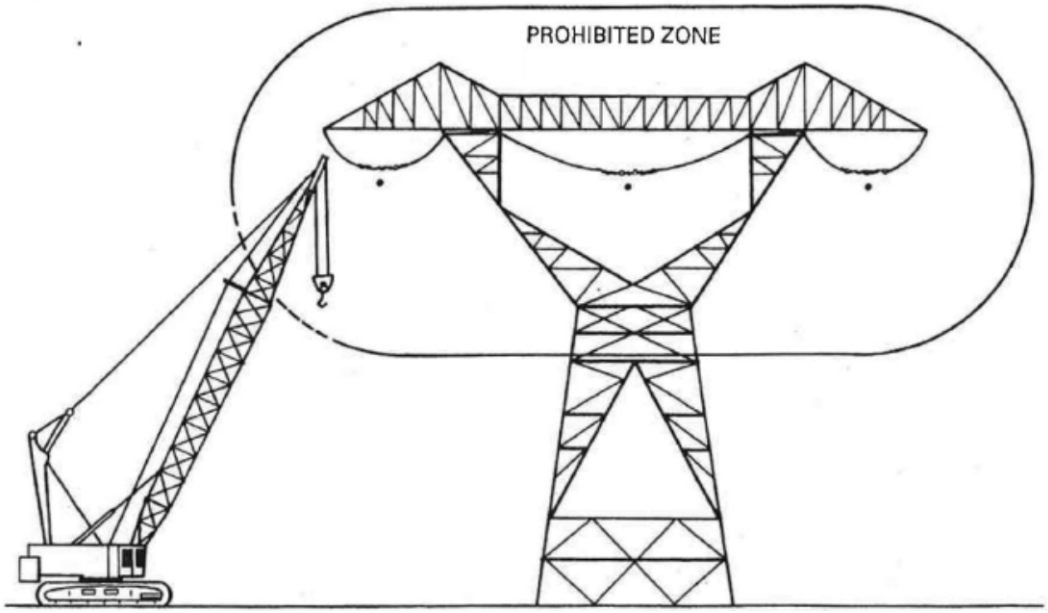

Figure 11-Condition C (see Table 10) This Condition is Prohibited.

[Statutory Authority: RCW 49.17.010, .040, .050, and .060. 16-09-085 (Order 15-08), § 296-155-55305, filed 04/19/16, effective, 05/20/16. Statutory Authority: RCW 49.17.010, 49.17.040, 49.17.050, 49.17.440 and 49.17.060. 12-01-086 (Order 08-32), § 296-155-55305, filed 12/20/11, effective 02/01/12.]

WAC 296-155-554 Boatswain's chairs.

[Statutory Authority: RCW 49.17.010, 49.17.040, 49.17.050, 49.17.440 and 49.17.060. 12-01-086 (Order 08-32), § 296-155-554, filed 12/20/11, effective 02/01/12.]

WAC 296-155-55400 Use boatswain's chairs as a last resort.

(1) You must use only boatswain's chairs when it is not possible to accomplish the task in a less hazardous way.

(2) Follow all applicable requirements in this part for the use of boatswain chairs.

(3) The chair must be capable of supporting its own weight and at least 5 times the maximum intended load.

(4) Boatswain's chair tackle must consist of correct size ball bearings or bushed blocks containing safety hooks and properly "eye-spliced" minimum 5/8 inch (1.6 cm) diameter first-grade manila rope, or other rope which will satisfy the criteria (e.g., strength and durability) of manila rope.

(5) Boatswain's chair seat slings must be a minimum of 5/8 inch (1.6 cm) diameter fiber, synthetic, or other rope which will satisfy the criteria (e.g., strength, slip resistance, durability, etc.) of first-grade manila rope.

(6) Boatswain's chair seat slings must be reeved through 4 corner holes in the seat; must cross each other on the underside of the seat; and must be rigged so as to prevent slippage which could cause an out-of-level condition.

(7) Hooks on headache ball assemblies, lower load blocks, or other attachment assemblies must be of a type that can be closed and locked, eliminating the hook throat opening. Alternatively, an alloy anchor type shackle with a bolt, nut and retaining pin may be used.

[Statutory Authority: RCW 49.17.010, .040, .050, and .060. 16-09-085 (Order 15-08), § 296-155-55400, filed 04/19/16, effective, 05/20/16. Statutory Authority: RCW 49.17.010, 49.17.040, 49.17.050, 49.17.440 and 49.17.060. 12-01-086 (Order 08-32), § 296-155-55400, filed 12/20/11, effective 02/01/12.]

WAC 296-155-55405 Lifting personnel using a boatswain's chair.

(1) You must not load the boatswain's chair in excess of its rated load capacity.

(2) You must only use the boatswain's chair for employees, their tools, and the materials necessary to do their work. Do not use the chair to hoist materials or tools without hoisting employees.

(3) You must secure materials and tools during lift.

(4) You must assign a signal person any time the lift will take the employee out of the direct sight of the crane operator.

(5) The employee being lifted must use personal fall protection equipment, including a full body harness with the lanyard attached independent of the chair. You must secure the lanyard to the lift line above the headache ball or to the crane hook itself.

(6) Only one employee can be lifted at a time.

(7) The operator must:

(a) Lift the chair in a slow, controlled manner with no sudden movements;

(b) Remain at the crane/derrick controls at all times when the chair is occupied.

(8) You must engage all brakes and locking features when the occupied chair is in a stationary working position.

(9) You must stop operations if any safety device quits working properly during the use of the boatswain's chair.

(10) You must repair the safety device before resuming operations. Alternative measures are not permitted.

(11) Any other lifting on the crane/derrick's load lines is prohibited while personnel are suspended in a chair.

[Statutory Authority: RCW 49.17.010, .040, .050, and .060. 16-09-085 (Order 15-08), § 296-155-55405, filed 04/19/16, effective, 05/20/16. Statutory Authority: RCW 49.17.010, 49.17.040, 49.17.050, 49.17.440 and 49.17.060. 12-01-086 (Order 08-32), § 296-155-55405, filed 12/20/11, effective 02/01/12.]

WAC 296-155-556 Rigging--General requirements.

[Statutory Authority: RCW 49.17.010, .004, .050, and .060. 13-02-068 (Order 12-14), § 296-155-556, filed 12/31/12, effective 02/01/13. Statutory Authority: RCW 49.17.010, 49.17.040, 49.17.050, 49.17.440 and 49.17.060. 12-01-086 (Order 08-32), § 296-155-556, filed 12/20/11, effective 02/01/12.]

WAC 296-155-55600 General requirements.

(1) You must use at least one qualified rigger as follows:

(a) During hoisting activities for assembly and disassembly work (WAC 296-155-53402 (19)(a));

(b) Whenever employees are engaged in hooking, unhooking, or guiding a load, or in the initial connection of a load to a component or structure, and are within the fall zone (WAC 296-155-53400 (43)(c)).

Note: See qualified rigger requirements located in WAC 296-155-53306 of this part.

(2) All slings in use must meet the applicable requirements for design, inspection, construction, testing, maintenance and operation as prescribed in ASME B30.9-2010.

(3) All rigging hardware in use must meet the applicable requirements for design, inspection, construction, testing, maintenance and operation as prescribed in ASME B30.26-2010.

(4) You must use all rigging gear in accordance with the manufacturer's recommendations or a qualified person.

(5) All below-the-hook lifting devices in use must meet the applicable requirements for design, inspection, construction, testing, maintenance and operation as prescribed in ASME B30.20-2010.

(6) All hooks in use must meet the applicable requirements for design, inspection, construction, testing, maintenance and operation as prescribed in ASME B30.10-2009.

(7) Repair of hooks must be approved by the manufacturer or qualified person and as follows:

(a) Cracks, nicks, and gouges may be repaired by a competent person, all other repairs are done by the manufacturer or a qualified person;

(b) Grind longitudinally, following the contour of the hook;

(c) Do not reduce the dimension of the hook more than 10% from the original.

(8) You must not modify hooks by welding and/or drilling unless written approval by the manufacturer has been received.

(9) You must mark special custom design grabs, hooks, clamps, or other lifting accessories, for such units as modular panels, prefabricated structures and similar materials, to indicate the safe working loads and they must be proof tested prior to use to 125% of their rated load.

(10) A qualified person must inspect the rigging equipment before each day or shift and:

(a) Consider the application the equipment will be used for, and determine if it is safe for use;

(b) Remove the equipment from service if using it will create a hazard or meets any of the removal criteria listed in this chapter.

(11) The rated load of the rigging equipment must not be exceeded.

(12) All rigging hardware must have permanently affixed and legible identification markings as prescribed by the manufacturer that indicate the recommended safe working load.

(13) You must inspect all rigging hardware in accordance with Table 11, each day before using. If a daily inspection is not feasible because the hardware is in a semipermanent or inaccessible location, a periodic inspection is allowed instead of daily.

(14) You must remove rigging hardware from service when it shows any conditions listed in Table 11, or any other hazardous condition.

Table 11 Rigging Hardware Inspection/Removal Criteria
For all hardware, inspect for the following:
Missing or illegible identification.
Indications of heat damage, including weld spatter or arc strikes.
Excessive pitting or corrosion.
Load bearing components that are: • Bent; • Twisted; • Distorted; • Stretched; • Elongated; • Cracked; • Broken.
Excessive nicks or gouges.
10% reduction of the original or catalog dimension at any point.
Excessive thread damage or wear, where applicable.
Evidence of unauthorized welding or modification.
Any other conditions that cause doubt as to the safety of continued use.
On **Shackles,** also inspect for incomplete pin engagemen.t
On **swivels and swivel hoist rings**, check for lack of ability to freely rotate or pivot.
On **Compression hardware**, also check for: Unauthorized replacement components; Insufficient number of wire rope clips; Improperly tightened wire rope clips; Damaged wire rope; Indications of wire rope slippage Improper assembly.
On **Swivels,** check for loose or missing nuts, bolts, cotter pins, snap rings, or other fasteners and retaining devices.
On **Blocks** check for: • Loose or missing nuts, bolts, cotter pins, snap rings, or other fasteners and retaining devices; • Misalignment or wobble in sheaves; • Excessive sheave groove corrugation or wear.

(15) Any alteration or modification of rigging hardware must be in accordance with the hardware manufacturer or a qualified person and proof load tested to 125%. You must document this test and make it available upon request.

(16) Welding of rigging hardware is prohibited unless authorized by the manufacturer or an RPE.

(17) Replacement parts must meet or exceed the original rigging hardware manufacturer's specifications.

(18) Rigging hardware selection must have the characteristics suitable for the application and environment where it will be used.

(19) Workers must keep all parts of their body from between the load and any rigging during the lift.

(20) If handling intermodal shipping containers at a construction site, you must follow the requirements in chapter 296-56 WAC, longshore, stevedore and waterfront related operations, Part F, Specialized terminals and the guidelines found in International Organization for Standardization (ISO) 3874 - Series 1 Freight Containers, fifth edition - Handling and Securing.

[Statutory Authority: RCW 49.17.010, .040, .050, and .060. 16-09-085 (Order 15-08), § 296-155-55600, filed 04/19/16, effective, 05/20/16. Statutory Authority: RCW 49.17.010, .004, .050, and .060. 13-02-068 (Order 12-14), § 296-155-55600, filed 12/31/12, effective 02/01/13. Statutory Authority: RCWs 47.17.010, 49.17.040, 49.17.050, 49.17.440 and 49.17.060. 12-01-086 (Order 08-32), § 296-155-55600, filed 12/20/11, effective 02/01/12.]

WAC 296-155-558 Slings.

[Statutory Authority: RCW 49.17.010, 49.17.040, 49.17.050, 49.17.440 and 49.17.060. 12-01-086 (Order 08-32), § 296-155-558, filed 12/20/11, effective 02/01/12.]

WAC 296-155-55800 Chain Slings.

(1) Only use chain slings that are made from grade 80 or higher alloy steel chain.

(2) You must meet the following requirements if manufacturing your own chain slings:

(a) Have a design factor of 4;

(b) Meet the rated load requirements in subsection (9) of this section.

(3) Rate chain slings with the load capacity of the lowest rated component of the sling. For example, if you use fittings that are rated lower than the sling material itself, identify the sling with the lower rated capacity.

(4) Makeshift fittings, such as hooks or links formed from bolts, rods, or other parts are prohibited.

(5) All chain slings must have legible identification information attached to the sling which includes the following information:

(a) Name or trademark of the manufacturer;

(b) Grade;

(c) Nominal chain size;

(d) Number of legs;

(e) Rated loads for the vertical hitch and bridle hitch and the angle upon which it is based;

(f) Length (reach);

(g) Individual sling identification (e.g., serial numbers);

(h) Repairing agency, if the sling was ever repaired.

(6) **Inspections**.

(a) A qualified person must inspect chain slings before their initial use, according to Table 12, both:

(i) When the sling is new; and

(ii) Whenever a repair, alteration, or modification has been done.

(b) A qualified person must perform a visual inspection for damage, each day or shift the chain sling is used. Immediately remove from service any sling damaged beyond the criteria in Table 12.

(c) A qualified person must perform periodic inspections on chain slings according to Table 12.

(i) You must examine each link and component individually, taking care to expose and examine all surfaces including the inner link surfaces.

(ii) Remove slings from use:

- If any of the conditions in Table 12 are found;
- When they have been exposed to temperatures above 1,000 degrees Fahrenheit.

(b) You must keep a written record of the most recent periodic inspection, including the condition of the sling.

Note: An external code mark on the sling is an acceptable means of recording the inspection as long as the code can be traced back to a record.

Table 12 Chain Sling Inspection/Removal Criteria	
Inspect alloy steel chain slings for the following conditions:	**Perform inspections:**
• Missing or illegible sling identification. • Cracks or breaks. • Excessive nicks, gouges, or wear beyond that allowed in Table 13, Minimum Allowable Thickness at Any Point on a Link. • Stretched chain links or components. • Bent, twisted or deformed chain links or components. • Evidence of heat damage. • Excessive pitting or corrosion. • Inability of chain or components to hinge (articulate) freely. • Weld spatter. • Hooks that have any of the following conditions: – Any visibly apparent bend or twist from the plane of the unbent hook; – Any distortion causing an increase in throat opening of 5%, not to exceed 1/4 inch, or as otherwise recommended by the manufacturer; – Wear exceeding 10% of the original section dimension of the hook or its load pin, or as otherwise recommended by the manufacturer; – A self-locking mechanism that does not lock (if applicable); – Any latch that does not close the hook's throat (if applicable). • Other visible damage that raises doubt about the safety of the sling.	• At least once a year for slings in normal service, which means use within the rated load. • At least once a quarter for slings in severe service, which involves abnormal operating conditions. • As recommended by a qualified person for slings in special service, which is anything other than normal or severe.

Table 13 Minimum Allowable Thickness at Any Point on a Link			
Nominal Chain or Coupling Link Size		**Minimum Allowable Thickness at Any Point on the Link**	
Inches	Millimeters	Inches	Millimeters
7/32	5.5	0.189	4.80
9/32	7	0.239	6.07
5/16	8	0.273	6.93
3/8	10	0.342	8.69
½	13	0.443	11.26
5/8	16	0.546	13.87
3/4	20	0.687	17.45
7/8	22	0.750	19.05
1	26	0.887	22.53
1 1/4	32	1.091	27.71

(7) Repair, alterations, or modifications.

(a) You must repair slings as follows:

(i) You must only repair slings by the manufacturer or a qualified person;

(ii) Chain used for sling repair must be alloy steel chain manufactured and tested in accordance with ASTM A 391/A 391M for Grade 80 chain and ASTM A 973/A 973M for Grade 100 chain;

(iii) Components for alloy steel chain slings must be manufactured and tested in accordance with ASTM A 952/A 952M;

(iv) The use of mechanical coupling links within the body of a chain sling to connect two pieces of chain is prohibited;

(v) Replace cracked, broken, or bent chain links or components instead of repairing them.

(b) The sling must be marked to show the repairing agency.

(c) You must proof test repaired slings according to the requirements in subsection (8) of this section. If only replacing components of the sling, and the components were individually proof tested, the sling does not have to be tested as a whole.

Note: For additional requirements relating to repair and modification see WAC 296-155-55600(9).

(8) Proof test chain slings. Prior to initial use, all new and repaired chain and components of an alloy steel chain sling, either individually or as an assembly must be proof tested by the sling manufacturer or a qualified person. Follow the requirements in Table 14, Chain Sling Proof Load Requirements.

Table 14 Chain Sling Proof Load Requirements	
When proof testing this type of equipment:	**Then proof load:**
• Single or multiple leg slings. • Components attached to single legs.	Each leg and component to at least two times the single leg vertical hitch rated load.
• Master links for double leg bridle slings. • Single basket slings. • Master coupling links connected to two legs.	To at least 4 times the single leg vertical hitch rated load.
• Master links for triple and quadruple leg bridle slings.	To at least 6 times the single leg vertical hitch rated load.

(9) Chain slings rated loads, the term "working load limit" is commonly used to describe rated load.

Note: Rated loads are based on the following factors:

- *Strength of sling materials;*
- *Design factor;*
- *Type of hitch;*
- *Angle of loading.*

(a) You must use chain slings within the rated loads shown in Tables 1 through 4 of ASME B30.9-2010. For angles that are not shown in these tables, either use the rated load for the next lower angle or one calculated by a qualified person.

(b) The use of horizontal sling angles less than 30 degrees are prohibited, unless recommended by the sling manufacturer or a qualified person. See Figure 12, Multiple-Leg Bridle Sling Hitch.

(c) You must verify rated loads for slings used in a choker meet the values shown in the above referenced tables provided that the angle of choke is 120 or greater. See Figure 13, Single-Leg Choker Hitch.

(d) Rated loads for angles of choke less than 120 degrees must be determined by the manufacturer or a qualified person.

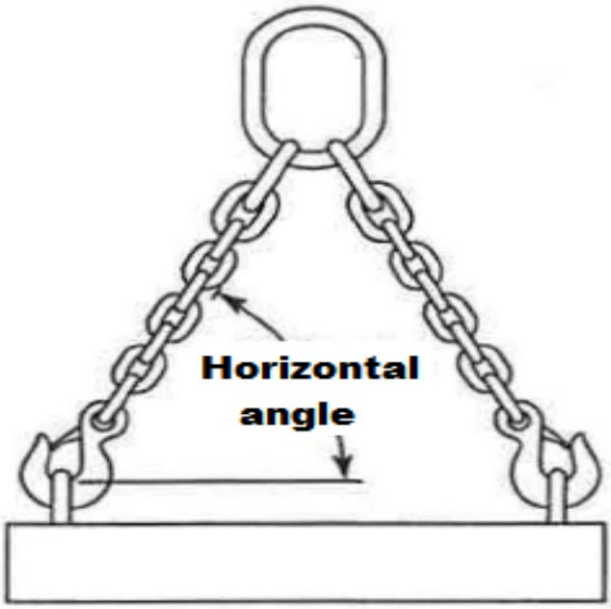

Figure 12-Multiple-Leg Bridle Sling Hitch.

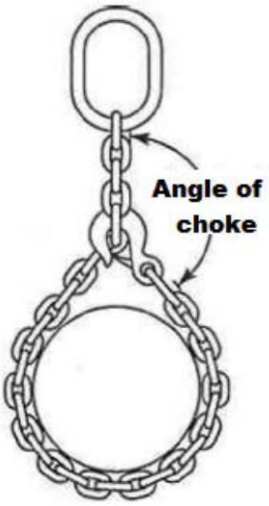

Figure 13-Single-Leg Choker Hitch.

(10) Use of chain slings.

(a) Shorten or adjust slings using only methods approved by the manufacturer or a qualified person.

(b) You must not shorten or lengthen slings by knotting or twisting.

(c) Twisting and kinking must be avoided.

(d) Hitch slings in a way that provides control of the load.

(e) Balance the load in slings used in a basket hitch to prevent it from slipping.

(f) You must protect slings from sharp edges of the load. See Figure 14.

(g) You must prevent the sling from snagging anything during the lift, with or without load.

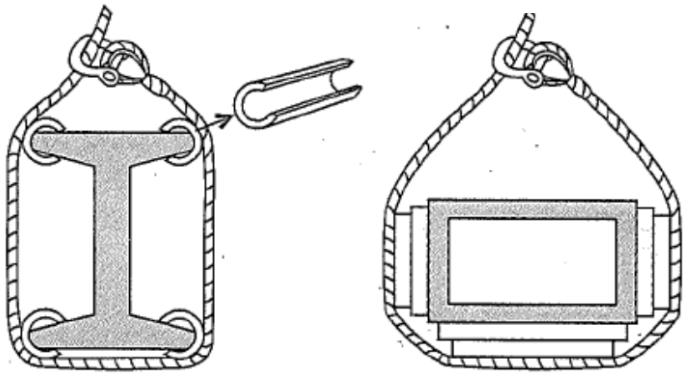

Softeners can be made from split pipe, padding or blocking

Figure 14 Softeners.

[Statutory Authority: RCW 49.17.010, .040, .050, and .060. 16-09-085 (Order 15-08), § 296-155-55800, filed 04/19/16, effective, 05/20/16. Statutory Authority: RCWs 47.17.010, 49.17.040, 49.17.050, 49.17.440 and 49.17.060. 12-01-086 (Order 08-32), § 296-155-55800, filed 12/20/11, effective 02/01/12.]

WAC 296-155-55805 Wire rope slings.

(1) Manufacturing wire rope slings.

(a) Wire rope slings must be made from new or unused regular lay wire rope. The wire rope must be manufactured and tested in accordance with ASTM A 1023-02 and ASTM A 586.

(b) The following fabrication methods must be used to make wire rope slings:

(i) Hand splicing;

(ii) Turnback eye;

(iii) Return loop;

(iv) Flemish eye mechanical splicing;

(v) Poured or swaged socketing.

(c) Wire rope slings must have a design factor of 5.

(d) Wire rope slings must meet the requirements in Table 16.

(e) Using any of the following when making wire rope slings is prohibited:

(i) Rotation resistant wire rope;

(ii) Malleable cast iron clips;

(iii) Knots;

(iv) Wire rope clips, unless:

- The application of the sling prevents using prefabricated slings;
- The specific application is designed by a qualified person.

(f) You must install and maintain wire rope clips, if used, in accordance with the recommendations of the clip manufacturer or a qualified person, or in accordance with the provisions of ASME B30.26-2010.

(g) You must not use slings made with wire rope clips as a choker hitch.

> *Note: If using wire rope clips under these conditions, follow the guidance given in Table 15.*

Table 15

Number, Torque Values, and Turn Back Requirements for U-Bolt Wire Rope Clips				***Number, Torque, and Turn Back Requirements for U-Bolt Wire Rope Clips Saddle (Fist Grip) Wire Rope Clips***			
Clip & Wire Rope Size (inches)	**Min. No. of Clips**	**Amount of Rope Turn Back in Inches**	*** Torque in Ft. Lbs.**	**Clip & Wire Rope Size (inches)**	**Min. No. of Clips**	**Amount of Rope Turn Back in Inches**	*** Torque in Ft. Lbs.**
1/8	2	3-1/4	4.5	3/16-1/4	2	4	30
3/16	2	3-3/4	7.5	5/16	2	5	30
1/4	2	4-3/4	15	3/8	2	5-1/4	45
5/16	2	5-1/4	30	7/16	2	6-1/2	65
3/8	2	6-1/2	45	1/2	3	11	65
7/16	2	7	65	9/16	3	12-3/4	130
1/2	3	11-1/2	65	5/8	3	13-1/2	130
9/16	3	12	95	3/4	4	16	225
5/8	3	12	95	7/8	4	26	225
3/4	4	18	130	1	5	37	225
7/8	4	19	225	1-1/8	5	41	360
1	5	26	225	1-1/4	6	55	360
1-1/8	6	34	225	1-3/8	6	62	500
1-1/4	7	44	360	1-1/2	7	78	500
1-3/8	7	44	360				
1-1/2	8	54	360				
1-5/8	8	58	430				
1-3/4	8	61	590				
2	8	71	750				
2-1/4	8	73	750				
2-1/2	9	84	750				
2-3/4	10	100	750				
3	10	106	1200				
3-1/2	12	149	1200				

*** The tightening torque values shown are based upon the threads being clean, dry, and free of lubrication.**

Table 16 Wire Rope Sling Configuration Requirements	
If you have:	**Then you need:**
• Slings made of rope with 6 x 19 and 6 x 36 classification. • Cable laid slings.	A minimum clear length of rope 10 times the rope diameter between splices, sleeves, or end fittings (See Figure 15, Minimum Sling Length) unless approved by a qualified person.
• Braided slings.	A minimum clear length of rope 40 times the component rope diameter between the loops or end fittings (See Figure 16, Minimum Braided Sling Length) unless approved by a qualified person.
• Grommets and endless slings.	A minimum circumferential length of 96 times the body diameter of the grommet or endless sling unless approved by a qualified person.
• Other configurations.	Specific limitation data provided by a qualified person. These slings must meet all other requirements of ASME B30.9, 2010.

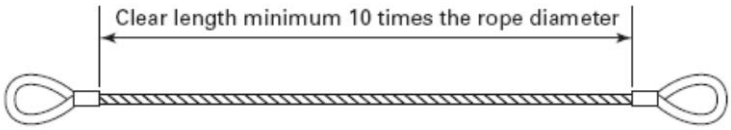

Figure 15 – Minimum Sling Length
For rope with 6x19 and 6x36 classification
or Cable Laid Slings.

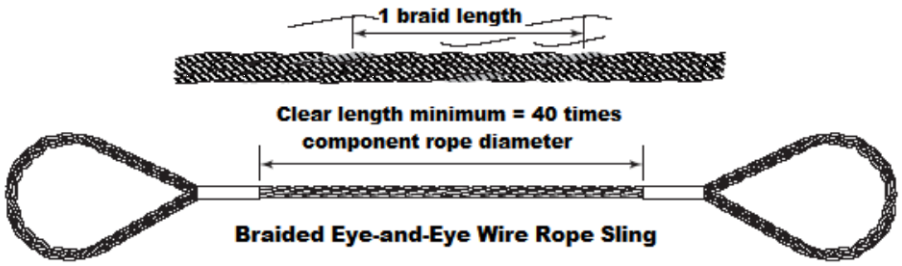

Figure 16-Minimum Braided Sling Length.

(2) Wire rope sling fittings.

(a) You must use fittings according to the fitting manufacturer's directions.

(b) Rate slings with the load capacity of the lowest rated component of the sling. For example, if you use fittings that are rated lower than the sling material itself, identify the sling with the lower rated capacity.

(c) Weld any end attachments, except covers to thimbles, before assembling the sling.

(3) Identification information. All wire rope slings must have legible identification information attached to the sling which includes the information below, see sample tag in Figure 17. For slings in use that are manufactured before the effective date of this rule, you must add the information below before use or at the time the periodic inspection is completed.

(a) Name or trademark of the manufacturer.

(b) Diameter or size.

(c) Rated loads for the types of hitches used and the angle that the load is based on.

(d) Number of legs, if more than one.

(e) Repairing agency, if the sling is ever repaired.

Vert.	Chock	Vert. Basket
2.2 **Tons**	1.6 **Tons**	4.4 **Tons**
Rated Capacity by Angle		
60°	45°	30°
3.8 **Tons**	3.1 **Tons**	2.2 **Tons**

Note: Sample Tag for a ½" Single-Leg Sling 6x19 or 6x36 Classification, Extra Improved Plow Steel (EIPS) Grade Fiber Core (FC) Wire Rope with a Mechanical Splice (Ton = 2,000 lb).

Figure 17-Sample Wire Rope Sling ID Tag.

(4) Inspection.

(a) A qualified person must inspect wire rope slings before their initial use, according to Table 17, both:

(i) When the sling is new; and

(ii) Whenever a repair, alteration, or modification has been done.

(b) A qualified person must perform a visual inspection for damage, each day or shift the wire rope sling is used:

(i) Include all fastenings and attachments;

(ii) Immediately remove any sling from service that is damaged beyond the criteria listed in Table 17; or

(iii) Remove fiber core wire rope slings that have been exposed to temperatures higher than 180 degrees Fahrenheit.

(c) A qualified person must perform periodic inspections on wire rope slings according to Table 17.

(5) Repair, alterations, or modifications.

(a) Repair wire rope slings as follows:

(i) Make sure slings are only repaired by the sling manufacturer or a qualified person;

(ii) Mark the sling to show the repairing agency;

(iii) You must not repair wire rope used in slings, you must replace wire rope. Only end attachments and fittings can be repaired on a wire rope sling.

(b) Modification or alterations to end attachments or fittings are considered as repairs and must conform to all other provisions of this part.

(c) Proof load test repaired slings according to the requirements in subsection (6) of this section.

(6) Proof load tests. Make sure the sling manufacturer or a qualified person proof load tests the following slings before initial use, according to Table 18:

(a) All repaired slings;

(b) All slings incorporating previously used or welded fittings;

(c) For single- or multiple-leg slings and endless slings, you must proof load each leg according to the requirements listed in Table 18 based on fabrication method. The proof load test must not exceed 50% of the component ropes' or structural strands' minimum breaking strength;

Table 17 Wire Rope Sling Inspection and Removal Criteria	
Inspect wire rope slings for the following conditions:	**Perform inspections:**
• Missing or illegible sling identification. • Severe localized abrasion or scraping. • Kinking, crushing, birdcaging, or any other condition resulting in damage to the rope structure. • Evidence of heat damage. • Severe corrosion of the rope, end attachments, or fittings. • End attachments that are cracked, deformed, or worn to the extent that the strength of the sling is substantially affected. • Broken wires: – For strand-laid and single-part slings, ten randomly distributed broken wires in one rope lay, or 5 broken wires in one strand in one rope lay; – For cable-laid slings, 20 broken wires per lay; – For 6-part braided slings, 20 broken wires per braid; – For 8-part braided slings, 40 broken wires per braid. • Hooks that have any of the following conditions: – Any visibly apparent bend or twist from the plane of the unbent hook; – Any distortion causing an increase in throat opening 5%, not to exceed 1/4 inch, or as recommended by the manufacturer; – Wear exceeding 10% of the original section dimension of the hook or its load pin, or as recommended by the manufacturer; – Self-locking mechanism that does not lock. • Other visible damage that raises doubt about the safety of the sling.	• At least once a year for slings in normal service. • At least once a quarter for slings in severe service. • As recommended by a qualified person for slings in special service.

Table 18 Wire Rope Sling Proof Load Test Requirements	
Type of equipment:	**Proof load test:**
• Mechanical splice slings.	Each leg to at least two times the single leg vertical hitch rated load.
• Swaged socket and poured socket slings.	Each leg to at least two times, but not more than 2-1/2, times the single-leg vertical hitch rated load.
Note: For mechanical splice, swaged socket and poured socket slings follow the rope manufacturer's recommendations for proof load testing provided that it is within the above-specified proof load range, including subsection (c) of this subsection.	
• Hand tucked slings, if proof load tested.	To at least one, but not more than 1-1/4, times the single-leg vertical hitch rated load.

(d) The proof load test for components (fittings) attached to single legs must meet the requirements in (c) of this subsection.

(e) Proof load testing for master links must be in accordance with Table 19.

Table 19 Proof Load Test for Master Links on Wire Rope Slings	
• Master links for two-leg bridle slings.	To at least 4 times the single-leg vertical hitch rated load.
• Master links for 3-leg bridle slings.	To at least 6 times the single-leg vertical hitch rated load.
• Master links for 4-leg bridle slings.	To at least 8 times the single-leg vertical hitch rated load.

(7) **Rated load**. The term "rated capacity" is commonly used to describe rated load.

Note: Rated loads are based on the following factors:

- *Strength of sling material;*
- *Design factor;*
- *Type of hitch;*
- *Angle of loading (see Figure 18, Angle of Loading);*
- *Diameter of curvature over which the sling is used (D/d) (see Figure 19, D/d ratio);*
- *Fabrication efficiency.*

(a) You must use wire rope slings within the rated loads shown in Tables 7 through 15 in ASME B30.9-2010. For angles that are not shown in these tables, either use the rated load for the next lower angle or have a qualified person calculate the rated load.

(b) Prohibit the use of horizontal sling angles less than 30 degrees unless recommended by the sling manufacturer or a qualified person. See Figure 18.

(c) Rated loads for slings used in a choker hitch must conform to the values shown in the above referenced tables, provided that the angle of choke is 120 degrees or greater. See Figure 20 and Table 20, Angle of Choke.

(d) Use either Figure 20 and Table 20, the manufacturer, or a qualified person to determine the rated load if the angle of choke in a choker hitch is less than 120 degrees.

(i) Inspect the entire length of the sling including splices, end attachments, and fittings.

(ii) Remove slings from use if any of the conditions in Table 17 are found.

(iii) Keep a record of the most recent periodic inspection available, including the condition of the sling.

Note: An external code mark on the sling is an acceptable means of recording the inspection as long as the code can be traced back to a record.

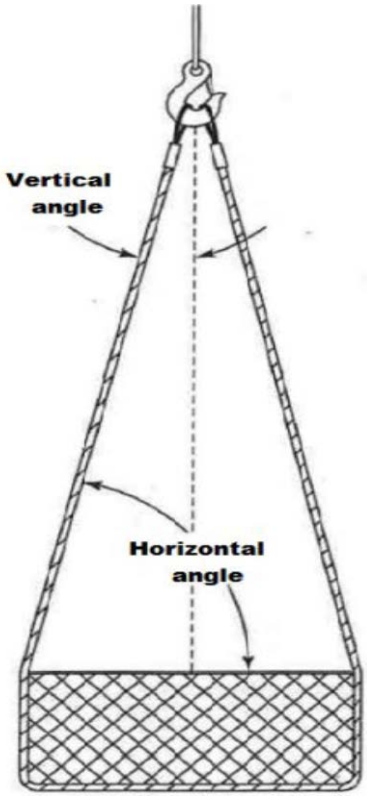

Figure 18-Angle of Loading.

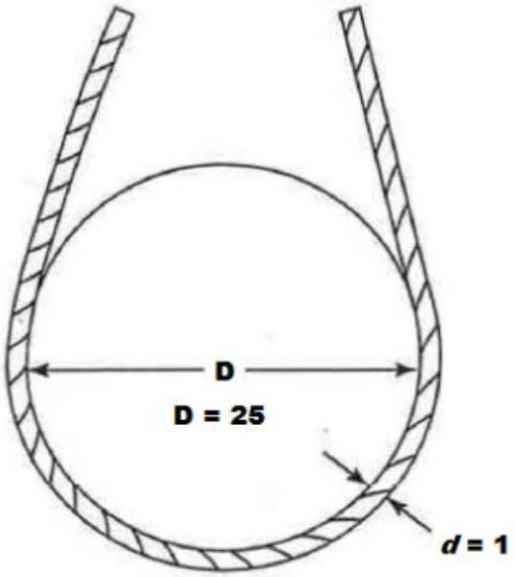

Figure 19-D/*d* Ratio.

Note: When D is 25 times the component rope diameter(d) the D/d ratio is expressed as 25/1.

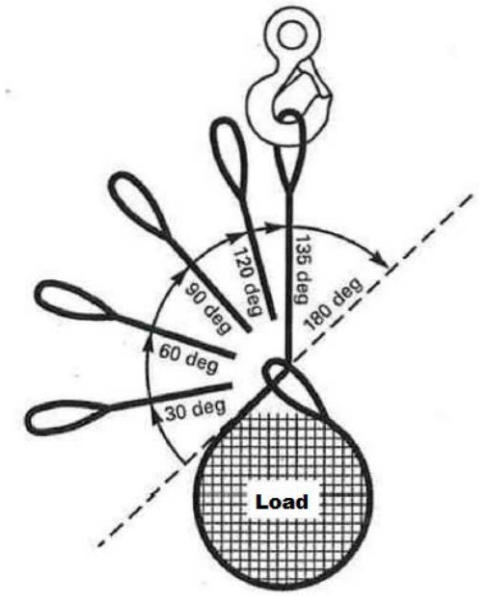

Figure 20-Angle of Choke.

Table 20 Angle of Choke	
Angle of Choke, deg.	**Rated Capacity, %**
Over 120	100
90 – 120	87
60 – 89	74
30 – 59	62
0 – 29	49

Note: Percent of sling rated capacity in a chocker hitch.

(8) Use of wire rope slings.

(a) Hitch the slings in a way that provides control of the load.

(b) Shorten or adjust slings using only the methods approved by the manufacturer or qualified person.

- Do **not** shorten or lengthen by knotting, twisting, or by wire rope clips.

(c) Keep all parts of the human body from between the sling and the load, crane, or hoist hook.

(d) You must cover or blunt protruding ends of strands in splices on slings and bridles.

(e) You must not pull a sling from under a load when the load is resting on the sling.

(f) Prohibit all of the following:

(i) Intentional shock loading;

(ii) Avoid twisting and kinking.

(g) Decrease the rated load of the sling when D/*d* ratios (Figure 19) smaller than 25 to one. Consult the sling manufacturer for specific data or refer to the *Wire Rope Sling User's Manual* (wire rope technical board).

(h) Follow Table 21, Use of Wire Rope Slings or Clips, when using any of the identified wire rope slings or clips. See Figure 14.

(i) You must protect slings in contact with edges, corners, or protrusions with a material of sufficient strength, thickness, and construction to prevent damage to the sling. See Figure 14.

Table 21 Use of Wire Rope Slings or Clips	
If you are using:	**Then:**
Single leg slings used with multiple-leg slings.	Make sure the rating shown is not exceeded in any leg of the multiple-leg sling.
Hand tucked slings are used in a single leg vertical lift.	Do not allow the sling or load to rotate.
Slings made with wire rope clips.	Must not be used as a choker hitch.
U-bolt wire rope clips.	Use only U-bolt wire rope clips that are made of drop-forged steel.
	Follow Table 15 for the number and spacing of the clips.
	Apply the U-bolt so the "U" section is in contact with the dead end of the rope (S*ee Figure 21, Installation and Loading*).

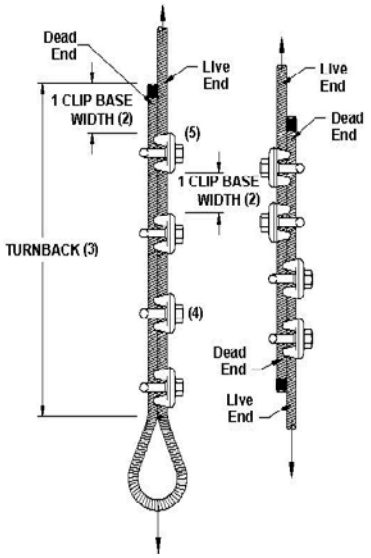

Figure 21-Installation and Loading.
Proper Installation Requires
Correct number of clips for wire rope size
Correct spacing of clips
Correct turnback length
Correct torque on nuts
Correct orientation of saddle live end

[Statutory Authority: RCW 49.17.010, .040, .050, and .060. 16-09-085 (Order 15-08), § 296-155-55805, filed 04/19/16, effective, 05/20/16. Statutory Authority: RCW 49.17.010, .004, .050, and .060. 13-02-068 (Order 12-14), § 296-155-55805, filed 12/31/12, effective 02/01/13. Statutory Authority: RCWs 47.17.010, 49.17.040, 49.17.050, 49.17.440 and 49.17.060. 12-01-086 (Order 08-32), § 296-155-55805, filed 12/20/11, effective 02/01/12.]

WAC 296-155-55810 Metal mesh slings.

(1) Identification information on metal mesh slings. Make sure all slings have legible identification information permanently attached to the sling which includes all of the following information:

(a) Name or trademark of the manufacturer;

(b) Rated loads for the types of hitches used, and the angle they're based on;

(c) Width and gauge;

(d) Number of legs, if more than one;

(e) Individual sling identification (e.g., serial numbers);

(f) Repairing agency, if the sling has ever been repaired.

(2) **Inspection**.

(a) A qualified person must inspect metal mesh slings before their initial use, according to Table 22, both:

(i) When the sling is new; and

(ii) Whenever a repair, alteration, or modification has been done.

(b) A qualified person must perform a visual inspection for damage, each day or shift the metal mesh sling is used. Immediately remove from service any sling damaged beyond the criteria in Table 22.

(c) A qualified person must perform periodic inspections on metal mesh slings according to Table 22.

(i) Inspect the entire length, including splices, end attachments, and fittings.

(ii) Remove slings from use if any of the conditions in Table 22 are found.

(iii) Keep a record of the most recent periodic inspection available, including the condition of the sling.

Note: An external code mark on the sling is an acceptable means of recording the inspection as long as the code can be traced back to a record.

Table 22 Metal Mesh Sling Inspection	
Inspect metal mesh slings for conditions such as the following:	**Perform inspections:**
• Missing or illegible sling identification. • Broken welds along the sling edge. • Broken brazed joints along the sling edge. • Broken wire in any part of the mesh. • Reduction in wire diameter of: – 25% due to abrasion; – 15% due to corrosion. • Lack of flexibility due to the distortion of the mesh. • Distortion of the choker fitting so the depth of the slot is increased by more than 10%. • Distortion of either end fitting so the width of the eye opening is decreased by more than 10%. • A 15% reduction of the original cross-sectional area of any point around the hook opening of the end fitting. • Visible distortion of either end fitting out of its plane. • Cracked end fitting. • Slings in which the spirals are locked or without free articulation. • Fittings that are pitted, corroded, cracked, bent, twisted, gouged, or broken. • Other visible damage that raises doubt about the safety of the sling.	• At least once a year for slings in normal service. • At least once a quarter for slings in severe service. • As recommended by a qualified person for slings in special service.

(3) Repair, alteration, or modifications. Repair metal mesh slings as follows:

(a) Make sure slings are only repaired by the manufacturer or a qualified person;

(b) Straightening of spiral or cross rods, or forcing a spiral into position is prohibited (see Figure 22);

(c) Mark the sling to show the repairing agency;

(d) Replace cracked, broken, bent or damaged metal mesh or components instead of repairing them;

(e) Proof load test repaired slings according to subsection (4) of this section.

(4) Proof load testing.

(a) Make sure the sling manufacturer or a qualified person proof load tests all new and repaired metal mesh slings before initial use;

(b) Use a proof load test that is a minimum of two times the vertical hitch rated load.

(5) Rated load.

> *Note: Rated loads are based on the following factors:*
>
> - *Strength of sling material;*
> - *Design factor;*
> - *Type of hitch;*
> - *Angle of loading.*

(a) You must use metal mesh slings within the rated loads shown in Table 17 in ASME B30.9-2010. For angles that are not shown in these tables, use either the rated load for the next lower angle or one calculated by a qualified person.

(b) Rate slings with the load capacity of the lowest rated component of the sling. For example, if fittings are rated lower than the sling material itself, identify the sling with the lower rated capacity.

(c) The use of horizontal sling angles less than 30 degrees is prohibited, unless recommended by the sling manufacturer or a qualified person.

(d) Rated loads for slings used in a choker hitch must conform to the values shown in the above referenced table, provided that the angle of choke is 120degrees or greater.

(e) Have the manufacturer or a qualified person determine the rated load if the angle of choke in a choker hitch is less than 120 degrees.

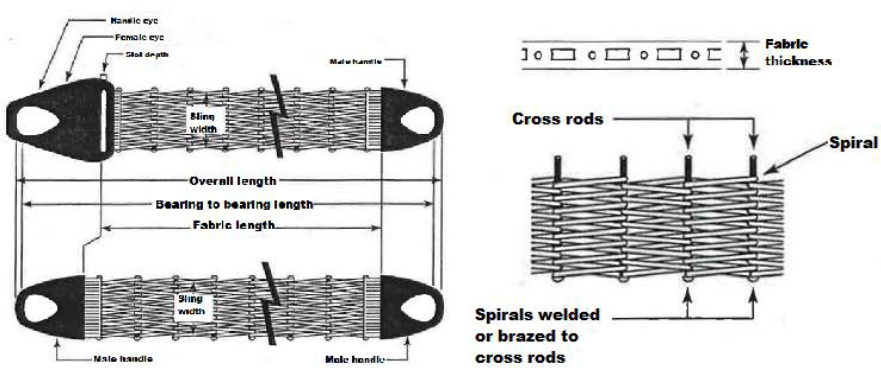

Figure 22-Metal Mesh Slings.

(6) Use of metal mesh slings.

(a) Use metal mesh slings safely by doing all of the following:

(i) Shorten or adjust slings using only the methods approved by the manufacturer or a qualified person;

(ii) Sling legs must not be kinked;

(iii) Hitch slings in a way that provides control of the load.

(b) Keep all parts of the human body from between the sling and the load, crane, or hoist hook.

(c) Prohibit the following:

(i) The use of metal mesh slings as bridles on suspended personnel platforms;

(ii) Intentional shock loading;

(iii) Straightening a spiral or cross rod or forcing a spiral into position;

(iv) Avoid twisting and kinking.

Note: Slings in contact with edges, corners, or protrusions should be protected with a material of sufficient strength, thickness, and construction to prevent damage. See Figure 14.

[Statutory Authority: RCW 49.17.010, .040, .050, and .060. 16-09-085 (Order 15-08), § 296-155-55810, filed 04/19/16, effective, 05/20/16. Statutory Authority: RCWs 47.17.010, 49.17.040, 49.17.050, 49.17.440 and 49.17.060. 12-01-086 (Order 08-32), § 296-155-55810, filed 12/20/11, effective 02/01/12.]

WAC 296-155-55815 Synthetic rope slings.

(1) Identification. Verify all slings have legible identification information attached to the sling which includes the following information:

(a) Name or trademark of the manufacturer;

(b) Manufacturer's code or stock number;

(c) Type of fiber material;

(d) Rated loads for the types of hitches used, and the angle that the load is based on;

(e) Number of legs, if more than one;

(f) Repairing agency, if the sling has ever been repaired.

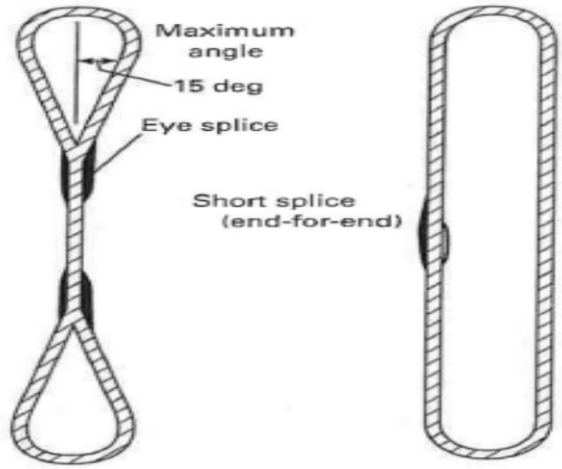

Figure 23-Synthetic Fiber Rope Slings.

(2) Inspection.

(a) A qualified person must inspect synthetic fiber rope slings before their initial use, according to Table 23, both:

(i) When the sling is new; and

(ii) Whenever a repair, alteration, or modification has been done.

(b) A qualified person must perform a visual inspection for damage, each day or shift the synthetic fiber rope sling is used. Immediately remove any sling from service that is damaged beyond the criteria listed in Table 23.

(c) A qualified person must perform periodic inspections on synthetic fiber rope slings, according to Table 23.

(i) Examine each sling and component individually, taking care to expose and examine all surfaces.

(ii) Inspect the entire length including splices, end attachments, and fittings.

(iii) Remove slings from use if any of the conditions in Table 23 are found.

(iv) Keep a record of the most recent periodic inspection available, including the condition of the sling.

Note: An external code mark on the sling is an acceptable means of recording the inspection as long as the code can be traced back to a record.

Table 23 Synthetic Rope Sling Inspection and Removal Criteria	
Inspect synthetic rope slings for the following conditions:	**Perform inspections:**
• Missing or illegible sling identification. • Cuts, gouges, or areas of extensive fiber breakage along the length. • Abraded areas on the rope. • Damage that is estimated to have reduced the effective diameter of the rope by more than 10%. • Uniform fiber breakage along the major part of the length of the rope in the sling such that the entire rope appears covered with fuzz or whiskers. • Inside the rope, fiber breakage, fused or melted fiber (observed by prying or twisting to open the strands) involving damage estimated at 10% of the fiber in any strand or the rope as a whole. • Discoloration, brittle fibers, and hard or stiff areas that may indicate chemical, ultraviolet or heat damage. • Dirt and grit in the interior of the rope structure that is deemed excessive. • Foreign matter that has permeated the rope, making it difficult to handle and attracting and holding grit. • Kinks or distortion in the rope structure, particularly if caused by forcibly pulling on loops (known as hockles). • Melted, hard, or charred areas that affect more than 10% of the diameter of the rope or affect several adjacent strands along the length that affect more than 10% of strand diameters. • Poor condition of thimbles or other components manifested by corrosion, cracks, distortion, sharp edges, or localized wear. • Hooks that have any of the following conditions: – Any visibly apparent bend or twist from the plane of the unbent hook; – Any distortion causing an increase in throat opening 5%, not to exceed 1/4 inch, or as recommended by the manufacturer;	• At least once a year for slings in normal service. • At least once a quarter for slings in severe service. • As recommended by a qualified person for slings in special service.

– Wear exceeding 10%, of the original section dimension of the hook or its load pin, or as recommended by the manufacturer; – Self-locking mechanism that does not lock. • Other visible damage that raises doubt about the safety of the sling.	

(3) Repair, alteration, or modifications. Meet the following requirements when repairing synthetic rope slings:

(a) Synthetic rope slings must only be repaired by the manufacturer or a qualified person;

(b) Mark the sling to show the repairing agency;

(c) Use components that meet the requirements of this part for sling repair;

(d) Do not repair slings by knotting or resplicing existing sling ropes;

(e) Proof load test repaired slings according to the requirements in subsection (4) of this section.

(4) Proof load test. The sling manufacturer or a qualified person must proof load test repaired slings and slings incorporating previously used or welded fittings before initial use, according to Table 24:

Table 24 Synthetic Rope Sling Proof Load Requirements

Type of equipment:	Proof load test:
• Single leg slings. • Multiple leg slings. • Endless slings. • Fittings attached to single legs.	To a minimum of two times the single leg vertical hitch rated load.
• Master links for two-leg bridle slings.	To a minimum of 4 times the single leg vertical hitch rated load.
• Master links for 3-leg bridle slings.	To a minimum of 6 times the single leg vertical hitch rated load.
• Master links for 4-leg bridle slings.	To a minimum of 8 times the single leg vertical hitch rated load.

(5) Rated load.

Note: Rated loads are based on the following factors:

- *Strength of the sling material;*
- *Design factor;*
- *Type of hitch (see Figure 24, Hitch Types for Synthetic Rope Slings);*
- *Angle of loading (see Figure 18, Angle of Loading);*
- *Diameter of curvature over which the sling is used (see Figure 19, D/d Ratio).*

(a) You must use synthetic rope slings within the rated loads shown in Tables 18 and 19 in ASME B30.9-2010. For angles that are not shown in these tables, either use the rated load for the next lower angle or one calculated by a qualified person.

(b) Rate slings with the load capacity of the lowest rated component of the sling. For example, if you use fittings that are rated lower than the sling material itself, identify the sling with the lower-rated capacity.

(c) The use of horizontal sling angles less than 30 degrees is prohibited, unless recommended by the sling manufacturer or a qualified person. (See Figure 18.)

(d) Rated loads for slings used in a choker hitch must conform to the values shown in the above referenced tables, provided that the angle of choke is 120 degrees or greater.

(e) Use Figure 20, the manufacturer, or a qualified person to determine the rated load if the angle of choke in a choker hitch is less than 120 degrees.

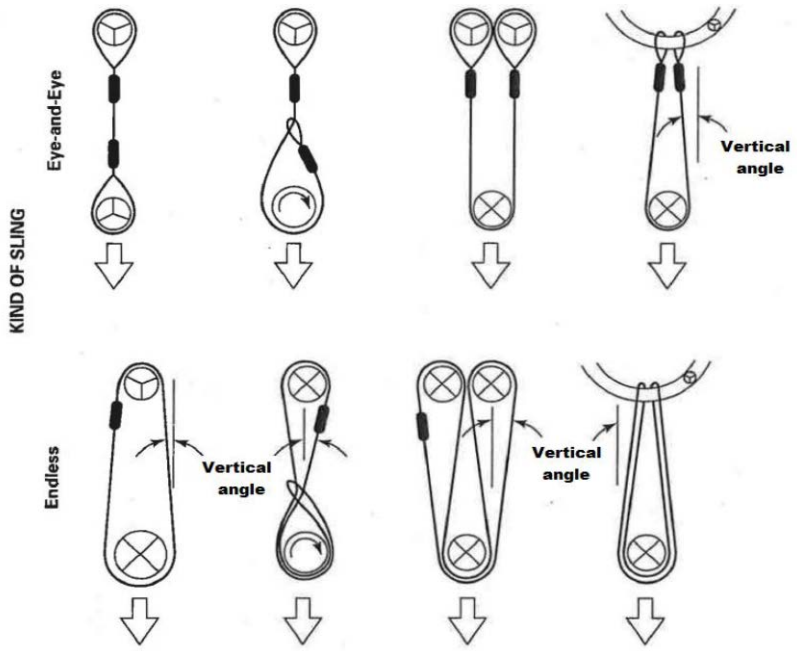

Figure 24-Hitch Types for Synthetic Rope

The symbols below represent load or support in contact with the rope sling. The contact surface diameter divided by the rope diameter is designated *D/d* ratio as described in Figure 19.

Represents a contact surface which must have a diameter of curvature at least double the diameter of the rope from which the sling is made.

Represents a contact surface which must have a diameter of curvature at least 8 times the diameter of the rope.

Represents a load in choker hitch and illustrates the rotary force on the load and/or the slippage of the rope in contact with the load. Diameter of curvature of load surface must be at least double the diameter of the rope.

Note: Legs 5 degrees or less from vertical may be considered vertical. For slings more than 5 degrees vertical, the actual angle must be used.

(6) Use of synthetic ropes.

(a) Use synthetic rope slings safely by doing all of the following:

(i) Shorten or adjust slings only with methods approved by the manufacturer or qualified person;

(ii) You must not shorten or lengthen slings by knotting or twisting;

(iii) Hitch slings in a way that provides control of the load;

(iv) You must protect slings in contact with edges, corners, protrusions, or abrasive surfaces with a material of sufficient strength, thickness, and construction to prevent damage, see Figure 14;

(v) Do not allow the sling or load to rotate when hand-tucked slings are used in a single-leg vertical lift application; and

(vi) Keep all parts of the human body from between the sling and the load, crane, or hoist hook.

(b) All of the following is prohibited:

(i) Intentional shock loading; and

(ii) Twisting or kinking.

[Statutory Authority: RCW 49.17.010, .040, .050, and .060. 16-09-085 (Order 15-08), § 296-155-55815, filed 04/19/16, effective, 05/20/16. Statutory Authority: RCWs 47.17.010, 49.17.040, 49.17.050, 49.17.440 and 49.17.060. 12-01-086 (Order 08-32), § 296-155-55815, filed 12/20/11, effective 02/01/12.]

WAC 296-155-55820 Synthetic webbing slings.

(1) **Identification**. Make sure all slings have legible identification information permanently attached to the sling which includes the following information:

(a) Name or trademark of the manufacturer;

(b) Manufacturer's code or stock number;

(c) Rated loads for the types of hitches used, and the angle that the load is based on;

(d) Type of synthetic web material;

(e) Number of legs, if more than one;

(f) Repairing agency, if the sling is ever repaired.

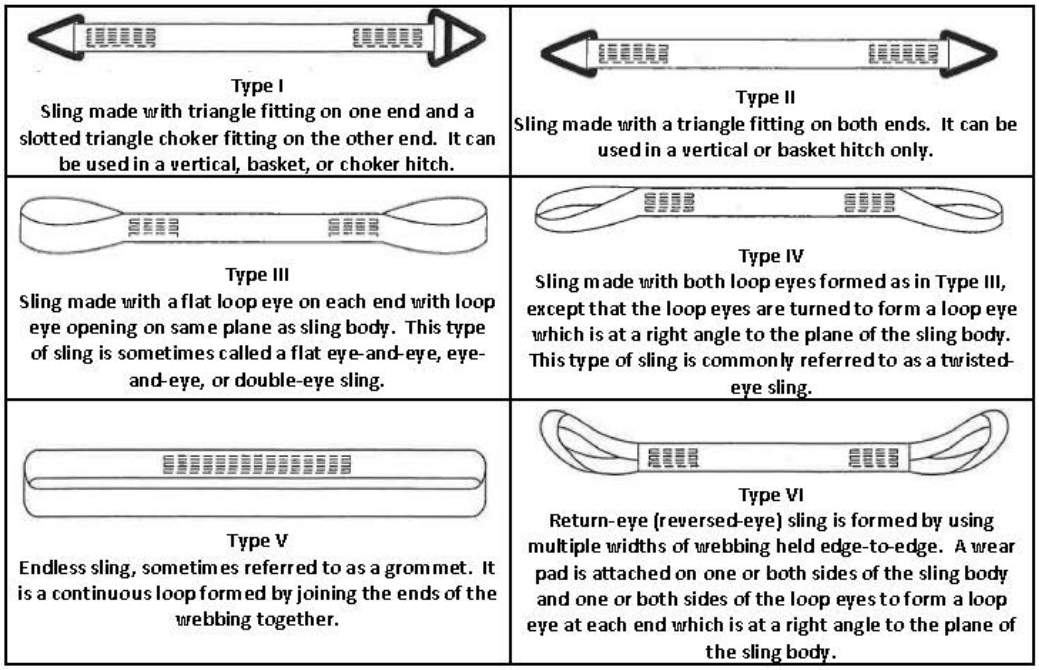

Figure 25-Synthetic Webbing Slings.

(2) Inspection.

(a) A qualified person must inspect synthetic webbing slings before their initial use, according to Table 25:

(i) When the sling is new; and

(ii) Whenever a repair, alteration, or modification has been done.

(b) A qualified person must perform a visual inspection for damage, each day or shift the synthetic webbing sling is used. Immediately remove from service any sling that is damaged beyond the criteria listed in Table 25.

(c) A qualified person must perform periodic inspections on synthetic webbing slings, according to Table 25.

(i) Examine each sling and component individually, taking care to expose and examine all surfaces.

(ii) Remove slings from use if any of the conditions in Table 25 are found.

(iii) Keep a written record of the most recent periodic inspection available, including the condition of the sling.

Note: An external code mark on the sling is an acceptable means of recording the inspection as long as the code can be traced back to a record.

Table 25 Synthetic Webbing Sling Inspection

Inspect synthetic webbing slings for the following conditions:	Perform inspections:
• Missing or illegible sling identification. • Acid or caustic burns. • Melting or charring on any part of the sling • Holes, tears, cuts or snags. • Broken or worn stitching in load bearing splices. • Excessive abrasive wear. • Knots in any part of the sling. • Discoloration, brittle fibers, and hard or stiff areas that may indicate chemical or ultraviolet/sunlight damage. • Fittings that are pitted, corroded, cracked, bent, twisted, gouged or broken. • Hooks that have any of the following conditions: – Any visibly apparent bend or twist from the plane of the unbent hook; – Any distortion causing an increase in throat opening 5%, not to exceed 1/4 inch, or as recommended by the manufacturer; – Wear exceeding 10%, of the original section dimension of the hook or its load pin, or as recommended by the manufacturer; – Self-locking mechanism that does not lock. • Other visible damage that causes doubt about the safety of continued use of the sling.	• At least once a year for slings in normal service. • At least once a quarter for slings in severe service. • As recommended by a qualified person for slings in special service.

(3) Repair, alterations, or modifications.

(a) Meet the following requirements when repairing synthetic webbing slings:

(i) Slings are only to be repaired by the manufacturer or a qualified person;

(ii) Temporary repairs are prohibited;

(iii) Mark the sling to show the repairing agency;

(iv) Components used for sling repair must meet the requirements of this part;

(v) You must not repair cracked, broken, melted, or otherwise damaged webbing material or fittings other than hooks;

(vi) You must not repair load bearing splices;

(b) Proof load test repaired slings according to the requirements in subsection (4) of this section.

(4) Proof load test. The sling manufacturer or a qualified person must proof load test repaired slings and slings that have been altered or modified before initial use according to Table 26:

Table 26 Synthetic Webbing Sling Proof Test Requirements

Type of equipment:	Proof load test:
• Single leg slings.. • Multiple leg slings. • Endless slings. • Fittings attached to single legs.	To a minimum of two times the single leg vertical hitch rated load.
• Master links for two-leg bridle slings	To a minimum of 4 times the single leg vertical hitch rated load.
• Master links for 3-leg bridle slings	To a minimum of 6 times the single leg vertical hitch rated load.
• Master links for 4-leg bridle slings	To a minimum of 8 times the single leg vertical hitch rated load.

(5) Rated loads.

Note: Rated loads are based on the following factors:

- *Strength of the material;*
- *Design factor;*
- *Type of hitch;*
- *Angle of loading (see Figure 18, Angle of Loading);*
- *Fabrication efficiency;*
- *Diameter of curvature over which the sling is used.*

(a) You must use synthetic web slings within the rated loads shown in Tables 20 through 24 in ASME B30.9-2010. For angles that are not shown in these tables, use either the rated load for the next lower angle or one calculated by a qualified person.

(b) Rate slings with the load capacity of the lowest rated component of the sling. For example, if you use fittings that are rated lower than the sling material itself, identify the sling with the lower-rated capacity.

(c) The use of horizontal sling angles less than 30 degrees is prohibited, unless recommended by the sling manufacturer or a qualified person. (See Figure 18.)

(d) Use Figure 20, Angle of Choke, the manufacturer, or a qualified person to determine the rated load if the angle of choke in a choker hitch is less than 120 degrees.

(e) Rated loads for slings used in a choker hitch must conform to the values shown in the above referenced tables, provided that the angle of choke is 120 or greater. (See Figure 20.)

(6) Use of synthetic webbing slings.

(a) Use synthetic webbing slings safely by meeting all of the following requirements:

(i) Shorten or adjust slings only with methods approved by the manufacturer or qualified person;

(ii) You must not shorten or lengthen slings by knotting or twisting;

(iii) Hitch slings in a way that provides control of the load;

(iv) Protect slings with material of sufficient strength, thickness, and construction to prevent damage from sharp edges, corners, protrusions, or abrasive surfaces. See Figure 14;

(v) Keep all parts of the human body from between the sling and the load, crane, or hoist hook;

(vi) Fittings must be of a minimum breaking strength equal to that of the sling.

(b) Webbing. Synthetic webbing must be of uniform thickness and width and selvage edges must not split from the webbing's width.

(c) Intentional shock loading is prohibited.

[Statutory Authority: RCW 49.17.010, .040, .050, and .060. 16-09-085 (Order 15-08), § 296-155-55820, filed 04/19/16, effective, 05/20/16. Statutory Authority: RCW 49.17.010, .004, .050, and .060. 13-02-068 (Order 12-14), § 296-155-55820, filed 12/31/12, effective 02/01/13. Statutory Authority: RCWs 47.17.010, 49.17.040, 49.17.050, 49.17.440 and 49.17.060. 12-01-086 (Order 08-32), § 296-155-55820, filed 12/20/11, effective 02/01/12.]

WAC 296-155-55825 Synthetic roundslings.

(1) **Identification**. All synthetic roundslings must be marked with the following information:

(a) Name or trademark of the manufacturer;

(b) Manufacturer's code or stock number;

(c) Core material;

(d) Cover material if different from core material;

(e) Rated loads for the types of hitches used, and the angle that the load is based on;

(f) Number of legs, if more than one;

(g) Repairing agency, if the sling is ever repaired.

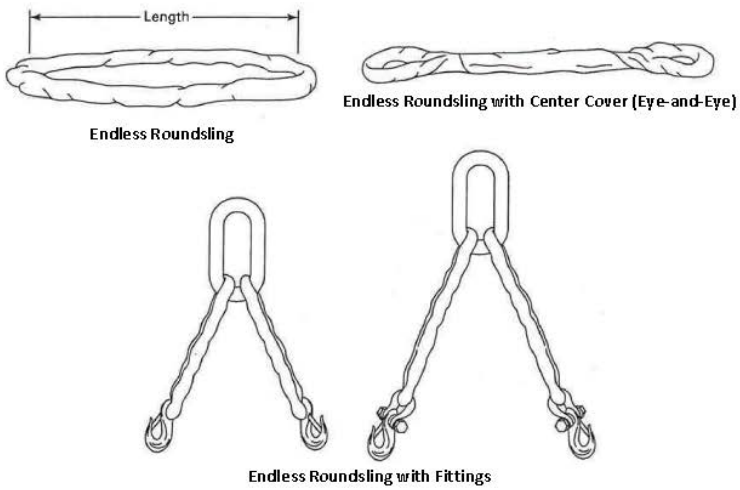

Figure 26-Synthetic Roundslings.

(2) Inspection.

(a) A qualified person must inspect synthetic roundslings before their initial use, according to Table 27, both:

(i) When the sling is new; and

(ii) Whenever a repair, alteration, or modification has been done.

(b) A qualified person must perform a visual inspection for damage, each day or shift the synthetic roundsling is used. Immediately remove from service any sling that is damaged beyond the criteria listed in Table 27.

(c) A qualified person must perform periodic inspections on synthetic roundslings, according to Table 27.

(i) Examine each sling and component individually, taking care to expose and examine all surfaces.

(ii) Remove slings from use if any of the conditions in Table 27 are found.

(iii) Keep a written record of the most recent periodic inspection available, including the condition of the sling.

Note: An external code mark on the sling is an acceptable means of recording the inspection as long as the code can be traced back to a record.

Table 27 Synthetic Roundsling Inspection and Removal Criteria	
Inspect synthetic roundslings for conditions such as the following:	**Perform inspections:**
• Missing or illegible sling identification. • Acid or caustic burns. • Evidence of heat damage. • Holes, tears, cuts, abrasive wear or snags that expose the core yarns. • Broken or damaged core yarns. • Weld spatter that exposes core yarns. • Roundslings that are knotted. • Fittings that are pitted, corroded, cracked, bent, twisted, gouged or broken. • Hooks that have any of the following conditions: – Any visibly apparent bend or twist from the plane of the unbent hook; – Any distortion causing an increase in throat opening 5%, not to exceed 1/4 inch, or as recommended by the manufacturer; – Wear exceeding 10%, of the original section dimension of the hook or its load pin, or as recommended by the manufacturer; – Self-locking mechanism that does not lock. • Other visible damage that causes doubt about the safety of continued use of the sling.	• At least once a year for slings in normal service. • At least once a quarter for slings in severe service. • As recommended by a qualified person for slings in special service.

(3) Repair, alterations, or modifications.

(a) Meet the following requirements when repairing synthetic roundslings:

(i) Only the manufacturer or a qualified person can repair slings;

(ii) Mark the sling to show the repairing agency;

(iii) Only use components that meet the requirements of this rule to repair slings;

(iv) Replace cracked, broken, or bent fittings other than hooks; do not repair them.

(b) Both of the following are prohibited:

(i) Temporary repairs of roundslings or fittings; and

(ii) The repair of load bearing yarns.

Proof load test repaired slings according to the requirements in subsection (4) of this section.

(4) Proof load tests. The sling manufacturer or a qualified person must proof load test repaired slings and slings that have been altered or modified before initial use, according to Table 28:

Table 28 Synthetic Roundslings Proof Test Requirements	
Type of equipment:	**Proof load test:**
• Single leg slings. • Multiple leg slings. • Endless slings. • Fittings attached to single legs.	To a minimum of two times the single leg vertical hitch rated load.
• Master links for two-leg bridle slings.	To a minimum of 4 times the single leg vertical hitch rated load.
• Master links for 3-leg bridle slings.	To a minimum of 6 times the single leg vertical hitch rated load.
• Master links for 4-leg bridle slings.	To a minimum of 8 times the single leg vertical hitch rated load.

(5) Rated loads.

Note: Rated loads are based on the following factors:

- *Strength of the material.*
- *Design factor.*
- *Type of hitch.*
- *Angle of loading. (See Figure 18, Angle of Loading.)*
- *Diameter of curvature over which the sling is used.*

(a) You must use synthetic roundslings within the rated loads shown in Table 25 in ASME B30.9-2010. For angles that are not shown in these tables, either use the rated load for the next lower angle or one calculated by a qualified person

(b) Rate slings with the load capacity of the lowest rated component of the sling. For example, if you use fittings that are rated lower than the sling material itself, identify the sling with the lower rated capacity.

(c) Prohibit the use of horizontal sling angles less than 30 degrees unless recommended by the sling manufacturer or a qualified person.

(d) Use Figure 18, Angle of Choke, the manufacturer, or a qualified person to determine the rated load if the angle of choke in a choker hitch is less than 120 degrees.

(e) Rated loads for slings used in a choker hitch must conform to the values shown in the above referenced Table 20 provided that the angle of choke is 120 degrees or greater. (See Figure 18.)

(6) Use of synthetic roundslings.

(a) Use methods approved by the manufacturer or qualified person to shorten or adjust slings. You must not shorten or lengthen slings by knotting or twisting.

(b) Hitch slings in a way that provides control of the load.

(c) Protect slings with material of sufficient strength, thickness, and construction to prevent damage from sharp edges, corners, protrusions, or abrasive surfaces. (See Figure 14.)

(d) Keep all parts of the human body from between the sling and the load, crane, or hoist hook.

(e) Intentional shock loading is prohibited.

[Statutory Authority: RCW 49.17.010, .040, .050, and .060. 16-09-085 (Order 15-08), § 296-155-55825, filed 04/19/16, effective, 05/20/16. Statutory Authority: RCWs 47.17.010, 49.17.040, 49.17.050, 49.17.440 and 49.17.060. 12-01-086 (Order 08-32), § 296-155-55825, filed 12/20/11, effective 02/01/12.]

WAC 296-155-561 Rigging hardware.

[Statutory Authority: RCW 49.17.010, 49.17.040, 49.17.050, 49.17.440 and 49.17.060. 12-01-086 (Order 08-32), § 296-155-561, filed 12/20/11, effective 02/01/12.]

WAC 296-155-56100 General requirements.

(1) **Inspections**.

(a) A qualified person must perform an inspection on all hardware according to Table 29, each day before using. If a daily inspection is not feasible because the hardware is in a semipermanent or inaccessible location, a periodic inspection is allowed instead of daily.

(b) You must remove hardware from service when it shows any conditions listed in Table 29, or any other hazardous condition.

Table 29 Hardware Inspection
For all hardware, inspect for the following:
• Missing or illegible identification. • For shackles, missing or illegible manufacturer's name or trademark and/or rated load identification.
• Indications of heat damage, including weld spatter or arc strikes.
• Excessive pitting or corrosion.
• Load bearing components that are: - Bent. - Twisted. - Distorted. - Stretched. - Elongated. - Cracked. - Broken.
• Excessive nicks or gouges. For riggings blocks, excessive nicks, gouges and wear.
• 10% reduction of the original or catalog dimension at any point. For shackles, this includes at any point around the body or pin.
• Excessive thread damage or wear, where applicable.
• Evidence of unauthorized welding or modification.
• Any other conditions that cause doubt as to the safety of continued use.
• On **Shackles,** also inspect for incomplete pin engagement.
• On **swivels and swivel hoist rings**, check for lack of ability to freely rotate or pivot.
• On **Compression hardware**, also check for: - Unauthorized replacement components. - Insufficient number of wire rope clips. - Improperly tightened wire rope clips. - Damaged wire rope. - Indications of wire rope slippage. - Improper assembly.
• On **Swivels,** check for loose or missing nuts, bolts, cotter pins, snap rings, or other fasteners and retaining devices.
• On **Blocks** check for: - Loose or missing nuts, bolts, cotter pins, snap rings, or other fasteners and retaining devices. - Misalignment or wobble in sheaves. - Excessive sheave groove corrugation or wear.

(2) Repairs, alterations, or modifications.

(a) You must repair, alter, or modify rigging hardware according to the hardware manufacturer or a qualified person.

(b) Welding of hardware is prohibited unless authorized by the manufacturer.

(c) Replacement parts must meet or exceed the original rigging hardware manufacturer's specifications.

(3) Hardware use.

(a) You must select hardware with the characteristics suitable for the application and environment where it will be used.

(b) You must not exceed the rated load of the hardware.

(c) At least one of the workers using rigging hardware must meet the requirements of WAC 296-155-53306.

[Statutory Authority: RCW 49.17.010, .040, .050, and .060. 16-09-085 (Order 15-08), § 296-155-56100, filed 04/19/16, effective, 05/20/16. Statutory Authority: RCW 49.17.010, .004, .050, and .060. 13-02-068 (Order 12-14), § 296-155-56100, filed 12/31/12, effective 02/01/13. Statutory Authority: RCWs 47.17.010, 49.17.040, 49.17.050, 49.17.440 and 49.17.060. 12-01-086 (Order 08-32), § 296-155-56100, filed 12/20/11, effective 02/01/12.]

WAC 296-155-56105 Shackles.

(1) Pins must be connected to the choking eye of the sling when a shackle is used in a choker hitch.

(2) Screw pins must be:

(a) Fully engaged, with the shoulder in contact with the shackle body (see Figure 27, Typical Shackle Components).

(b) Rigged in a way that keeps the pin from unscrewing while in use.

(c) Secured from rotation or loosening if used for long-term installations.

(3) You must keep cotter pins in good working condition.

(4) If the shackle is side loaded, reduce the rated load, according to the recommendations of the manufacturer or a qualified person (see Figure 28, Side Loading).

Note: See Figure 29, Shackle Types, for examples of types of shackles covered by this rule.

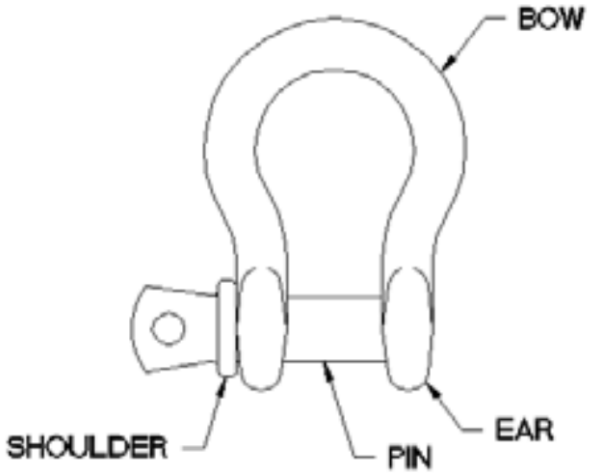

Figure 27-Typical Shackle Components.

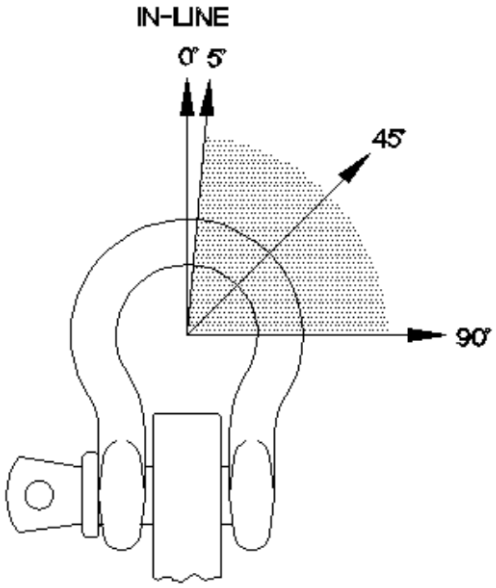

Side Loading Angle, deg.	% Rated Load Reduction
In-line (0) to 5	None
6 to 45	30%
46 to 90	50%
Over 90	Not permitted unless authorized by manufacturer or qualified person

Figure 28-Side Loading.

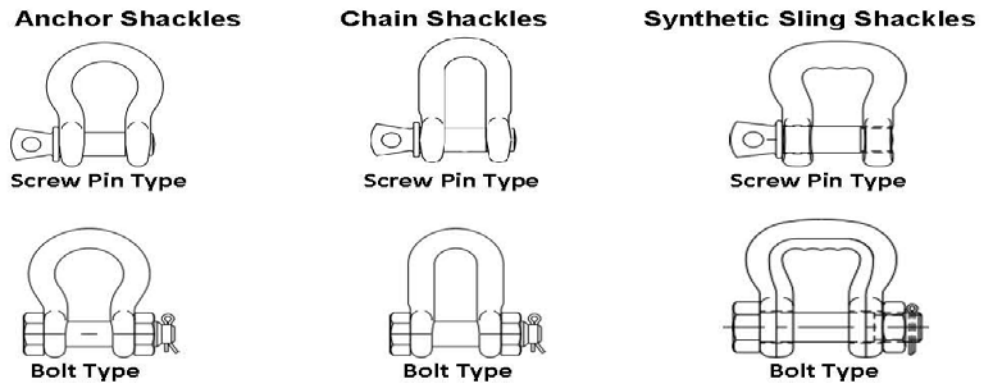

Figure 29-Shackle Types.

[Statutory Authority: RCW 49.17.010, .040, .050, and .060. 16-09-085 (Order 15-08), § 296-155-56105, filed 04/19/16, effective, 05/20/16. Statutory Authority: RCWs 47.17.010, 49.17.040, 49.17.050, 49.17.440 and 49.17.060. 12-01-086 (Order 08-32), § 296-155-56105, filed 12/20/11, effective 02/01/12.]

WAC 296-155-56110 Adjustable hardware.

(1) **Turnbuckles**. Follow these rigging practices for turnbuckles:

(a) Locking nuts, if used, must be compatible with the threads of the turnbuckle end. (See Figure 30, Turnbuckle Types.)

(b) For long-term installations, secure turnbuckles in a way that prevents unscrewing.

(c) Turnbuckle end fitting threads must be fully engaged in the body threads.

(d) Components, including pins, bolts, nuts, or cotter pins used with jaw ends, must be in good working condition prior to use.

Note:

- *See Figure 30 for types of turnbuckles covered by this rule.*
- *Pipe bodies conceal the length of thread engagement. Verify full engagement before loading. (See Figure 30.)*

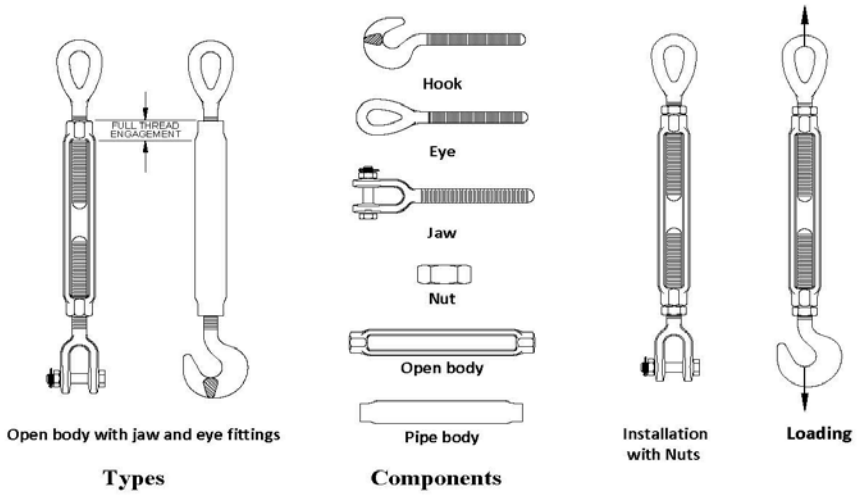

Figure 30-Turnbuckle Types.

(2) Eyebolts. Follow these rigging practices for eyebolts:

(a) You must only use eyebolts not shouldered to the load for in-line loads. (See Figure 31, Eyebolts.)

(b) You must use only shoulder eyebolts for angular lifting.

(i) The shoulder must be flush and securely tightened against the load.

(ii) You must reduce the working load limit (WLL) as shown in Figure 31.

(iii) For angular lifts, you must align the plane of the eye with the direction of loading. If needed, flat washers can be used under the shoulder to position the plane of the eye. (See Figure 31.)

(c) When using eyebolts in a tapped blind hole, the effective thread length must be at least one and one-half times the diameter of the bolt for engagement in steel. (See Figure 31.) For other engagements, or engagements in other materials, contact the eyebolt manufacturer or a qualified person.

(d) When using eyebolts in a tapped through-hole of less than one diameter thickness, you must use a nut under the load, and must be fully engaged and tightened securely against the load. (See Figure 31.)

(e) When eyebolts are used in an untapped through-hole, the nut under the load must be fully engaged. If the eyebolt is not shouldered to the load, a second nut on top of the load should be used if possible. (See Figure 31.)

Note: See Figure 31 for examples of eyebolts covered by this rule.

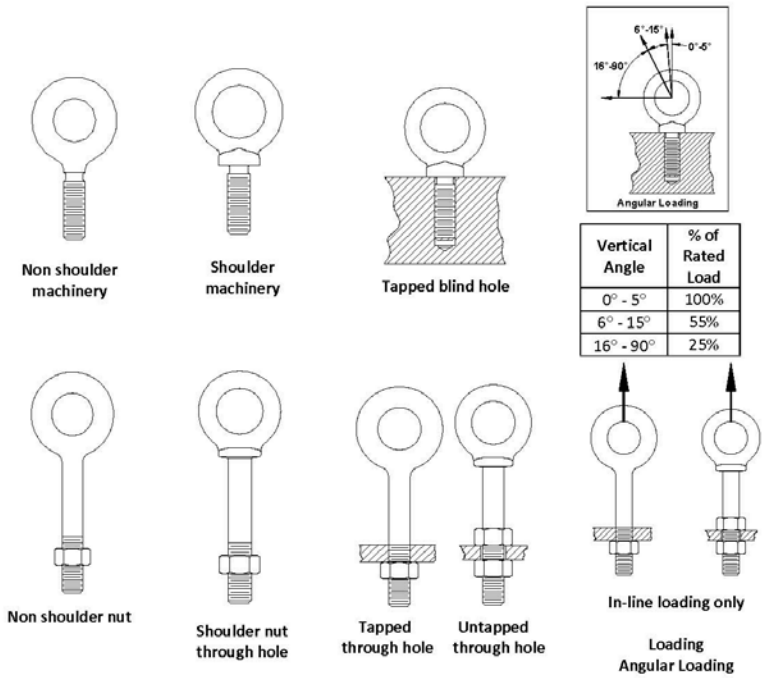

Figure 31-Eyebolts.

(3) Eye nuts. Follow these rigging practices for eye nuts (see Figure 32, Eye Nuts):

(a) The threads of eye nuts must be fully engaged;

(b) You must only use nuts for in-line loads;

(c) Components must be in good working condition prior to use.

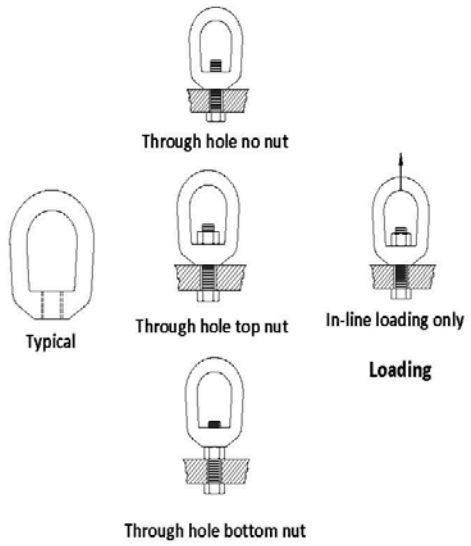

Figure 32-Eye Nuts.

(4) Swivel hoist rings. Follow these rigging practices for swivel hoist rings:

(a) The swivel hoist ring working load limit (WLL) must meet or exceed the anticipated angular rigging tension. (See Figure 33, Angle of Loading.)

(b) You must tighten swivel hoist rings to the torque specifications of the manufacturer.

(c) The swivel hoist ring must be free to rotate and pivot without interference during lifting. (See Figure 34, Swivel Hoist Rings.)

(d) The load applied to the swivel hoist ring must be centered in the bail to prevent side loading.

(e) Any attached lifting component must be narrower than the inside width of the bail to avoid spreading.

(f) When using swivel hoist rings in a threaded-hole, the effective thread length must be 1 1/2 times the diameter of the bolt for steel. (See Figure 34.) For other thread engagements or engagement in other materials, contact the manufacturer or a qualified person.

(g) When using swivel hoist rings in a through-hole application, you must use a nut and washer. A washer and nut must be in accordance with the manufacturer's recommendations. The nut must be fully engaged. (See Figure 34.)

(h) The bushing flange must fully contact the load surface. (See Figure 34.)

(i) You must not use spacers or washers between the bushing flange and the mounting surface of the load being lifted.

Note: See Figure 34 for examples of swivel hoist rings covered by this rule.

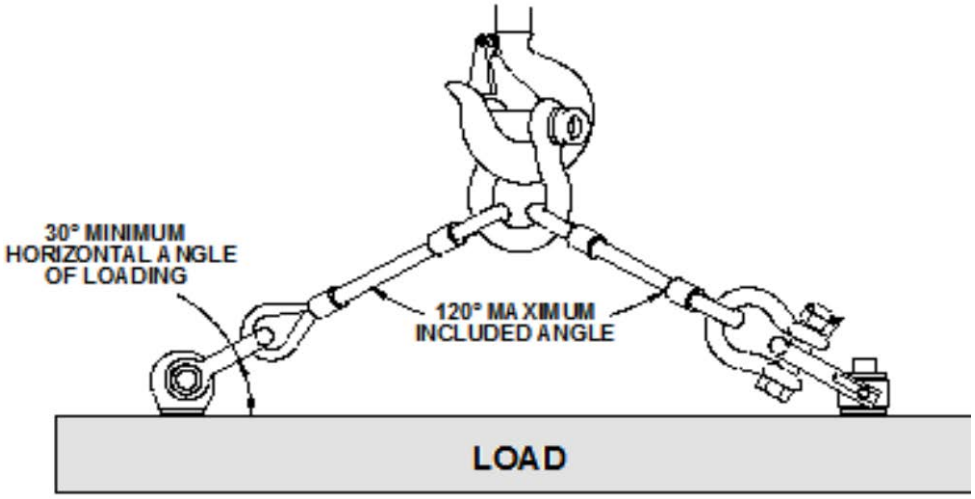

Figure 33-Angle of Loading (Adjustable Hardware).

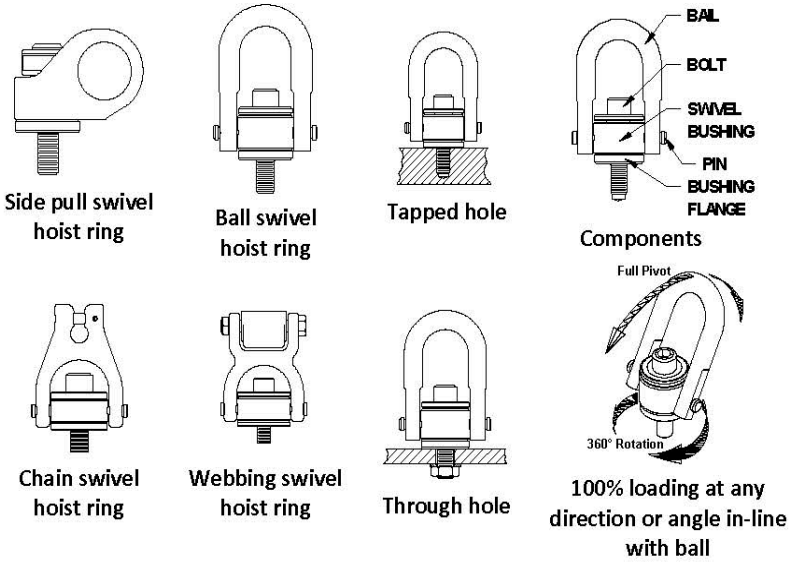

Figure 34-Swivel Hoist Rings.

[Statutory Authority: RCW 49.17.010, .040, .050, and .060. 16-09-085 (Order 15-08), § 296-155-56110, filed 04/19/16, effective, 05/20/16. Statutory Authority: RCWs 47.17.010, 49.17.040, 49.17.050, 49.17.440 and 49.17.060. 12-01-086 (Order 08-32), § 296-155-56110, filed 12/20/11, effective 02/01/12.]

WAC 296-155-56115 Compression hardware.

(1) Wire rope clips. Follow these assembly requirements for wire rope clips:

(a) Before installing a wire rope clip on plastic coated or plastic impregnated wire rope, you must consult the wire rope clip manufacturer, wire rope manufacturer or a qualified person.

(b) For U-bolt clips used to create end terminations, you must place the saddle on the live end of the wire rope, with the U-bolt on the dead end side. (See Figure 35, Wire Rope Clips.)

(c) You must test the assembly by loading the connection to at least the expected working load. After unloading, retighten the wire rope clips to the torque recommended by the manufacturer or a qualified person.

(d) Follow the manufacturer's recommendations for the minimum number of clips, spacing and turn-back measurements, and to the recommended torque values. In the absence of the manufacturer's recommendations follow Table 15.

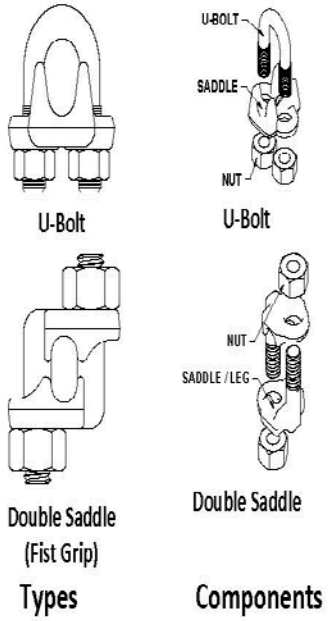

Figure 35-Wire Rope Clips.

(2) Wedge sockets. Follow these assembly requirements for wedge sockets:

(a) You must assemble wedge sockets as recommended by the manufacturer or a qualified person.

(b) Before installing a wedge socket on plastic coated or plastic impregnated wire rope you must consult the wedge socket manufacturer, wire rope manufacturer or a qualified person.

(c) The assembler must match the proper wedge with the socket for the wire rope to be installed. You must not interchange edges between different manufacturers' sockets or models.

(d) The live end of the wire rope in the wedge socket cavity must be in alignment with the socket's pin. (See Figure 36, Wedge Sockets.)

(e) The length of the dead end tail of the wire rope must be as required by the manufacturer or a qualified person.

(f) You must secure the tail of the dead end of the wire rope extending beyond the wedge socket as recommended by the wedge socket manufacturer or a qualified person.

(g) You must not secure the dead end of the wire rope to the live end of the wire rope in a way that restricts the movement of the live end. (See Figure 36.)

(h) After assembly you must load the connection to fully seat the wedge before use.

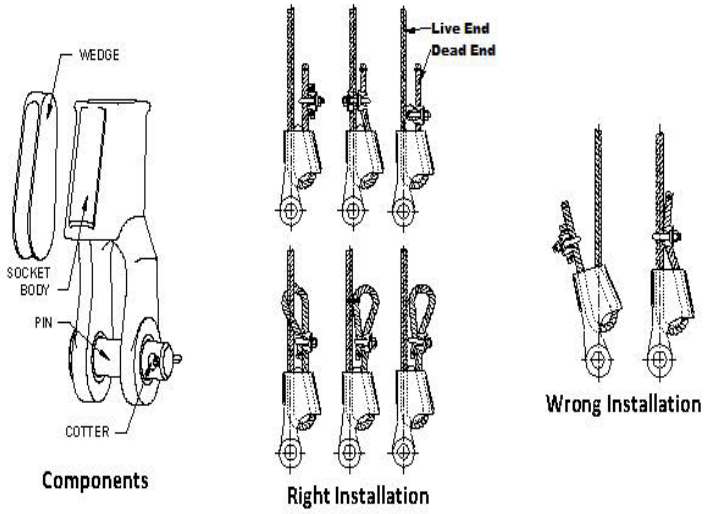

Figure 36-Wedge Sockets.

[Statutory Authority: RCW 49.17.010, .040, .050, and .060. 16-09-085 (Order 15-08), § 296-155-56115, filed 04/19/16, effective, 05/20/16. Statutory Authority: RCWs 47.17.010, 49.17.040, 49.17.050, 49.17.440 and 49.17.060. 12-01-086 (Order 08-32), § 296-155-56115, filed 12/20/11, effective 02/01/12.]

WAC 296-155-56120 Links, rings, and swivels.

(1) Follow these rigging practices for links and rings:

(a) The link or ring must be of the proper shape and size to make sure it seats properly in the hook or lifting device.

(b) Multiple slings or rigging hardware gathered in a link or ring must not exceed a 120 degree included angle. (See Figure 33, Angle of Loading.)

> *Note: See Figure 37, Links and Rings, for examples of links and rings covered by this rule.*

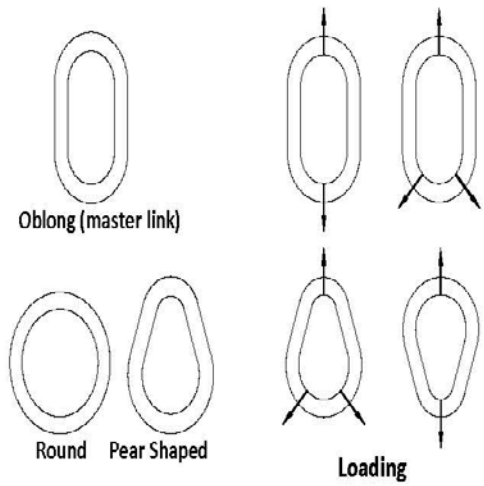

Figure 37-Links and Rings.

(2) Follow these rigging practices for swivels:

(a) You must only use swivels on in-line loads. (See Figure 38, Swivels.)

> *Note: Swivels are positioning hardware, and are not intended to be rotated under load.*

(b) Swivels must be of the proper shape and size to make sure it seats correctly in the hook or lifting device.

(c) You must keep all swivel components in good working condition.

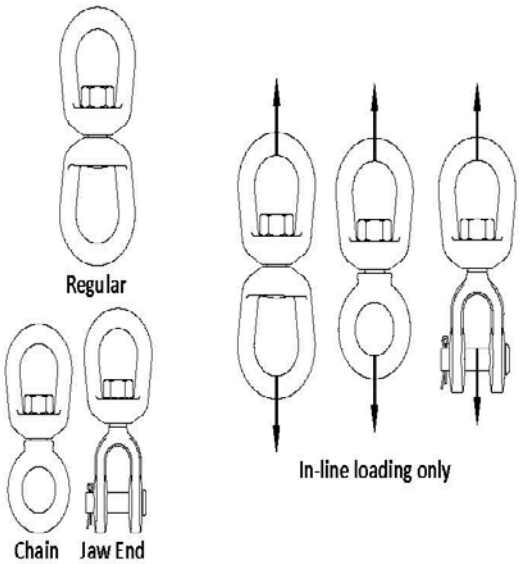

Figure 38-Swivels.

[Statutory Authority: RCW 49.17.010, .040, .050, and .060. 16-09-085 (Order 15-08), § 296-155-56120, filed 04/19/16, effective, 05/20/16. Statutory Authority: RCWs 47.17.010, 49.17.040, 49.17.050, 49.17.440 and 49.17.060. 12-01-086 (Order 08-32), § 296-155-56120, filed 12/20/11, effective 02/01/12.]

WAC 296-155-56125 Rigging blocks.

(1) The rigging block components must be fully engaged, with all fasteners and retaining devices in place and in good working order before use.

(2) The rope must be in the sheave groove when the rigging block begins to take load.

(3) The load line multiplied by the block load factor must not exceed the rated load of the rigging block. (See Figure 39, Block Load Factor Multipliers.)

(4) Load line fittings must not contact the rigging block sheave(s).

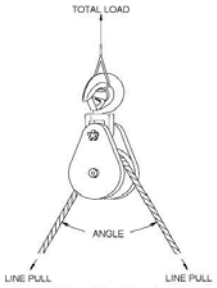

Tackle Block Angles

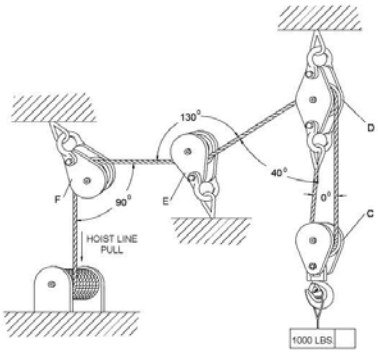

Utility Block Angles

Angle	Factor	Angle	Factor
0°	2.00	100°	1.29
10°	1.99	110°	1.15
20°	1.97	120°	1.00
30°	1.93	130°	.84
40°	1.87	135°	.76
45°	1.84	140°	.68
50°	1.81	150°	.52
60°	1.73	160°	.35
70°	1.64	170°	.17
80°	1.53	180°	.00
90°	1.41	—	—

Block Load = Line Pull X Multiplier Factor

Example: Load = 1,000 lb
Line Pull: 1,000 lb ÷ 2 = 500 lb
Load Block "C" = 500 lb X 2 = 1,000 lb
(line pull X factor for 0 deg angle)
Load Block "D" = 500 lb X 1.87 + 500 lb = 1,435 lb
(line pull X factor for 40 deg angle + dead-end load
Load Block "E" = 500 lb X 0.84 = 420 lb
(line pull X factor for 130 deg angle)
Load Block "F" = 500 lb X 1.41 = 705 lb
(line pull X factor for 90 deg angle)

Figure 39-Block Load Factor Multipliers.

[Statutory Authority: RCW 49.17.010, .040, .050, and .060. 16-09-085 (Order 15-08), § 296-155-56125, filed 04/19/16, effective, 05/20/16. Statutory Authority: RCWs 47.17.010, 49.17.040, 49.17.050, 49.17.440 and 49.17.060. 12-01-086 (Order 08-32), § 296-155-56125, filed 12/20/11, effective 02/01/12.]

WAC 296-155-562 Lifting devices other than slings and rigging hardware.

[Statutory Authority: RCWs 47.17.010, 49.17.040, 49.17.050, 49.17.440 and 49.17.060. 12-01-086 (Order 08-32), § 296-155-562, filed 12/20/11, effective 02/01/12.]

WAC 296-155-56200 Structural and mechanical lifters.

(1) Structural and mechanical lifting devices must be constructed in accordance with ASME B30.20-2010, Below-the-Hook Lifting Devices.

(2) You must legibly mark the rated load of the lifting device on the main structure or on a tag attached to it where it is visible. If the lifting device is made up of several lifters, each detachable from the group, these lifters must also be marked with their individual rated loads.

(3) All structural and mechanical lifting devices must be marked with the following information:

(a) Manufacturer's name and address;

(b) Serial number;

(c) Lifter weight, if over 100 pounds (45 kg);

(d) Rated load as required in subsection (2) of this section;

(e) Name and address of repairer or modifier, when the lifting device has been repaired or modified.

(4) Installation.

(a) You must assemble and install structural and mechanical lifters according to manufacturer's instructions.

(b) The installer must check for correct rotation of all motors.

(5) Inspection.

(a) A qualified person must inspect all new, altered, repaired, or modified lifting devices according to Tables 30 and 31. The inspection of altered, repaired or modified lifting devices can be limited to the parts affected, if a qualified person determines that is all that is needed.

(b) The operator must inspect the lifting device before and during every lift for any indication of damage. Check the following items:

(i) Surface of the load for debris;

(ii) Condition and operation of the controls; and

(iii) Condition and operation of the indicators and meters when installed.

(c) Lifting devices must be inspected, by the operator or another competent person, according to Table 30.

(i) If any damage is found, have a qualified person determine whether there is a hazard.

(ii) You must correct hazardous conditions before continuing use.

Table 30 Structural and Mechanical Lifter Frequent Inspection	
Inspect for*:*	**How often:**
Structural members for: • Deformation. • Cracks. • Excessive wear on any part of the lifter.	• Normal service – monthly. • Heavy service – weekly to monthly. • Severe service – daily to weekly. • Special or infrequent service – as recommended by a qualified person before and after each occurrence. • Before use, when any lifter has been idle for at least one month.
The device for: • Loose or missing: - Guards. - Fasteners. - Covers. - Stops. - Nameplates.	
• All functional operating mechanisms for maladjustments interfering with operation.	
• Automatic hold-and-release mechanisms for maladjustments interfering with operation.	

Note:

- *Normal service means service that involves operation with various weights within the rated load limit, averaging less than 65% of rated load limits.*
- *Heavy service means service that involves operation within the rated load limit, that exceeds the limits of normal service.*
- *Severe service means service that involves normal or heavy service with abnormal operating conditions.*

(d) A qualified person must perform a periodic inspection on structural and mechanical lifters according to Table 31. Include the items in Table 30 of this section.

(i) You must correct hazardous conditions before continuing use.

(ii) You must keep dated inspection reports of the most recent periodic inspection.

Table 31 Structural and Mechanical Lifting Device Periodic Inspection	
Inspect for:	**How often:**
• Loose bolts or fasteners.	• Normal service for equipment in place – yearly. • Heavy service semiannually. • Severe service – quarterly. • Special or infrequent service – as recommended by a qualified person before the first such occurrence and as directed by the qualified person for any subsequent occurrences.
• Cracked or worn gear, pulleys, sheaves, sprockets, bearings, chains, and belts.	
• Excessive wear of friction pads, linkages, and other mechanical parts.	
• Excessive wear at hoist hooking points and load support clevises or pins.	

Note:

- *Normal service means service that involves operation with various weights within the rated load limit, averaging less than 65% of rated load limits.*
- *Heavy service means service that involves operation within the rated load limit, that exceeds the limits of normal service.*
- *Severe service means service that involves normal or heavy service with abnormal operating conditions.*

(6) Operational tests.

(a) A qualified person must perform an operational test on new, altered, repaired, or modified lifters before use. The qualified person can limit the testing of altered, repaired or modified lifters to the parts affected.

(b) You must test the following items:

(i) You must test lifters with moving parts to determine that the lifter operates according to the manufacturer's instructions.

(ii) You must test lifters with manually operated or automatic latches to determine that the latch operates according to manufacturer's instructions.

(iii) You must test all indicator lights, gages, horns, bells, alarms, pointers, and other warning devices must be tested.

(c) You must keep dated reports of all operational tests on file.

(7) Repair.

(a) You must repair structural and mechanical lifting devices as follows:

(i) Adjustments and testing must be done only by a qualified person;

(ii) Replacement parts used must be at least equal to the original manufacturer's specifications;

(iii) You must inspect the device according to subsection (5) of this section before returning to service.

(b) You must take the following precautions before repairs on a lifting device are started:

(i) Disconnect, lock out and tag all sources of power "Out of Service," if applicable;

(ii) Tag the lifting device removed from service for repair "Out of Service."

(8) Lifting devices must be operated only by qualified personnel.

(9) Operators must do the following:

(a) Test all controls before use, each shift;

(b) Consult a competent person before handling the load whenever there is any doubt as to safety;

(c) Respond only to instructions from competent persons, except for stop signals. The operator must obey a stop order at all times, no matter who gives it;

(d) Do not load the lifting device in excess of its rated load or with any load that it is not specifically designed for;

(e) Apply the lifter to the load according to the instruction manual;

(f) Check that:

(i) Lifter ropes or chains are not kinked.

(ii) Multiple part lines are not twisted around each other.

(g) Bring the lifter over the load in a way that minimizes swinging;

(h) Keep the load or lifter from contacting any obstruction;

(i) Set down any attached load and store the lifting device before leaving it;

(j) Check that all personnel are clear of the load;

(k) Using the lifter for side pulls or sliding the load is prohibited, unless specifically authorized by a qualified person;

(l) Riding on loads or the lifting device is prohibited.

[Statutory Authority: RCW 49.17.010, .040, .050, and .060. 16-09-085 (Order 15-08), § 296-155-56200 filed 04/19/16, effective, 05/20/16. Statutory Authority: RCWs 47.17.010, 49.17.040, 49.17.050, 49.17.440 and 49.17.060. 12-01-086 (Order 08-32), § 296-155-56200, filed 12/20/11, effective 02/01/12.]

WAC 296-155-56205 Vacuum lifters.

(1) Vacuum lifting devices must be constructed in accordance with ASME B30.20-2010, Below-the-Hook Lifting Devices.

(2) Rated load.

(a) The rated load of each lifter and each pad must be legibly marked on the main structure or on a tag attached to it where it is visible. The marking must refer to the instruction manual for information about decreases in rating due to loads:

(i) Rigidity;

(ii) Strength;

(iii) Overhang;

(iv) Surface condition;

(v) Angle of load;

(vi) Temperature;

(vii) Number of pads;

(viii) Elevation and vacuum level.

(b) If the vacuum lifting device has shut-off valves on individual pads or groups of pads, the rated load of each pad must also be marked.

(3) The vacuum lifter must be clearly marked on the main structure with all of the following:

(a) Manufacturer's name and address;

(b) Model number;

(c) Serial number;

(d) Lifter weight;

(e) Electrical power requirements, if applicable;

(f) Pressure and volume of compressed air required, if applicable;

(g) Rated load, as required in subsection (2) of this section;

(h) If repaired or modified, the name, address, and lifter identification of repairer or modifier.

(4) Installation.

(a) You must assemble and install vacuum lifters according to manufacturer's instructions.

(b) The installer must check:

(i) That the power supply is the same as what is shown on the nameplate.

(ii) For correct rotation of all motors.

(c) Connect the electrical power supply to the vacuum lifter to either:

(i) The line side of the crane disconnect; or

(ii) An independent circuit.

(5) Inspection.

(a) A qualified person must inspect all new, altered, repaired, or modified vacuum lifters. A qualified person can limit the inspection of altered, repaired or modified lifters to the affected parts.

(b) The operator must inspect the lifter before and during every lift for any indication of damage, including all of the following:

(i) Surface of the load for debris;

(ii) Seal of the vacuum pad for debris;

(iii) Condition and operation of the controls;

(iv) Condition and operation of the indicators, meters and pumps when installed.

(c) Lifters must be inspected, by the operator or another competent person, according to Table 32.

(d) A qualified person must determine whether signs of damage indicate a hazard.

(e) You must correct hazardous conditions before continuing use.

(f) A qualified person must perform a periodic inspection of vacuum lifters according to Table 33. Include the items in Table 32 of this section.

(g) You must keep dated inspection records on all critical items such as supporting structure, motors, controls, and other auxiliary components.

(h) You must correct hazardous conditions before continuing use.

Table 32 Vacuum Lifter Frequent Inspection	
Inspect for:	**How often:**
Structural members for: • Deformation. • Cracks. • Excessive wear.	• Normal service – monthly. • Heavy service – weekly to monthly. • Severe service – daily to weekly. • Special or infrequent service – as recommended by a qualified person before and after each occurrence. • Before using, when a lifting device has been idle for more than one month.
The vacuum generator for output.	
The vacuum pad seal rings for: • Cuts. • Tears. • Excessive wear. • Foreign particles.	
Vacuum lines and connections for: • Leakage. • Cuts. • Kinks. • Collapsed areas of hoses.	
The vacuum reservoir for: • Leaks. • Visible damage.	
The entire vacuum system including indicator lights, gages, horns, bells, pointers or other warning devices, and vacuum level indicators: • Attach a nonporous, clean surface to the vacuum pad or pads. • Stop the vacuum source. • Check that the vacuum level in the system does not decrease by more than the manufacturer's specified rate.	

Table 33 Vacuum Lifting Device Periodic Inspection	
Inspect for:	**How often:**
External evidence of: • Looseness. • Wear. • Deformation. • Cracking. • Corrosion.	• Normal service for equipment in place – yearly. • Heavy service – semiannually. • Severe service – quarterly. • Special or infrequent service – as recommended by a qualified person before the first such occurrence and as directed by the qualified person for any subsequent occurrences.
External evidence of damage to: • Supporting structure. • Motors. • Controls. • Other auxiliary components.	
Clear warning labels.	

Note:

- *Normal service means service that involves operation with various weights within the rated load limit, averaging less than 65% of rated load limits.*
- *Heavy service means service that involves operation within the rated load limit, that exceeds the limits of normal service.*
- *Severe service means service that involves normal or heavy service with abnormal operating conditions.*

(6) Operational tests.

(a) A qualified person must perform an operational test on new, altered, repaired, or modified vacuum lifters before use. The qualified person can limit the testing of altered, repaired or modified lifters to the parts affected.

(b) You must test the following items:

(i) Moving parts.

(ii) Latches.

(iii) Stops;

(iv) Limit switches.

(v) Control devices.

(i) Vacuum lines.

(vii) You must test the seals and connections for leaks by attaching a smooth nonporous clean material to the vacuum pad or pads and then stopping the vacuum source. The vacuum level in the system must not decrease more than the manufacturer's specified rate.

(c) You must keep dated reports of all operations tests on file.

(7) Load tests.

(a) Prior to initial use, all new, altered, repaired, or modified vacuum lifting devices must be load tested and inspected by a qualified person. The qualified person can limit the test to the areas affected by the alteration, repair or modification.

(b) Test loads must not be more than 125% of the rated load of the system, unless otherwise recommended by the manufacturer or a qualified person.

(c) You must keep written reports confirming the load rating of the vacuum lifting device.

(d) The load test must consist of one of the following procedures:

(i) Actual load test

(A) Attach pads to the designated test load.

(B) Raise the test load a small distance to make sure the load is supported by the vacuum-lifting device.

(C) Hold the load for two minutes.

(D) Lower the load for release.

(ii) Simulated load test. Using a test fixture, apply forces to all load bearing components either individually or in assemblies equivalent to the forces encountered by the components if they were supporting a load that was 125% of the rated load.

(e) After the test, you must visually test the vacuum lifting device. You must correct any condition that constitutes a hazard before the lifting device is placed in service. If the correction affects the structure, then you must retest the lifter.

(8) Repair.

(a) Repair vacuum lifting devices as follows:

(i) Adjustments and testing must be done only by a qualified person.

(ii) Use replacement parts that are at least equal to the original manufacturer's specifications.

(iii) You must inspect the lifting device before returning to service as required in subsection (5) of this section.

(b) Take the following precautions before repairs on a lifting device are started:

(i) Move the vacuum-lifting device to an area where it will cause the least interference with other operations.

(ii) Disconnect, lock out and tag all sources of power “Out of Service”, if applicable.

(iii) Tag the lifting device removed from service for repair “Out of Service”

(9) Lifting devices must be operated only by qualified personnel.

(10) Operators must do the following:

(a) Test all controls before use during a shift.

(b) Consult a competent person before handling the load whenever safety is in doubt

(c) Respond only to instructions from competent persons, except for stop orders. The operator must obey a stop order at all times, no matter who gives it.

(d) Do not load the lifter in excess of its rated load or with any load that it is not specifically designed for.

(e) Apply the lifter to the load according to the manufacturer’s instructions.

(f) Check that:

(i) Ropes or chains are not kinked.

(ii) Multiple part lines are not twisted around each other.

(iii) The pad contact surface is clean and free of loose particles.

(g) Check that vacuum lines are not:

(i) Kinked or twisted.

(ii) Wrapped around or looped over parts of the lifting device that will move during the lift.

(h) Bring the lifter over the load in a way that minimizes swinging.

(i) Lift the load a few inches to make sure that the lifting device was correctly applied.

(j) Keep the load or lifter from contacting any obstruction.

(k) Do the following if power goes off while making a lift:

(i) Warn all people in the area;

(ii) Set the load down if possible.

(l) Set down any attached load and store the lifting device before leaving it.

(m) Check that all personnel are clear of the load.

(n) Using the lifter for side pulls or sliding the load is prohibited, unless specifically authorized by a qualified person.

(o) Riding on the load or the lifter is prohibited.

[Statutory Authority: RCW 49.17.010, .040, .050, and .060. 16-09-085 (Order 15-08), § 296-155-56205, filed 04/19/16, effective, 05/20/16. Statutory Authority: RCWs 47.17.010, 49.17.040, 49.17.050, 49.17.440 and 49.17.060. 12-01-086 (Order 08-32), § 296-155-56205, filed 12/20/11, effective 02/01/12.]

WAC 296-155-56210 Close proximity lifting magnets.

(1) Close proximity lifting magnets must be constructed in accordance with ASME B30.20-2010, Below-the-Hook Lifting Devices.

(2) Rated load.

(a) General application magnets must have the rated load (capacity) marked either on the lifting magnet or on a tag attached to it. The marking must refer to the instruction manual for information about decreases in rating due to the loads.

(i) Surface condition.

(ii) Thickness.

(iii) Percentage of contact with the magnet.

(iv) Temperature.

(ii) Metallurgical composition.

(vi) Deflection.

(b) Specified application magnets must have the rated load (capacity) either on the lifting magnet or on a tag attached to it, referring to the specific loads for which the capacity applies.

(3) Identification. All close proximity lifting magnets must be marked with the following information:

(a) Manufacturer's name and address;

(b) Model and lifting magnet unit identification;

(c) Weight of lifting magnet;

(d) Rated load, as required in subsection (2) of this section;

(e) Duty cycle, if applicable;

(f) Cold current (amps) at 68 degrees Fahrenheit (20 degrees Celsius), if applicable; and

(g) Voltage of primary power supply or battery, if applicable.

(h) If repaired or modified, name and address of repairer or modifier and (a) through (g) of this subsection if changed.

(4) You must install lifting magnets according to manufacturer's instructions.

(5) Inspection.

(a) A qualified person must inspect all new, altered, repaired, or modified lifting magnets according to Tables 34 and 35. The inspection of altered, repaired or modified lifting magnets can be limited to the parts affected, if a qualified person determines that is all that is needed.

(b) The operator must inspect the lifting magnet before and during every lift for any indication of damage. Check all of the following items:

(i) Lifting magnet face and surface of the load for foreign materials and smoothness;

(ii) Condition and operation of the:

(A) Control handle of a manually controlled permanent magnet;

(B) Indicators and meters when installed.

(c) Lifting magnets must be inspected, by the operator or another competent person, according to Table 34.

(d) A qualified person must determine whether signs of damage indicate a hazard.

(e) You must correct hazardous conditions before continuing use.

Table 34 Close Proximity Lifting Magnet Frequent Inspection	
Inspect for:	**How often:**
Structural and suspension members for: • Deformation. • Cracks. • Excessive wear on any part of the lifting magnet.	• Normal service – monthly • Heavy service – weekly to monthly • Severe service – daily to weekly • Special or infrequent service – as recommended by a qualified person before and after each occurrence • Before using, when a lifting magnet has been idle for more than one month.
The lifting magnet face for: • Foreign materials. • Smoothness.	
Condition of lifting bail or sling suspension.	
Condition and operation of control handle.	
Condition and operation of indicators and meters, if applicable.	
Electrical conductors, if applicable, that are visible without disassembly for: • Loose connections. • Continuity. • Corrosion. • Damage to insulation.	
Battery operated electromagnets for: • Proper level of battery electrolyte. • Corrosion of battery posts or connectors.	
Cracked housings, welds, and loose bolts.	
Legible labels and marking.	

Note:

- *Normal service means service that involves operation with various weights within the rated load limit, averaging less than 65% of rated load limits.*
- *Heavy service means service that involves operation within the rated load limit, that exceeds the limits of normal service.*
- *Severe service means service that involves normal or heavy service with abnormal operating conditions.*

(f) A qualified person must perform periodic inspections of close proximity lifting magnets according to Table 35. Include the items in Table 34 of this section.

(g) You must keep dated inspection records on all critical items such as structural and suspension members, lifting magnet face, lifting bail, control handle, indicators and meters.

(h) You must correct hazardous conditions before continuing use.

Table 35 Close Proximity Lifting Magnet Periodic Inspection	
Inspect for:	**How often:**
Members, fasteners, locks, switches, warning labels, and lifting parts for: • Deformation. • Wear. • Corrosion.	• Normal service for equipment in place – yearly • Heavy service, unless external conditions indicate that disassembly should be done to permit detailed inspection – quarterly • Severe service–monthly • Special or infrequent service – as recommended by a qualified person before the first occurrence and as directed by the qualified person for any subsequent occurrences.
All electrical components, including controllers, battery, external power supply, power disconnects, meters, indicators, and alarms for: • Proper operation. • Condition.	
Lifting magnet coil must be tested for: • Ohmic and ground readings compared to manufacturer's standards.	

Note:

- *Normal service means service that involves operation with various weights within the rated load limit, averaging less than 65% of rated load limits.*
- *Heavy service means service that involves operation within the rated load limit, that exceeds the limits of normal service.*
- *Severe service means service that involves normal or heavy service with abnormal operating conditions.*

(6) Operational tests.

(a) All new, altered, repaired or modified lifting magnets must be tested either by or under the direction of a qualified person before use. The qualified person can limit the testing of altered, repaired or modified lifting magnets to the parts affected.

(b) The following items must be tested:

(i) Moving parts;

(ii) Latches;

(iii) Stops;

(iv) Switches;

(v) Control devices;

(vi) Alarms; and

(vii) Warning devices, including:

(A) Indicator lights;

(B) Gauges;

(C) Horns;

(D) Bells; and

(E) Pointers.

(c) You must keep dated reports of all operational tests on file.

(7) Load tests.

(a) Prior to initial use, you must load test all new, altered, repaired, or modified close proximity lifting devices and inspected by a qualified person. The qualified person can limit the test to the areas affected by the alteration, repair, or modification.

(b) You must test the breakaway force of lifting magnets according to manufacturer's directions or ANSI B30.20-2010.

(8) Repair.

(a) You must repair close proximity lifting magnets as follows:

(i) Adjustments and testing must be done by or under the direction of a qualified person;

(ii) Replacement parts used must be at least equal to the original manufacturer's specifications;

(iii) You must inspect the magnet before returning to service as required in subsection (5) of this section.

(b) You must take the following precautions before repairs on a magnet are started:

(i) Disconnect, lock out and tag all sources of power “Out of Service,” if applicable; and

(ii) Tag any lifting magnet removed from service for repair “Out of Service.”

(9) Lifting magnets must be operated only by qualified personnel.

(10) Operators must do the following:

(a) Test all controls before use, each shift;

(b) Check all meters and indicators for proper operation before making a lift;

(c) Consult a competent person before handling the load whenever there is any doubt as to safety;

(d) Respond only to instructions from competent persons, except for stop orders. Operators must obey a stop order at all times, no matter who gives it;

(e) Do not load the lifting magnet in excess of its rated load or with any load that it is not specifically designed for;

(f) Apply the magnet to the load according to the instruction manual;

(g) Check that:

(i) Lifter ropes or chains are not kinked;

(ii) Multiple part lines are not twisted around each other;

(iii) The lifting magnet face and the contact area on the load are clean.

(h) Bring the magnet over the load in a way that minimizes swinging;

(i) Lift the load a few inches to make sure that the lifting magnet has been correctly applied;

(j) Keep the load or lifting magnet from contact with any obstruction;

(k) Set down any attached load and store the lifting magnet before leaving it;

(l) Check that all people near the lift are warned before lifting;

(m) Using the lifter for side pulls or sliding the load is prohibited, unless specifically authorized by a qualified person; and

(n) Riding on loads or the lifting magnet is prohibited.

[Statutory Authority: RCW 49.17.010, .040, .050, and .060. 16-09-085 (Order 15-08), § 296-155-56210, filed 04/19/16, effective, 05/20/16. Statutory Authority: RCWs 47.17.010, 49.17.040, 49.17.050, 49.17.440 and 49.17.060. 12-01-086 (Order 08-32), § 296-155-56210, filed 12/20/11, effective 02/01/12.]

WAC 296-155-56215 Remotely operated lifting magnets.

(1) Remotely operated lifting magnets must be constructed in accordance with ASME B30.20-2010, Below-the-Hook Lifting Devices.

(2) **Identification**. All remotely operated lifting magnets must be marked with the following information:

(a) Manufacturer's name and address;

(b) Model or unit identification;

(c) Weight of lifting magnet;

(d) Duty cycle;

(e) Cold current;

(f) Voltage;

(g) If repaired or modified, name and address of repairer or modifier and (a) through (g) of this subsection if changed.

(3) You must install lifting magnets according to manufacturer's instructions.

(4) Inspections.

(a) A qualified person must inspect all new, altered, repaired or modified lifting magnets according to Tables 36 and 37. A qualified person can limit the inspection of altered, repaired or modified lifting magnets to the parts affected.

(b) Lifting magnets must be inspected, by the operator or another competent person, according to Table 36.

(c) A qualified person must determine whether signs of damage indicate a hazard.

(d) You must correct hazardous conditions before continuing use.

(e) A qualified person must perform periodic inspections of remotely operated lifting magnets according to Table 37. Include the items in Table 36.

(f) Make records of apparent external conditions to provide the basis for a continuing evaluation.

(g) You must correct hazardous conditions before continuing use.

Table 36 Remotely Operated Lifting Magnet Frequent Inspection

Inspect for:	How often:
Structural and suspension members for • Deformation. • Cracks. • Excessive wear on any part of the lifting magnet.	• Normal service – monthly. • Heavy service – weekly to monthly. • Severe service – daily to weekly. • Special or infrequent service – as recommended by a qualified person before and after each occurrence. • Before using, when a lifting magnet has been idle for more than one month.
The lifting magnet face for • Foreign materials. • Smoothness.	
Electrical conductors that are visible without disassembly.	
Cracked housings, welds, and loose bolts.	

Note:
- *Normal service means service that involves operation with various weights within the rated load limit, averaging less than 65% of rated load limits.*
- *Heavy service means service that involves operation within the rated load limit, that exceeds the limits of normal service.*
- *Severe service means service that involves normal or heavy service with abnormal operating conditions.*

Table 37 Remotely Operated Lifting Magnet Periodic Inspection	
Inspect for:	**How often:**
Members, fasteners, and lifting parts for: • Deformation. • Wear. • Corrosion.	• Normal service for equipment in place – yearly. • Heavy service– quarterly. • Severe service–monthly. • Special or infrequent service – as recommended by a qualified person before the first occurrence and as directed by the qualified person for any subsequent occurrences.
All electrical components for: • Proper operation. • Condition.	
Magnet coil, for: • Ohmic and ground readings compared to manufacturer's standards.	

(5) Operational tests.

(a) All new, altered, repaired or modified lifting magnets must be tested either by or under the direction of a qualified person before use. The qualified person can limit the testing of altered, repaired or modified lifting magnets to the parts affected.

(b) You must test the following items:

(i) All electrical equipment for proper operation;

(ii) Warning devices, including:

(A) Indicator lights;

(B) Gauges;

(C) Horns;

(D) Bells; and

(E) Pointers.

(c) You must keep dated reports of all operational tests on file.

(6) Repair.

(a) You must repair remotely operated lifting magnets as follows:

(i) Have adjustments and testing done only by or under the direction of a qualified person;

(ii) Use replacement parts that are at least equal to the original manufacturer's specifications; and

(iii) Inspect the lifter according to subsection (4) of this section, before returning to service.

(b) You must take the following precautions before repairs on a lifter are started:

(i) Disconnect, lock out and tag all sources of power "Out of Service."

(ii) Tag any magnet removed from service for repair "Out of Service."

(7) Lifting devices must be operated only by qualified personnel.

(8) Operators must do the following:

(a) Test all controls before use during a shift;

(b) Consult a competent person before handling the load whenever there is any doubt as to safety;

(c) Respond only to instructions from competent persons, except for stop orders. Operators must obey a stop order at all times, no matter who gives it;

(d) Do not load the lifting magnet in excess of its rated load or with any load that it is not specifically designed for;

(e) Apply the lifting magnet to the load according to the instruction manual;

(f) Check that:

(i) Lifter ropes or chains are not kinked;

(ii) Multiple part lines are not twisted around each other.

(g) Bring the lifting magnet over the load in a way that minimizes swinging;

(h) Keep the load or magnet from contact with any obstruction;

(i) Set down any attached load and store the lifting magnet before leaving it;

(j) Check that all people are clear of the load;

(k) Using the lifter for side pulls or sliding the load is prohibited, unless specifically authorized by a qualified person; and

(l) Riding on loads or the lifting magnet is prohibited.

[Statutory Authority: RCW 49.17.010, .040, .050, and .060. 16-09-085 (Order 15-08), § 296-155-56215, filed 04/19/16, effective, 05/20/16. Statutory Authority: RCWs 47.17.010, 49.17.040, 49.17.050, 49.17.440 and 49.17.060. 12-01-086 (Order 08-32), § 296-155-56215, filed 12/20/11, effective 02/01/12.]

WAC 296-155-56220 Scrap and material handling grapples.

(1) Grapples must be constructed in accordance with ASME B30.20-2010, Below-the-Hook Lifting Devices.

(2) Identification. All grapples must be marked with the following information:

(a) Manufacturer's name and address;

(b) Serial number or unit identification;

(c) Grapple weight;

(d) Rated voltage, if applicable;

(e) Operating hydraulic pressure(s), if applicable;

(f) Rated capacity;

(g) If repaired or modified, name and address of repairer or modifier and (a) through (f) of this subsection if changed.

(3) Grapple installation.

(a) You must install grapples according to manufacturer's instructions.

(b) The hydraulic flows and pressures must be the same as shown in the manufacturer's instructions.

(4) Inspections.

(a) A qualified person must inspect all new, altered, repaired and modified grapples according to Table 38. A qualified person can limit the inspection of altered, repaired or modified grapples to the parts affected.

(b) Grapples must be visually inspected each shift they are used, by the operator or another competent person, according to Table 38.

(c) A qualified person must determine whether signs of damage indicate a hazard.

(d) You must correct hazardous conditions before continuing use.

Table 38 Grapple Frequent Inspection

Inspect for:	How often:
Structural members for: • Deformation. • Cracks. • Excessive wear on any part of the grapple.	• Normal service – monthly. • Heavy service – weekly to monthly. • Severe service – daily to weekly. • Special or infrequent service – as recommended by a qualified person before and after each occurrence. • Before using, when a grapple has been idle for more than one month.
Pins and bushings.	
Hydraulic lines.	
Hydraulic cylinders.	
Loose bolts.	
Electrical conductors that are visible without disassembly.	

Note:

- *Normal service means service that involves operation with various weights within the rated load limit, averaging less than 65% of rated load limits.*
- *Heavy service means service that involves operation within the rated load limit, that exceeds the limits of normal service.*
- *Severe service means service that involves normal or heavy service with abnormal operating conditions.*

(e) A qualified person must perform a periodic inspection of grapples according to Table 39. Include the items from Table 38 of this section.

(f) You must keep data inspection reports on critical items such as structural members, fasteners, lifting parts, hydraulic hoses, fittings and tubing, hydraulic motors and hydraulic cylinders.

(g) You must correct hazardous conditions before continuing use.

Table 39 Grapple Periodic Inspection	
Inspect for:	**How often:**
Members, fasteners, and lifting parts for: • Deformation. • Wear. • Corrosion.	• Normal service for equipment in place – yearly. • Heavy service, unless external conditions indicate that disassembly should be done to permit detailed inspection – quarterly. • Severe service–monthly. • Special or infrequent service – as recommended by a qualified person before the first occurrence and as directed by the qualified person for any subsequent occurrences.
Hydraulic hose, fittings, and tubing for: • Evidence of leakage at the surface of the hose or its junction with metal couplings. • Blistering or abnormal deformation of the outer covering of the hose. • Leakage at threaded or clamped joints that cannot be eliminated by normal tightening or recommended procedures. • Excessive abrasion or scrubbing on the outer surface of hoses, rigid tubes, or fittings.	
Hydraulic motors for: • Loose bolts or fasteners. • Leaks at joints between sections. • Shaft seal leaks. • Unusual noises or vibration. • Loss of operating speed. • Excessive heating of the fluid. • Loss of pressure.	
Hydraulic cylinders for: • Drifting caused by fluid leaking across the piston seals. • Rod seal leakage. • Leaks at welded joints. • Scored, nicked, or dented cylinder rods. • Dented case (barrel). • Loose or deformed rod eyes or connecting joints.	
All electrical components, including meters, indicators and alarms for: • Proper operation. • Condition.	

(5) Operational tests.

(a) All new, altered, repaired or modified grapples must be tested either by or under the direction of a qualified person before use. The qualified person can limit the testing of altered, repaired or modified grapples to the parts affected.

(b) You must test all warning devices, including:

(i) Indicator lights;

(ii) Gauges;

(iii) Horns;

(iv) Bells;

(vii) Pointers;

(vi) Other warning devices.

(c) You must keep dated reports of all operational tests.

(6) Repair.

(a) You must prepare grapples as follows:

(i) Have adjustments and testing done only by or under the direction of a qualified person;

(ii) Use replacement parts that are at least equal to the original manufacturer's specifications;

(iii) Inspect the grapple according to subsection (4) of this section, before returning to service;

(b) You must take the following precautions before repairs on a grapple are started:

(i) Disconnect, lock out and tag all sources of power "Out of Service";

(ii) Tag any grapple removed from service for repair "Out of Service".

(7) Grapples must be operated only by qualified personnel.

(8) Operators must do the following:

(a) Test all controls before use during a shift.

(b) Check all meters and indicators for proper operation before making a lift.

(c) Consult a competent person before handling the load whenever there is any doubt as to safety.

(d) Respond only to instructions from competent persons, except for stop orders. An operator must obey a stop order at all times, no matter who gives it.

(e) Do not load grapples in excess of the rated load or with any load that they are not specifically designed for.

(f) Apply the grapple to the load according to the instruction manual.

(g) Bring the grapple over the load in a way that minimizes swinging.

(h) Keep the load or grapple from contact with any obstruction.

(i) Set down any attached load and store the grapple before leaving it.

(j) Do not let anyone ride on loads or the grapple.

(k) Check that all people stay clear of the load.

[Statutory Authority: RCW 49.17.010, .040, .050, and .060. 16-09-085 (Order 15-08), § 296-155-56220, filed 04/19/16, effective, 05/20/16. Statutory Authority: RCWs 47.17.010, 49.17.040, 49.17.050, 49.17.440 and 49.17.060. 12-01-086 (Order 08-32), § 296-155-56220, filed 12/20/11, effective 02/01/12.]

WAC 296-155-564 Appendices.

[Statutory Authority: RCW 49.17.010, .004, .050, and .060. 13-02-068 (Order 12-14), § 296-155-564, filed 12/31/12, effective 02/01/13. Statutory Authority: RCWs 47.17.010, 49.17.040, 49.17.050, 49.17.440 and 49.17.060. 12-01-086 (Order 08-32), § 296-155-564, filed 12/20/11, effective 02/01/12.]

WAC 296-155-56400 Mobile Crane Hand Signal Chart.

Standard Hand Signals for Controlling Crane Operations

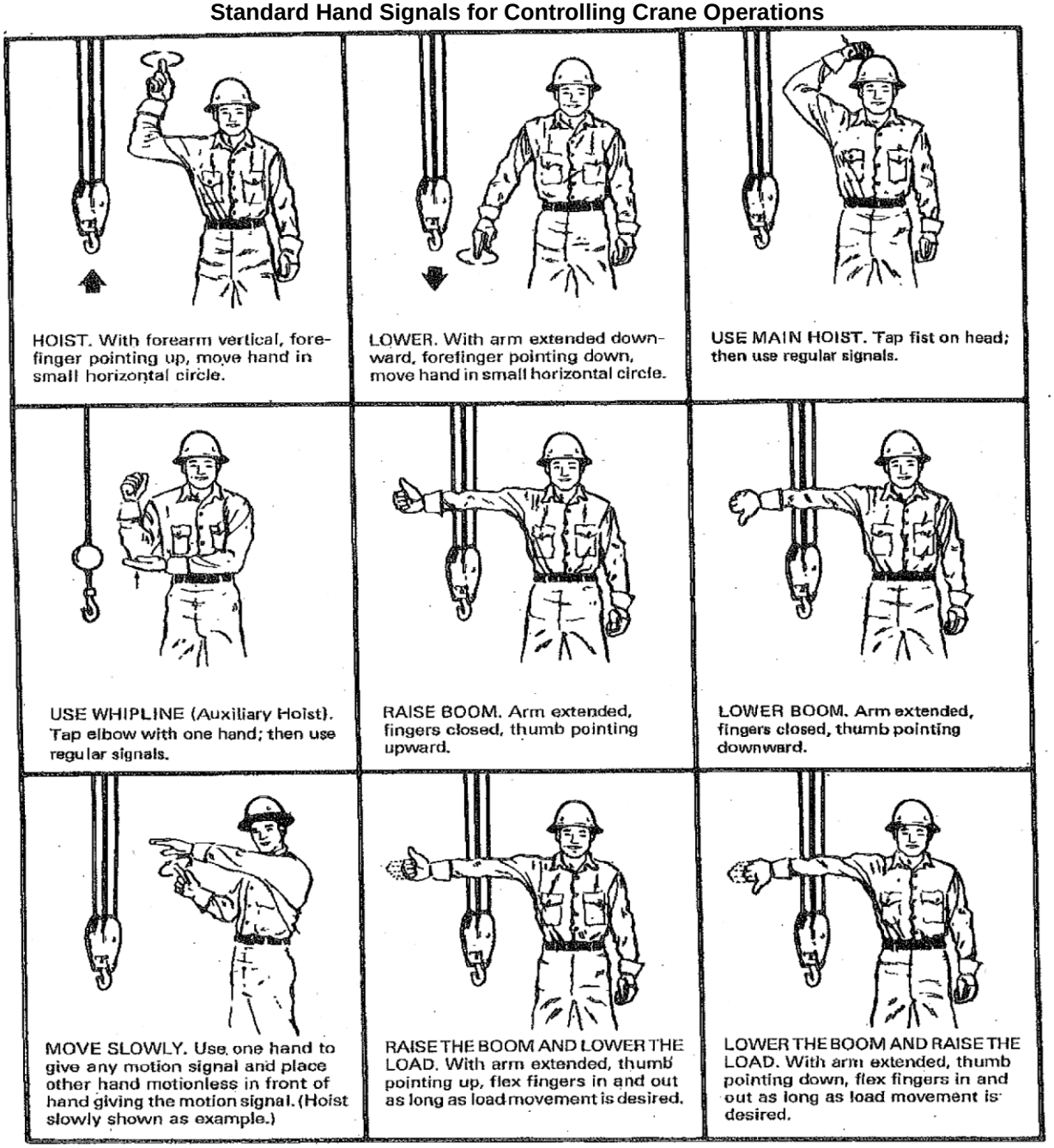

Standard Hand Signals for Controlling Crane Operations

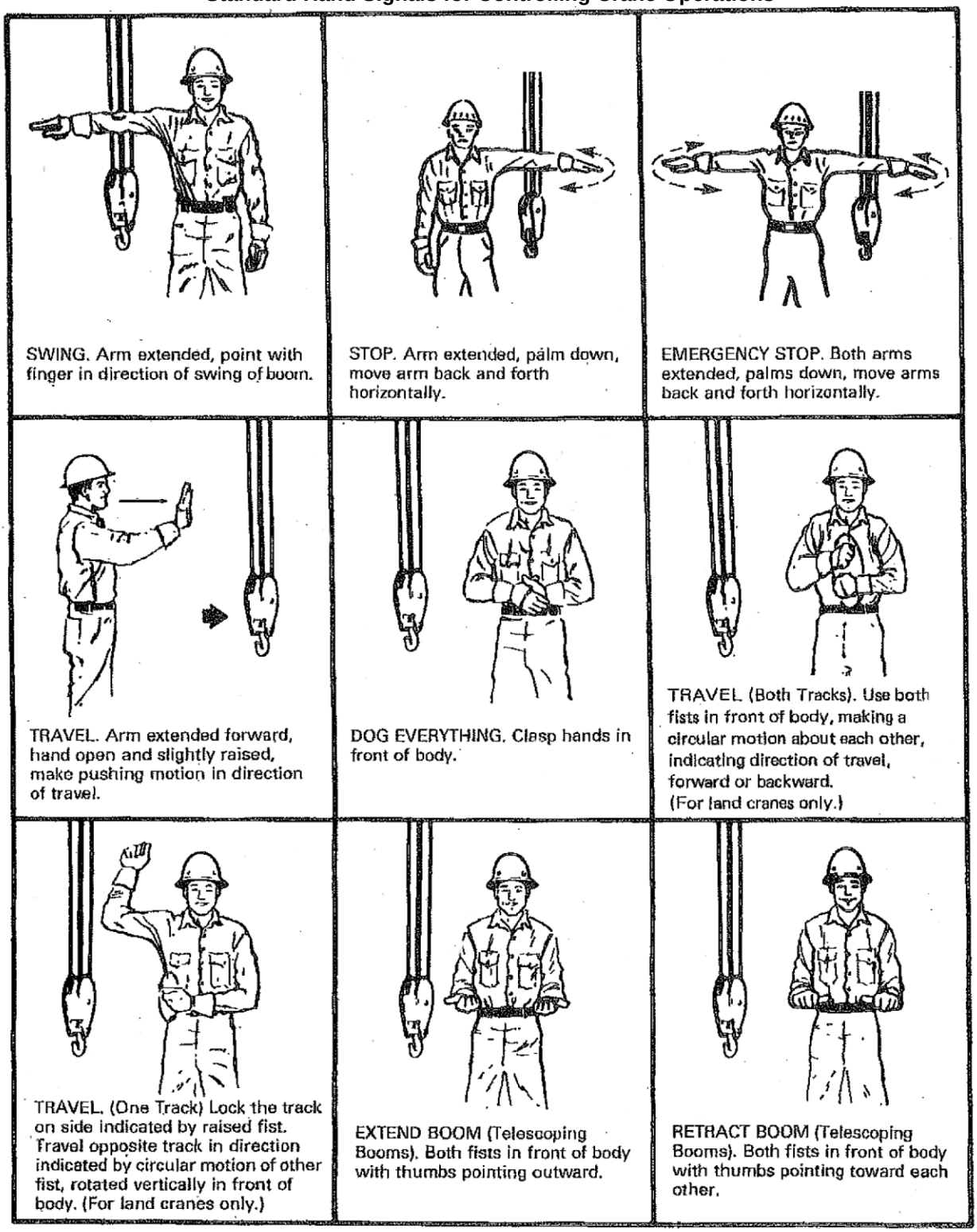

SWING. Arm extended, point with finger in direction of swing of boom.

STOP. Arm extended, palm down, move arm back and forth horizontally.

EMERGENCY STOP. Both arms extended, palms down, move arms back and forth horizontally.

TRAVEL. Arm extended forward, hand open and slightly raised, make pushing motion in direction of travel.

DOG EVERYTHING. Clasp hands in front of body.

TRAVEL (Both Tracks). Use both fists in front of body, making a circular motion about each other, indicating direction of travel, forward or backward. (For land cranes only.)

TRAVEL. (One Track) Lock the track on side indicated by raised fist. Travel opposite track in direction indicated by circular motion of other fist, rotated vertically in front of body. (For land cranes only.)

EXTEND BOOM (Telescoping Booms). Both fists in front of body with thumbs pointing outward.

RETRACT BOOM (Telescoping Booms). Both fists in front of body with thumbs pointing toward each other.

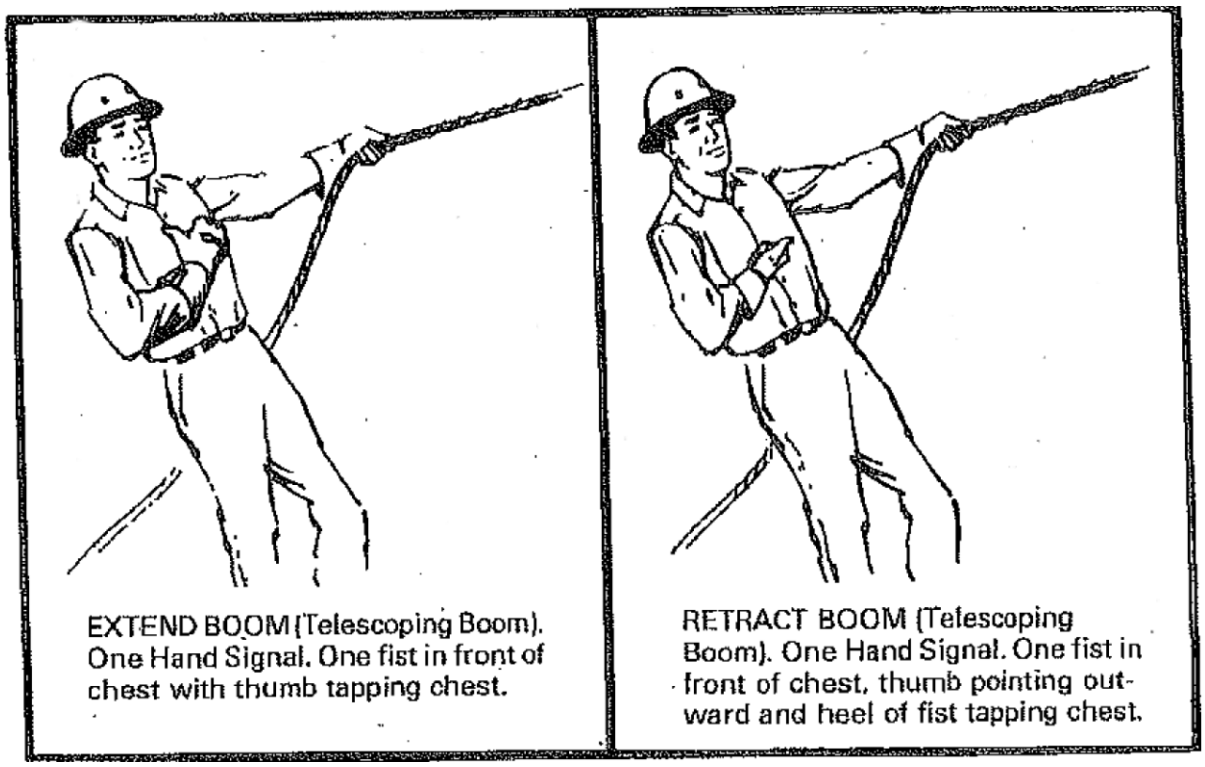

Figure 40-Standard Hand Signals for Controlling Crane Operations.

[Statutory Authority: RCW 49.17.010, .004, .050, and .060. 13-02-068 (Order 12-14), § 296-155-56400, filed 12/31/12, effective 02/01/13.

WAC 296-155-56405 Examples of types of cranes.

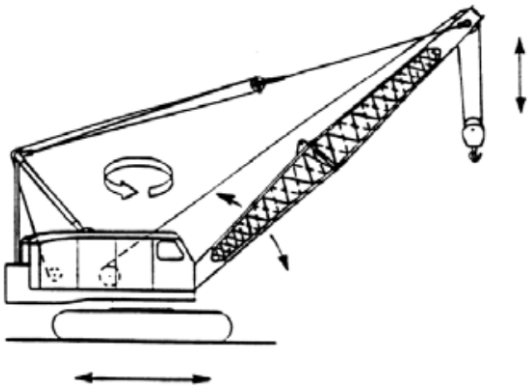

Lattice Boom Crawler Crane (LBC)

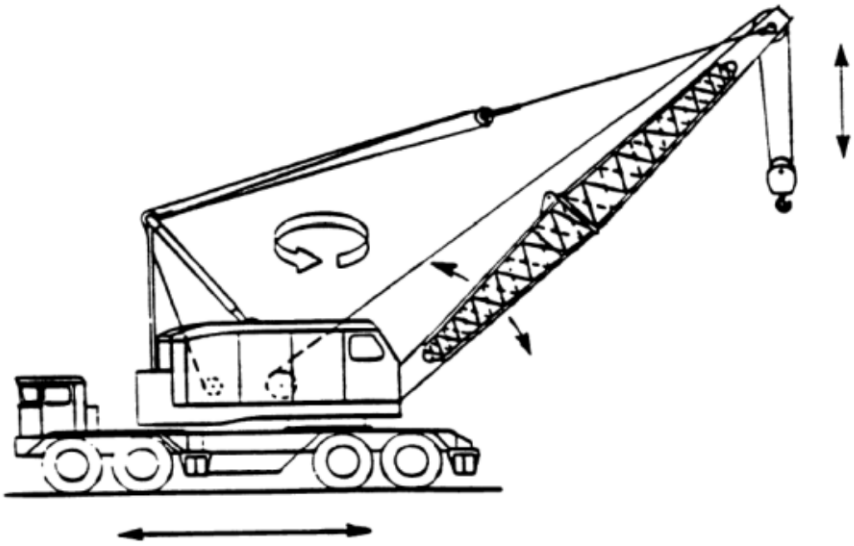

Lattice Boom Truck Crane (LBT)

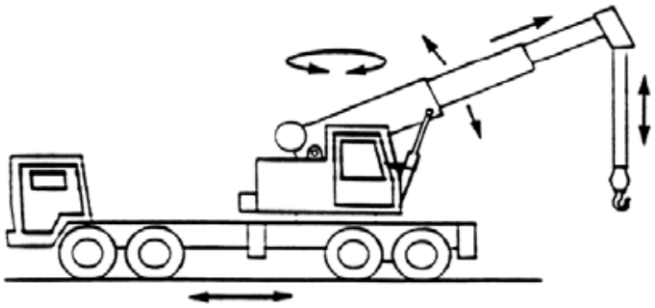

Large Telescoping Boom Crane (Swing Cab)

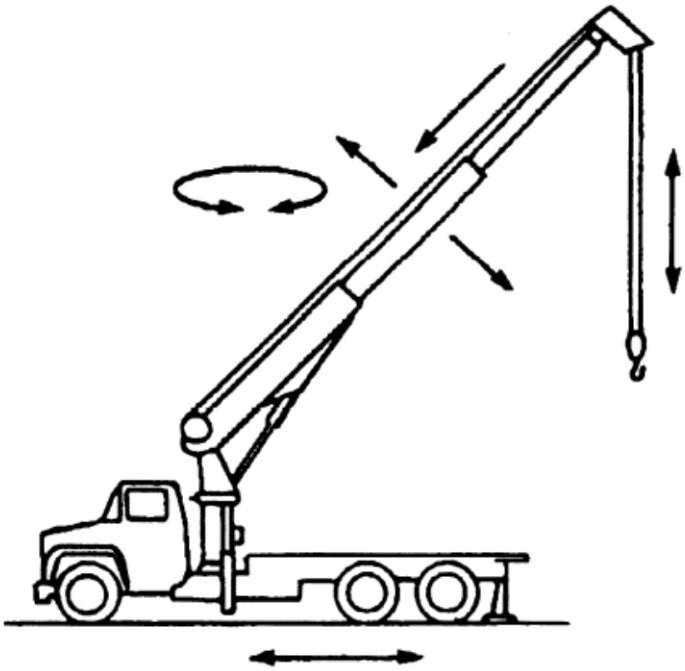

Figure 41-Small Telescoping Boom Crane (Fixed Cab) Mobile Crane Types.

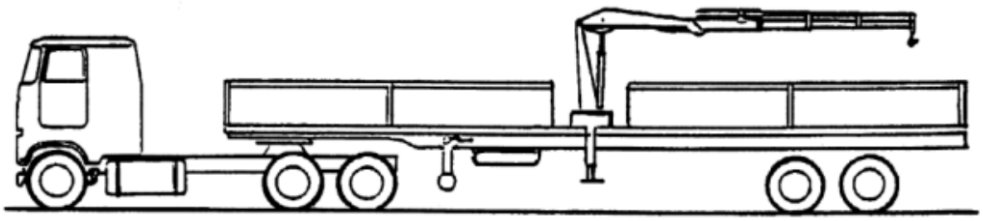

Articulating Boom Crane – Trailer Mounted

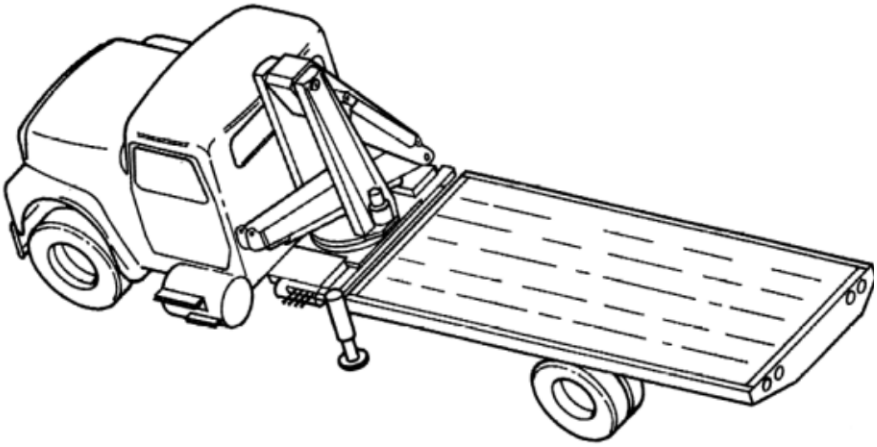

Articulating Boom Crane – Truck Mounted

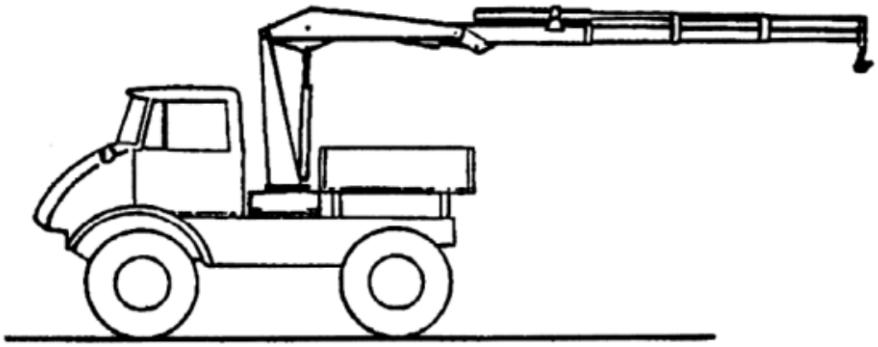

Articulating Boom Crane – Off Road Vehicle

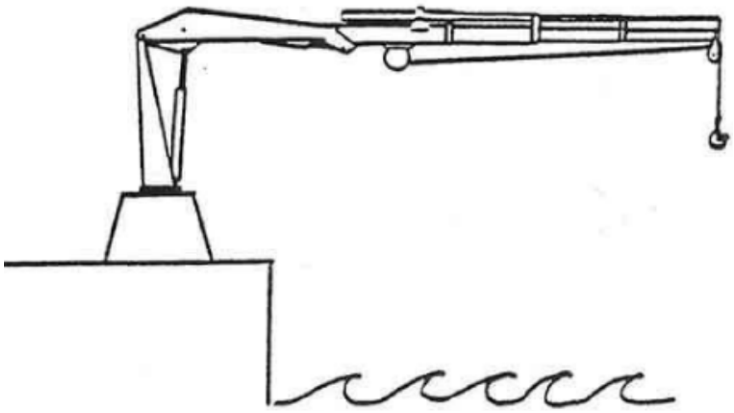

Figure 42-Articulating Crane-Stationary Installation Articulating Boom Crane.

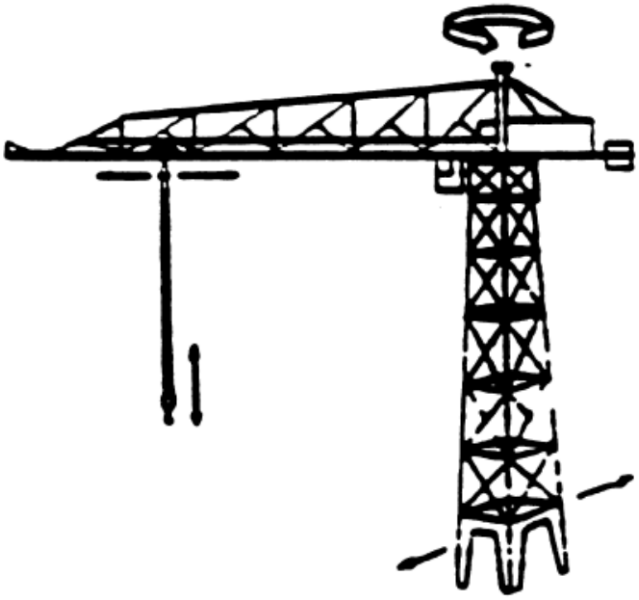

Hammerhead Tower Crane

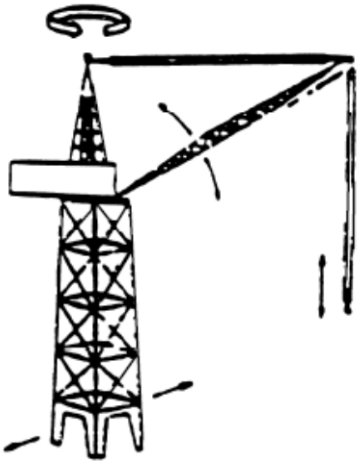

Luffing Boom Tower Crane

Figure 43-Tower Crane Types.

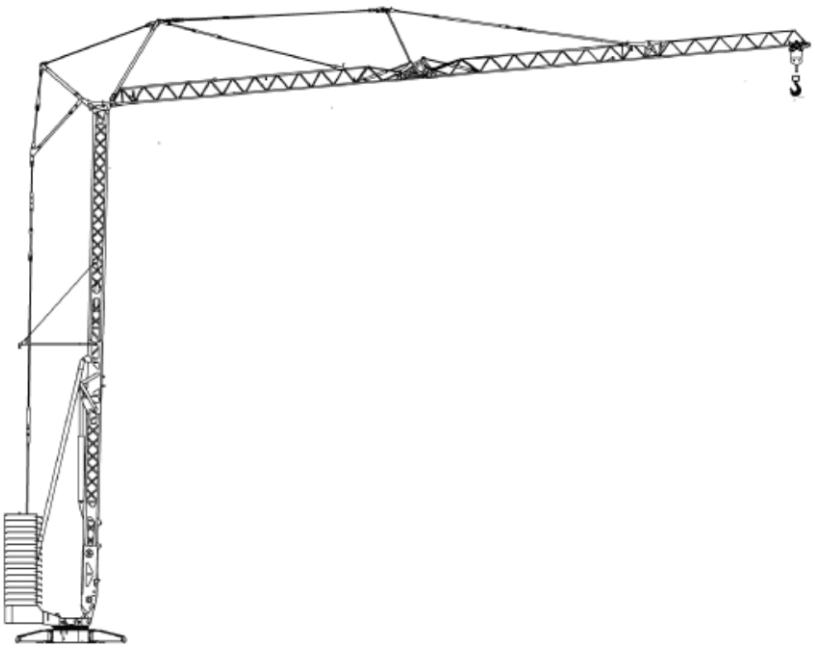

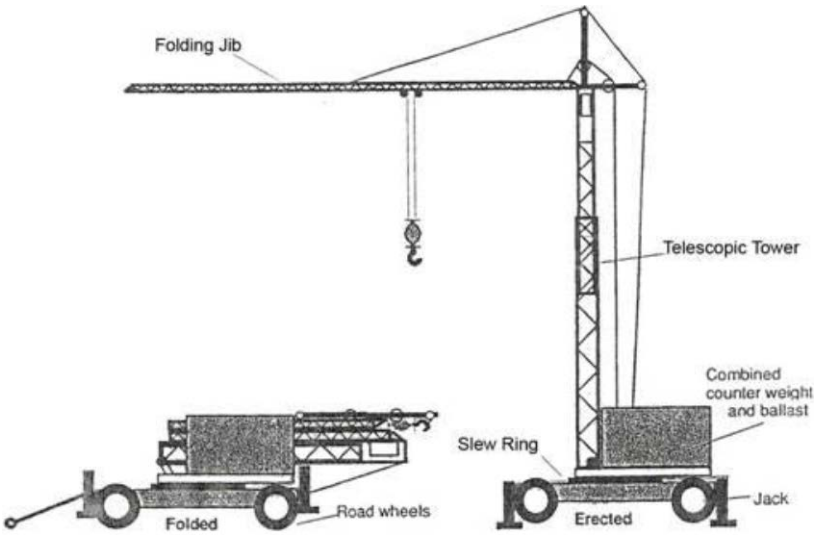
Folding Jib
Telescopic Tower
Combined counter weight and ballast
Slew Ring
Jack
Road wheels
Folded
Erected

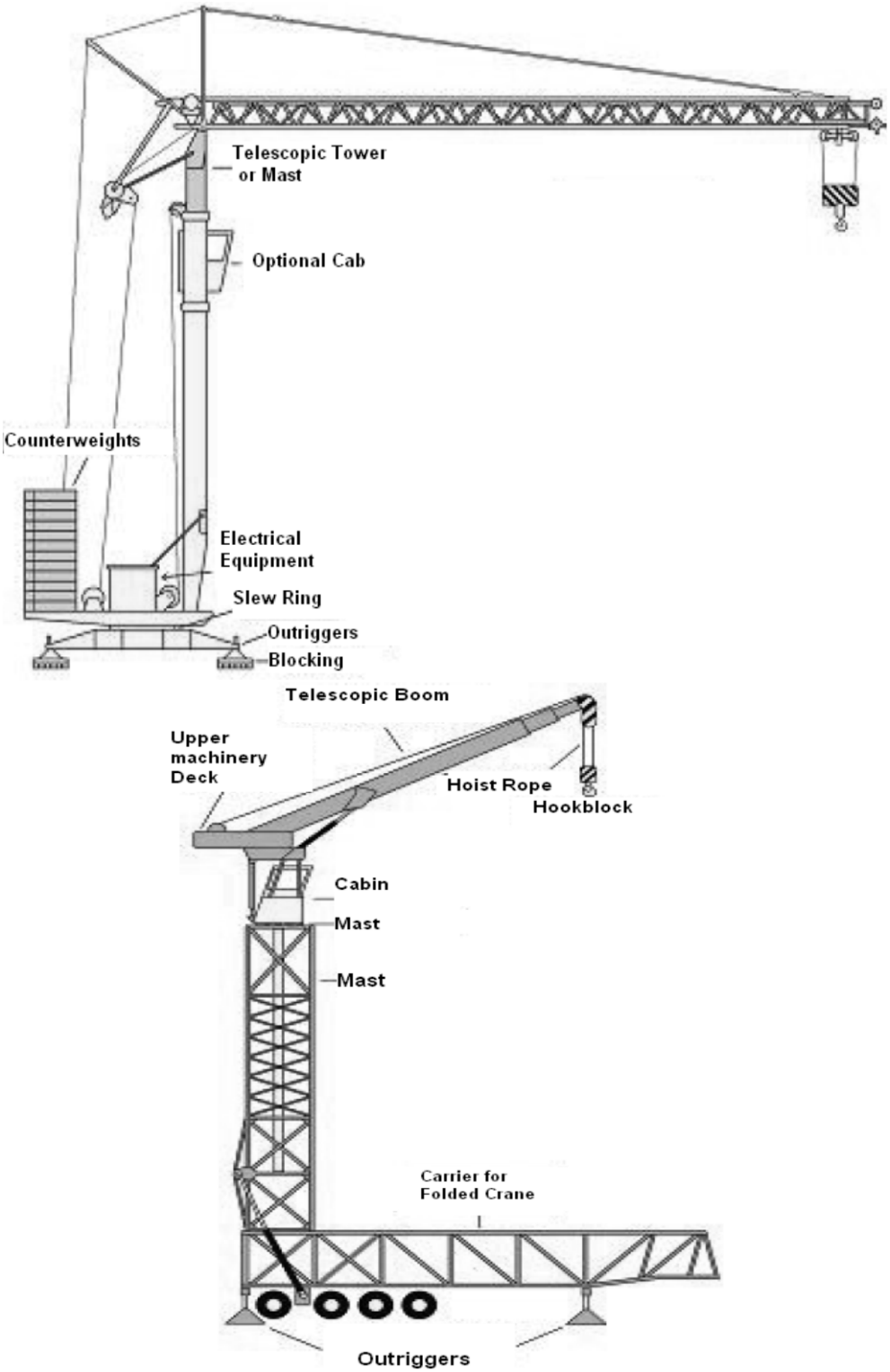

Figure 44-Types of Self-Erecting Tower Cranes.

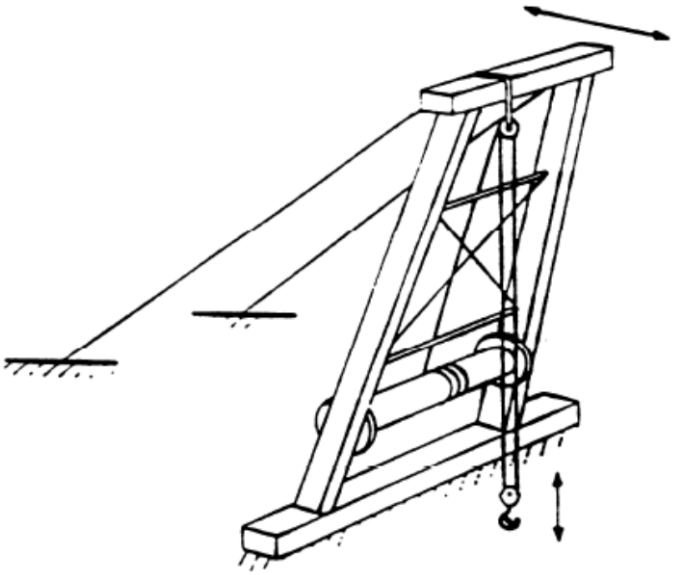

Breast Derrick

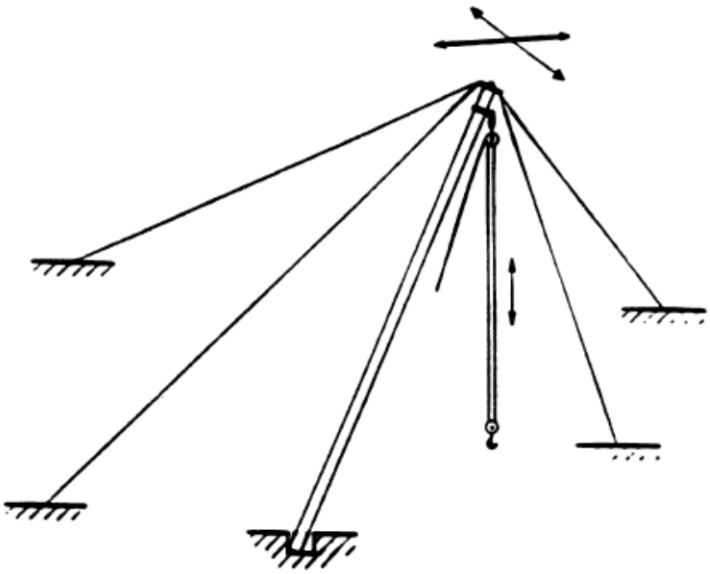

Gin-Pole Derrick

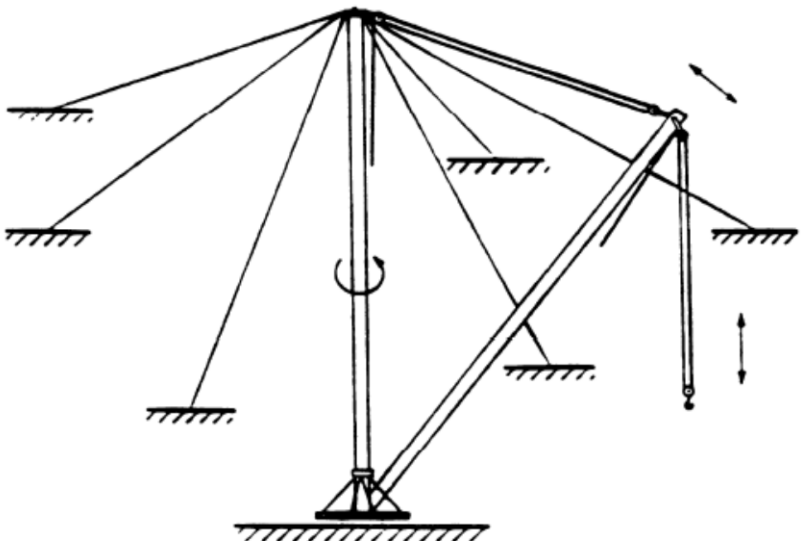

Guyed Derrick

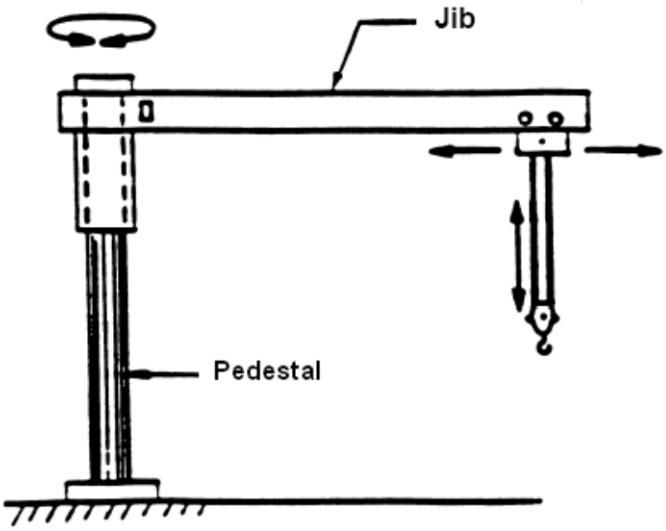

Pedestal-Jib Crane

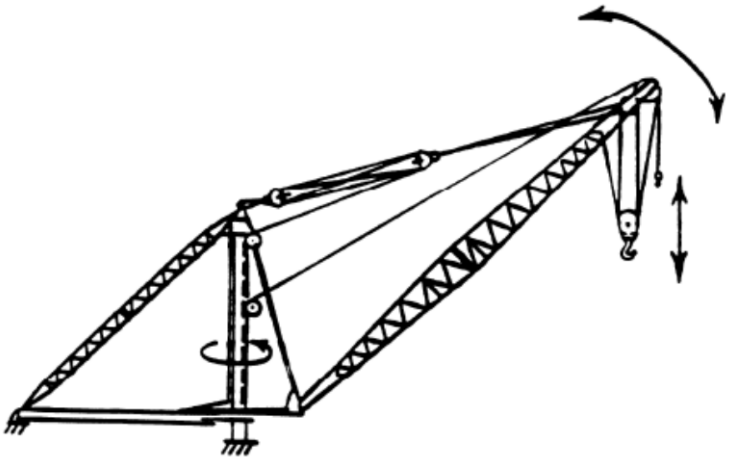

Stiff Leg Derrick

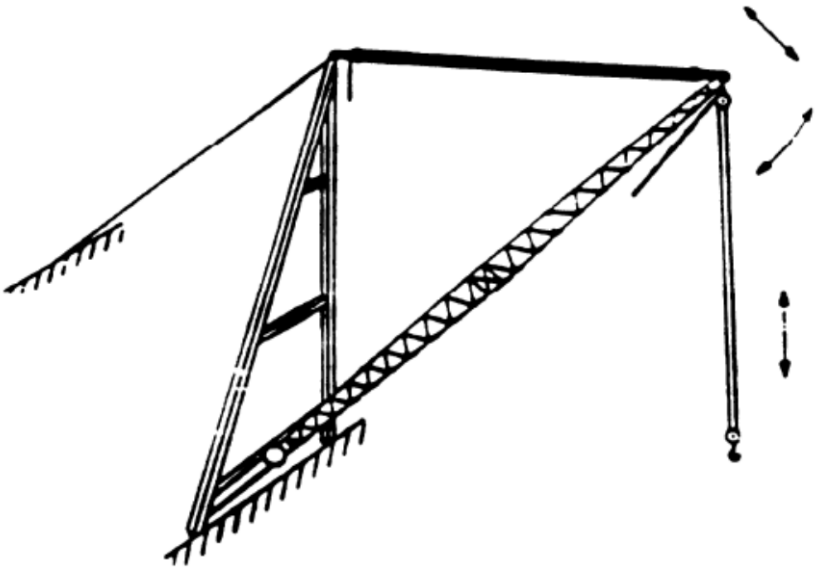

Figure 45-A-Frame Derrick
Types of Derricks.

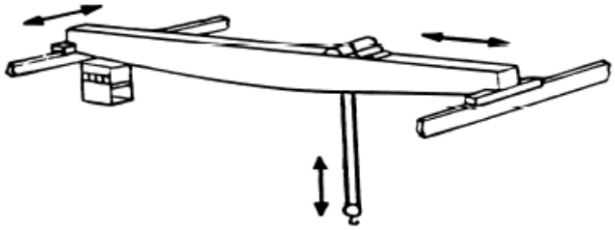

Top Running Bridge/Top Running Trolley

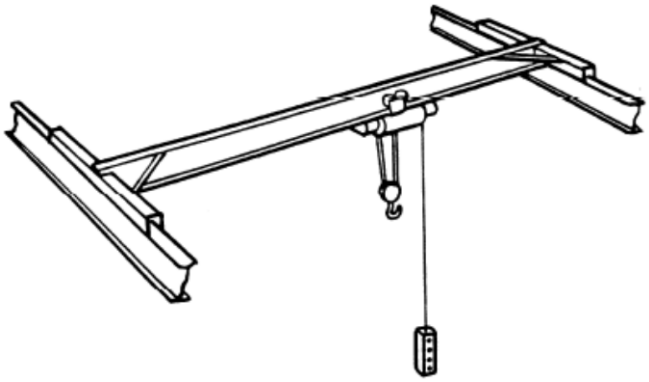

Top Running Bridge/Underhung Trolley

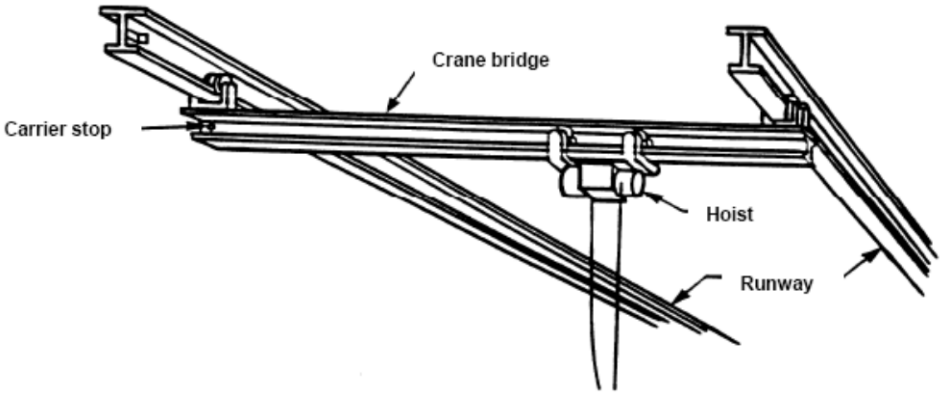

Underhung Bridge/Underhung Trolley

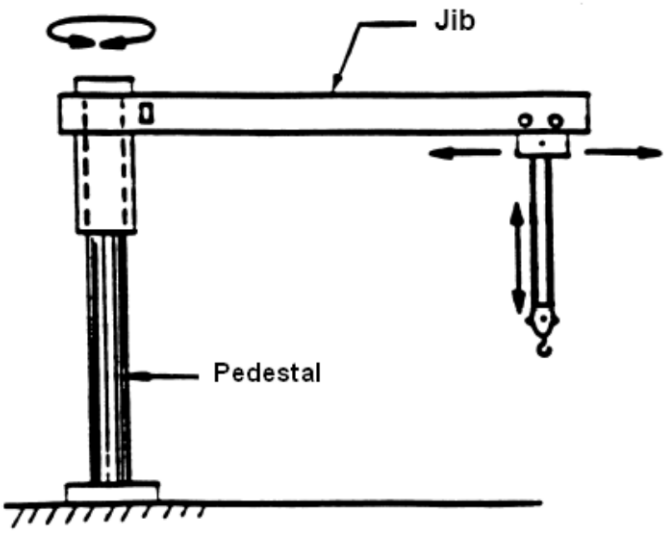

Pedestal-Jib Crane

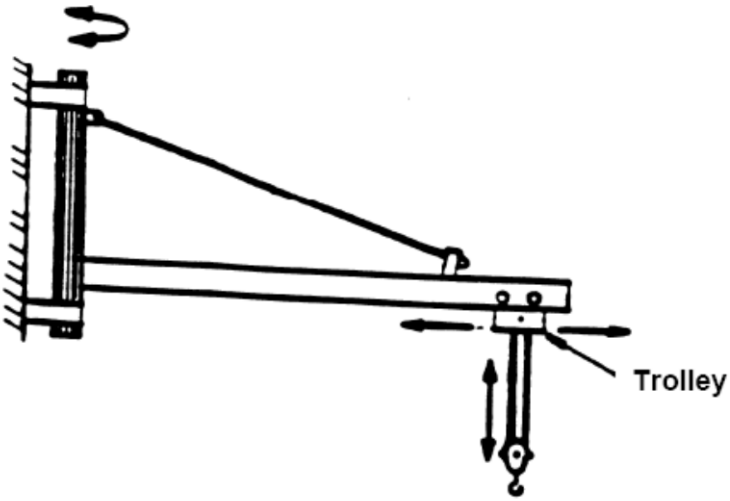

Jib Crane (Wall Mounted)

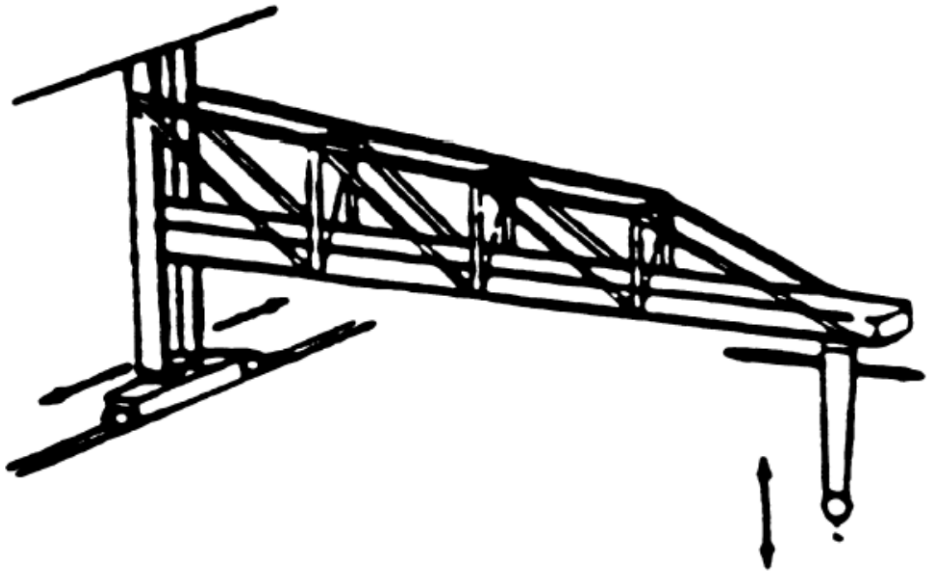

Figure 46-Types of Bridge Cranes.

[Statutory Authority: RCWs 47.17.010, 49.17.040, 49.17.050, 49.17.440 and 49.17.060. 12-01-086 (Order 08-32), § 296-155-56405, filed 12/20/11, effective 02/01/12.]

WAC 296-155-56410 Personnel Platform Lift Planning and Authorization Form.

Personnel Platform Lift Planning and Authorization Form

1. Location: _____ Date: _____
2. Purpose of the Lift: _____
3. Hoisting Equip. Mfg: _____ Model #: _____ Serial: _____
4. Expected Radius: _____ (maximum) _____ (at work location)
5. (a) Rated Load at Radius: _____ (b) Maximum Lift Load: _____ [50% of 5(a)]
6. Platform ID: _____ Platform Rating: _____
7. Platform Weight: _____ Type: (Pin On) _____ (Suspended) _____
8. (a) Number of Platform Occupants: _____ (b) Approx. Wt. (With Equip.) _____
9. Total Lift Weight: _____ [7 + 8(b)] [No more than 5(b) above]
10. Personnel Supervisor: _____
11. What are the Alternatives to This Lift? _____
12. Why are they not being used? _____
13. Pre-Lift Briefing Held (Date & Time): ____/____/_____ AM/PM
    Attendees: _____
14. Anticipated Hazards (wind, weather, visibility, power lines): _____
15. Lift Accomplished Date: _____ Time: _____
16. Remarks: _____

_____
Employer Signature Date

[Statutory Authority: RCWs 47.17.010, 49.17.040, 49.17.050, 49.17.440 and 49.17.060. 12-01-086 (Order 08-32), § 296-155-56410, filed 12/20/11, effective 02/01/12.]

WAC 296-155-56415 Qualifications for operators of below the hook lifting devices.

Table 40 Qualifications for Operators of Below the Hook Lifting Devices	
Type of Lifter	**Knowledge of**
All lifters	• Any special operations or precautions. • Manufacturer's suggested operating procedures. • Storage requirements of the lifter to protect it from damage.
Structural & Mechanical Vacuum. Close Proximity Lifting Magnets. Remotely Operated Lifting Magnets.	• Application of the lifter to the load and adjustments, if any, that adapt the lifter to various sizes or kinds of loads. • Condition of the load, such as but not limited to: – Balance. – Surface cleanliness. – Flatness. – Bending. – Load thickness. • Not exceeding the rated load of the lifting device nor the capacity of the hoisting equipment by the combined weight of the load, lifting device, and rigging. • The proper attachment of adapters to lifting for special load handling.
Vacuum Close Proximity Lifting magnets. Remotely Operated Lifting Magnets.	• Charging of battery (if applicable). • The use and understanding of: – Meters. – Alarms.
recommended that the operator demonstrates the ability to operate the lifter safely and as outlined above prior to using the lifter.	

[Statutory Authority: RCWs 47.17.010, 49.17.040, 49.17.050, 49.17.440 and 49.17.060. 12-01-086 (Order 08-32), § 296-155-56415, filed 12/20/11, effective 02/01/12.]

WAC 296-155-56420 Operator Certification: Written Examination: Technical Knowledge.

Criteria. This appendix contains information for employers, accredited testing organizations, auditors and government entities developing criteria for a written examination to test an individual's technical knowledge relating to the operation of cranes.

(1) General technical information.

(a) The functions and limitations of the crane and attachments.

(b) Wire rope:

(i) Background information necessary to understand the inspection and removal from service criteria in WAC 296-155-53404.

(ii) Capacity and when multi-part rope is needed.

(iii) Relationship between line pull and safe working load.

(iv) How to determine the manufacturer's recommended rope for the crane.

(c) Rigging devices and their use, such as:

(i) Slings.

(ii) Spreaders.

(iii) Lifting beams.

(iv) Wire rope fittings, such as clips, shackles and wedge sockets.

(v) Saddles (softeners).

(vi) Clamps (beams).

(d) The technical limitations of protective measures against electrical hazards:

(i) Grounding.

(ii) Proximity warning devices.

(iii) Insulated links.

(iv) Boom cages.

(v) Proximity to electric power lines, radii, and microwave structures.

(e) The effects of load share and load transfer in multi-crane lifts.

(f) Basic crane terms.

(g) The basics of machine power flow systems.

(i) Mechanical.

(ii) Electrical.

(iii) Pneumatic.

(iv) Hydraulic.

(v) Combination.

(h) The significance of the instruments and gauge readings.

(i) The effects of thermal expansion and contraction in hydraulic cylinders.

(j) Background information necessary to understand the requirements of pre-operation and inspection.

(k) How to use the safety devices and operational aids required under WAC 296-155-53410 and 296-155-53412.

(l) The difference between duty-cycle and lifting operations.

(m) How to calculate net capacity for every possible configuration of the equipment using the manufacturer's load chart.

(n) How to use manufacturer-approved attachments and their effect on the equipment.

(o) How to obtain dimensions, weight, and center of gravity of the load.

(p) The effects of dynamic loading from:

(i) Wind.

(ii) Stopping and starting.

(iii) Impact loading.

(iv) Moving with the load.

(q) The effect of side loading.

(r) The principles of backward stability.

(2) Site information.

(a) How to identify the suitability of the supporting ground/surface to support the expected loads of the operation. Elements include:

(i) Weaknesses below the surface (such as voids, tanks, loose fill).

(ii) Weaknesses on the surface (such as retaining walls, slopes, excavations, depressions).

(b) Proper use of mats, blocking/cribbing, outriggers, stabilizers, or crawlers.

(c) Identification of site hazards such as power lines, piping, and traffic.

(d) How to review operation plans with supervisors and other workers (such as the signal person), including how to determine working height, boom length, load radius, and travel clearance.

(e) How to determine if there is adequate room for extension of crawlers or outriggers/stabilizers and counterweights.

(3) Operations.

(a) How to pick, carry, swing and place the load smoothly and safely on rubber tires and on outriggers/stabilizers or crawlers (where applicable).

(b) How to communicate at the site with supervisors, the crew and the signal person.

(c) Proper procedures and methods of reeving wire ropes and methods of reeving multiple-part lines and selecting the proper load block and/or ball.

(d) How to react to changes in conditions that affect the safe operation of the equipment.

(e) How to shut down and secure the equipment properly when leaving it unattended.

(f) Know how to apply the manufacturer's specifications for operating in various weather conditions, and understand how environmental conditions affect the safe operation of the equipment.

(g) How to properly level the equipment.

(h) How to verify the weight of the load and rigging prior to initiating the lift.

(i) How to determine where the load is to be picked up and placed and how to verify the radii.

(j) Know basic rigging procedures.

(k) How to carry out the shift inspection required in this subsection.

(l) Know that the following operations require specific procedures and skill levels:

(i) Multi-crane lifts.

(ii) Hoisting personnel.

(iii) Clamshell/dragline operations.

(iv) Pile driving and extracting.

(v) Concrete operations, including poured-in-place and tilt-up.

(vi) Demolition operations.

(vii) Operations on water.

(viii) Magnet operations.

(ix) Multi-drum operations.

(m) Know the proper procedures for operating safely under the following conditions:

(i) Traveling with suspended loads.

(ii) Approaching a two-block condition.

(iii) Operating near power lines.

(iv) Hoisting personnel.

(v) Using other than full outrigger/crawler or stabilizer extensions.

(vi) Lifting loads from beneath the surface of the water.

(vii) Using various approved counterweight configurations.

(viii) Handling loads out of the operator's vision ("operating in the blind").

(ix) Using electronic communication systems for signal communication.

(n) Know the proper procedures for load control and the use of hand-held tag lines.

(o) Know the emergency response procedure for:

(i) Fires.

(ii) Power line contact.

(iii) Loss of stability.

(iv) Control malfunction.

(v) Two-blocking.

(vi) Overload.

(vii) Carrier or travel malfunction.

(p) Know how to properly use outriggers and stabilizers in accordance with manufacturer specifications.

(4) Use of load charts.

(a) Know the terminology necessary to use load charts.

(b) Know how to ensure that the load chart is the appropriate chart for the equipment in its particular configuration and application.

(c) Know how to use load charts. This includes knowing:

(i) The operational limits of load charts and footnotes.

(ii) How to relate the chart to the configuration of the crane, crawlers, or outriggers/stabilizers extended or retracted, jib erected or offset, and various counterweight configurations.

(iii) The difference between structural capacity and capacity limited by stability.

(iv) What is included in capacity ratings.

(v) The range diagram and its relationship to the load chart.

(vi) The work area chart and its relationship to the load chart.

(vii) Where to find and how to use the “parts-of-line” information.

(d) Know how to use the load chart together with the load indicators and/or load moment devices.

[Statutory Authority: RCWs 47.17.010, 49.17.040, 49.17.050, 49.17.440 and 49.17.060. 12-01-086 (Order 08-32), § 296-155-56420, filed 12/20/11, effective 02/01/12.]

WAC 296-155-56425 Sample declaration form for hours of experience.

DECLARATION OF [enter employee/operator name here]

STATE OF WASHINGTON)
)ss.

COUNTY OF enter county)

I, enter name of operator here, declare as follows:
I am over the age of 18 and competent to testify herein. I make the statements herein based upon personal knowledge.
I declare under penalty of perjury that the following table (on page 2) lists my experience in operating and working with cranes:

The 5 Categories of Cranes and their Types	***Number of Hours of Actual Crane Operating Experience***	***Number of Hours of Crane Related Experience***
(1) Mobile Cranes		
(a) Lattice Boom Crawler Cranes (LBC)	300 tons and above _____Hours	300 tons and above _____ Hours
	Under 300 tons _____ Hours	Under 300 tons _____ Hours
(b) Lattice Boom Truck Cranes (LBT)	300 tons and above _____ Hours	300 tons and above _____ Hours
	Under 300 tons _____ Hours	Under 300 tons _____ Hours
(c) Large Telescopic Boom Cranes (Swing Cab) (TLL) (including digger derricks)	Over 130 tons _____ Hours	Over 130 tons _____ Hours
	Over 40 tons to 130 tons _____ Hours	Over 40 tons to 130 tons _____ Hours
	40 tons and under _____ Hours	40 tons and under _____ Hours
(d) Small Telescopic Boom Cranes (Fixed Cab) (TSS) (including digger derricks)	Over 15 tons _____ Hours	Over 15 tons _____ Hours
	Over 5 tons to 15 tons _____ Hours	Over 5 tons to 15 tons _____ Hours
	5 tons and under _____ hours	5 tons and under _____ hours
(2) Articulating Boom Cranes	_____ Hours	_____ Hours

The 5 Categories of Cranes and their Types	*Number of Hours of Actual Crane Operating Experience*	*Number of Hours of Crane Related Experience*
(3) Tower Cranes		
(a) Hammerhead	_____ Hours	_____ Hours
(b) Luffer	_____ Hours	_____ Hours
(c) Self-Erecting	_____ Hours	_____ Hours
(4) Overhead Cranes/Bridge and Gantry		
(a) Cab Operated	_____ Hours	_____ Hours
(b) Pendant/Remote	_____ Hours	_____ Hours
(5) Derricks (not including digger derricks)	_____ Hours	_____ Hours
Hours of actual crane operating experience. For all cranes: Time while the operator is at the controls of the crane; and/or has direct control of that crane; and/or a combination of operating hours within the same crane type. For mobile cranes: It also includes time while installing/removing boom sections, luffing boom, jib, extending and retracting outriggers/stabilizers, leveling crane, and replacing hoisting rope. For tower cranes: It includes time while jumping (increasing the height of the tower/mast*). Note: Additional actual crane operator experience may account for crane related experience.*		
Hours of crane related experience: Time as a signal person/bellman, oiler, crane mechanic, crane inspector, formal classroom training, crane simulator operation, and a combination of operating hours on other categories of cranes.		

I declare under penalty of perjury that the foregoing is true and correct.

EXECUTED at City, Washington, this _____ day of month, 201.

_____

Signature of Operator

[Statutory Authority: RCWs 47.17.010, 49.17.040, 49.17.050, 49.17.440 and 49.17.060. 12-01-086 (Order 08-32), § 296-155-56425, filed 12/20/11, effective 02/01/12.]

WAC 296-155-56430 Assembly/disassembly Working under the boom, jib or other components: Sample procedures for minimizing the risk of unintended dangerous boom movement.

1. WAC 296-155-53402(7)(a) provides that when pins (or similar devices) are being removed, employees must not be under the boom, jib, or other components, except where the requirements of subsection (7)(b) are met. The exception in subsection (7)(b) applies when the employer demonstrates that site constraints require one or more employees to be under the boom, jib, or other components when pins (or similar devices) are being removed. In such a situation, the assembly/disassembly supervisor must implement procedures that minimize the risk of unintended dangerous movement and minimize the duration and extent of exposure under the boom.

   The following scenario is an example of how the exception applies: A boom cannot be disassembled on the ground because of an aboveground structure (as might be found, for example, at some construction sites) that precludes lowering the boom to the ground. The boom must therefore be disassembled in the air, and the employees who remove the pins must perform that work from an aerial lift whose base is positioned on one side (the near side) of the boom. To gain access to the pins on the far side, the aerial lift basket must move under the boom, since, due to lack of room, the aerial lift cannot be repositioned on the far side. Due to lack of room, the aerial lift cannot be repositioned on the far side, so the aerial basket must move under the boom to gain access to the pins on the far side.

   To minimize the risk of unintended dangerous movement while the pins are removed, the Assembly/disassembly director uses an assist crane that is rigged to support the boom section that is being detached, using particular care to ensure that the section end that is near the employee(s) removing the pins is well supported. The duration and extent of exposure is minimized by removing the far side pins first, moving the aerial lift basket as soon as possible to the near side so that the employees are no longer under the boom, and then removing the near side pins.

2. WAC 296-155-53402(9)(f)(i) provides that, during assembly/disassembly, the center of gravity of the load must be identified if that is necessary for the method used for maintaining stability. WAC 296-155-53402(9)(f)(ii) states that, where there is insufficient information to accurately identify the center of gravity, measures designed to prevent unintended dangerous movement resulting from an inaccurate identification of the center of gravity must be used.

An example of the application of WAC 296-155-53402(9)(f)(ii) is as follows. The boom is assembled by lowering boom sections sequentially into place using an assist crane. The assembly/disassembly director's plan is to keep the boom sections stable while they are lowered into place by attaching the assist crane hoist line above the center of gravity of each section. However, in assembling the non-symmetrical top section of the boom, the assembly/disassembly director is not able to determine where to attach the assist crane hoist line so that it is above the center of gravity. In this situation, before raising the section, all personnel are kept clear of the section and the section is first raised a few inches to determine whether it tips when raised (if it did tip, it would indicate it is not rigged over the center of gravity). If this occurs, the hoist line is repositioned and the procedure repeated (with employees kept clear of the section while it is raised) until the assembly/disassembly director determines that it is rigged over the center of gravity and can be moved into place without dangerous movement.

[Statutory Authority: RCWs 47.17.010, 49.17.040, 49.17.050, 49.17.440 and 49.17.060. 12-01-086 (Order 08-32), § 296-155-56430, filed 12/20/11, effective 02/01/12.]

WAC 296-155-56435 Work area chart.

Figure 47

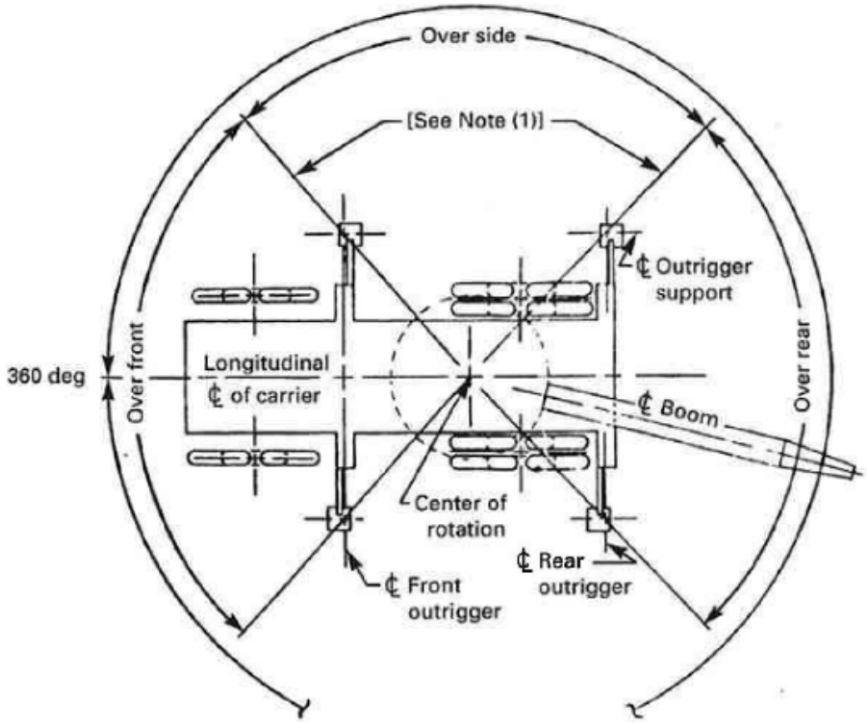

(a) Carrier on Outriggers – Front Outrigger Behind of Front Wheels [Note (2)]

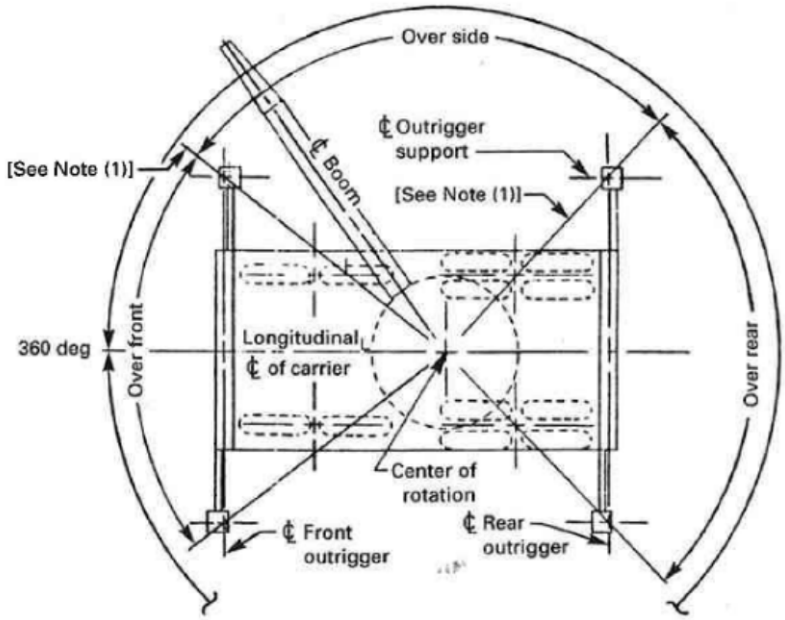

(b) Carrier on Outriggers – Front Outriggers Ahead of Front Wheels [Note (2)]

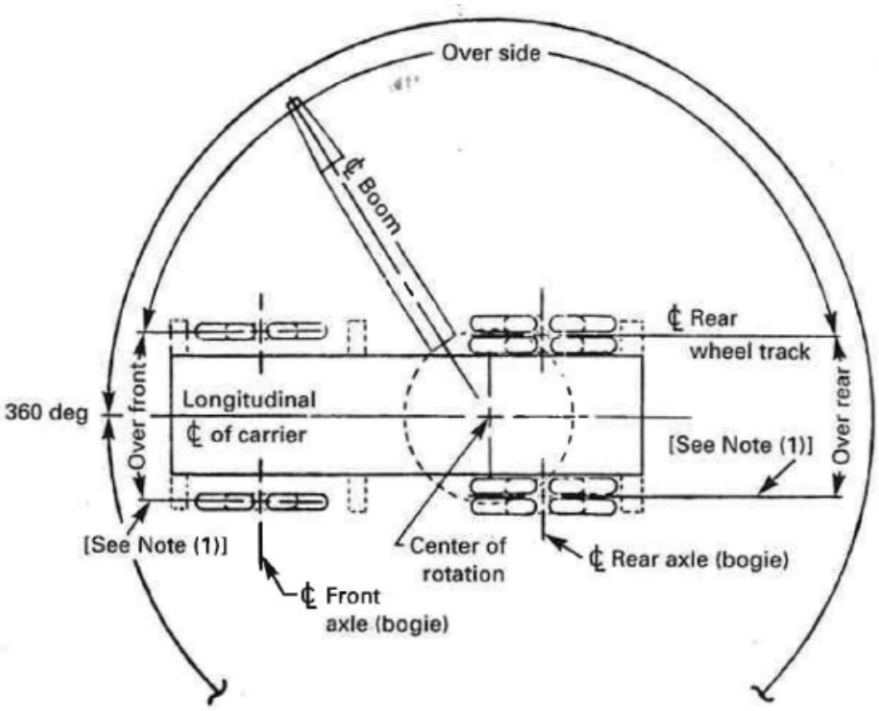

(c) Carrier on Tires [Note (2)]

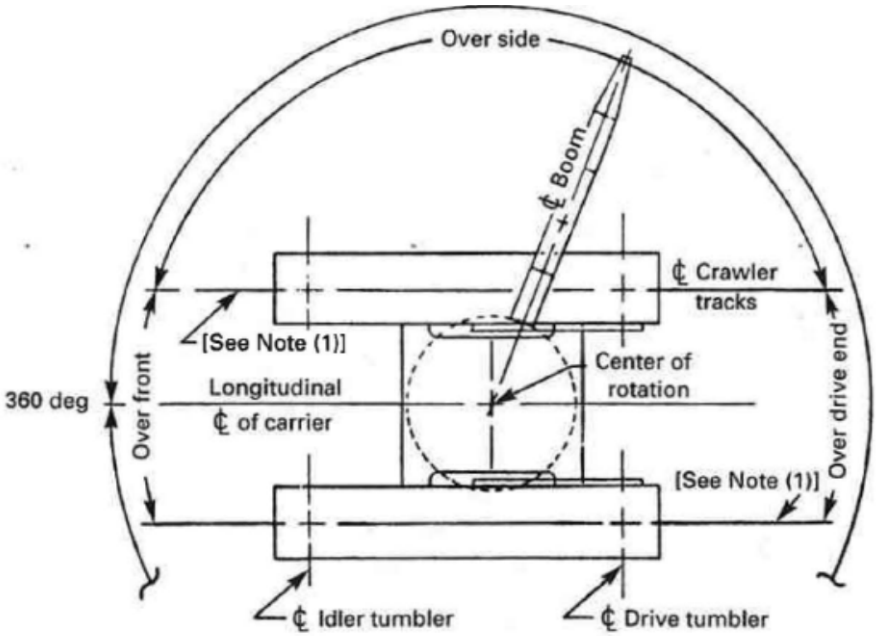

(d) Crawler Type Lower [Note (2)]

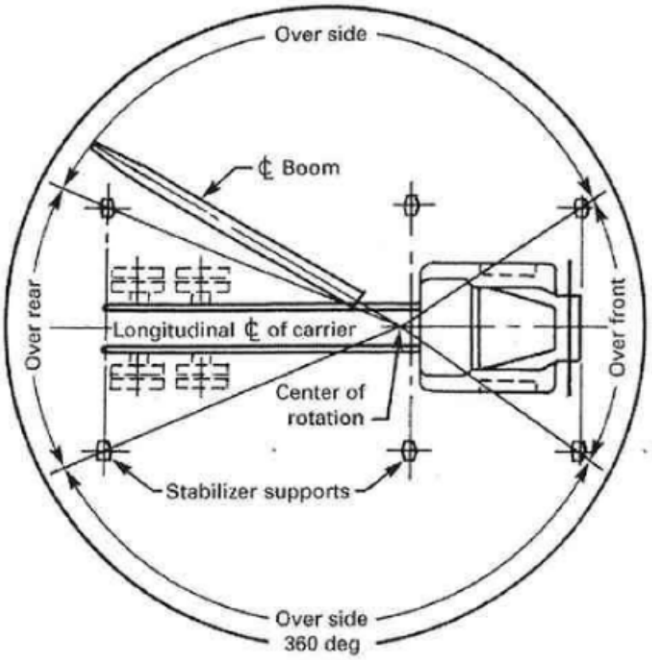

(e) Notes (1) and (2)

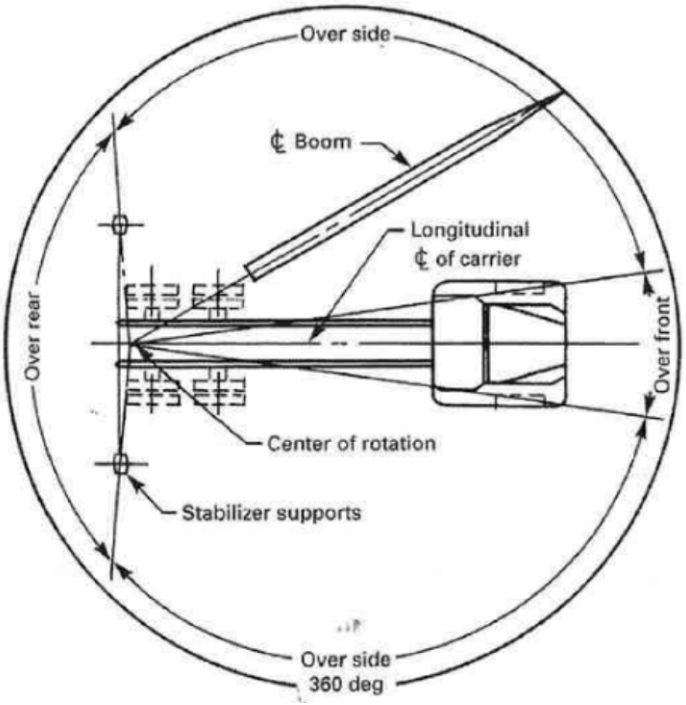

(f) Notes (1) and (2)

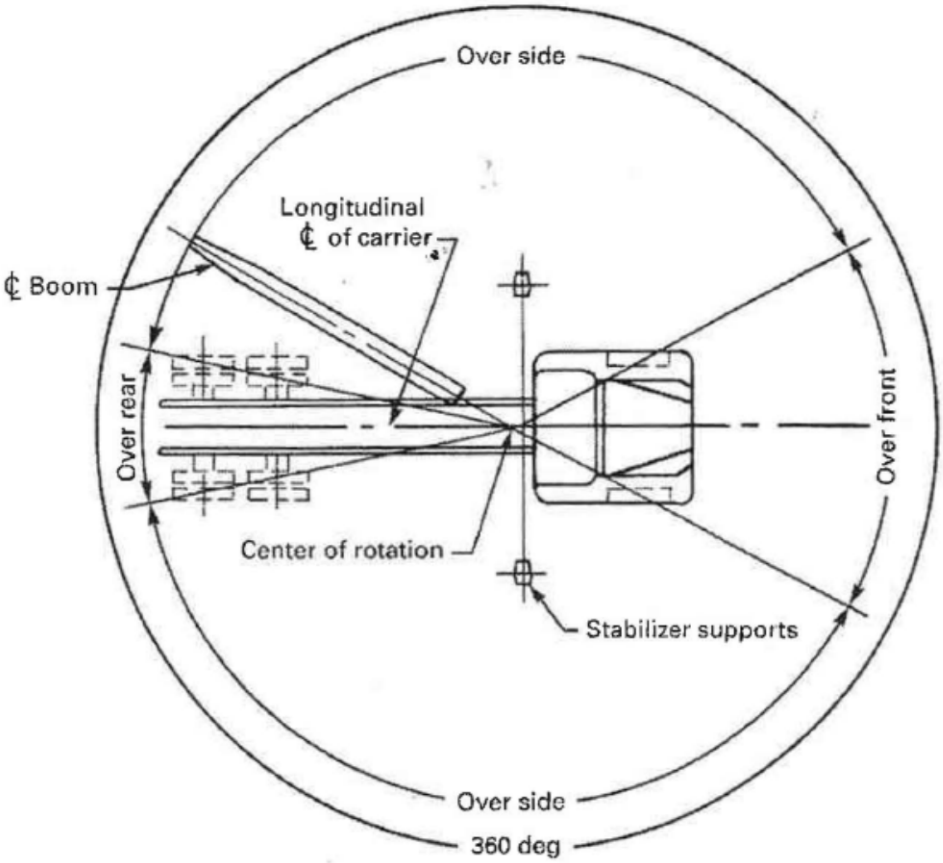

(g) Notes (1) and (2)

Notes:

(1) These lines determine the limiting position of any load for operation within the working areas indicated.

(2) Configurations that deviate sufficiently from the work areas shown in these figures must have their working areas defined by appropriate sets of diagrams supplied by the manufacturer or an RPE.

[Statutory Authority: RCWs 47.17.010, 49.17.040, 49.17.050, 49.17.440 and 49.17.060. 12-01-086 (Order 08-32), § 296-155-56435, filed 12/20/11, effective 02/01/12.]

PART M
MOTOR VEHICLES, MECHANIZED EQUIPMENT, AND MARINE OPERATIONS

LAST UPDATED: 05/20/2016

WAC 296-155-600 Definitions applicable to this part..... 1

WAC 296-155-605 Equipment..... 2

WAC 296-155-610 Motor vehicles on construction sites..... 3

WAC 296-155-615 Material handling equipment..... 7

WAC 296-155-620 Pile driving equipment..... 12

WAC 296-155-625 Site clearing..... 16

WAC 296-155-630 Marine operations and equipment..... 17

WAC 296-155-600 Definitions applicable to this part.

Apron. The area along the waterfront edge of the pier or wharf.

Bearing cap.

(a) A slab of reinforced concrete or a heavy timber and plank platform covering the top of a group of piles for the purpose of typing them together and transmitting to them as a group the superimposed load.

(b) A metal plate placed across the top of a steel tube pile to distribute the load from the steel tube to the concrete.

Bearing pile. A column of wood, metal or concrete or a combination of two or more of these materials, driven, jacked, or sunk with a water jet, into the earth to transmit and distribute loads to strata below the surface.

Bulwark. The side of a ship above the upper deck.

Caisson pile. A concrete pile case in an outer casing consisting of a series of telescoping steel tubes, the top section being the largest and usually twenty inches or more in diameter.

Coaming. The raised frame, as around a hatchway in the deck, to keep out water.

Composite pile. A pile which consists of a concrete pile superimposed on a wood pile.

Concrete pile.

- **Pedestal type** concrete pile means a cast-in-place pile with an enlarged (mushroom) base or foot.
- **Tapered type** concrete pile means a cast-in-place pile in a tapered metal shell.

Driving cap. A device placed on the top of a pile to prevent its breakage or injury during the driving operation.

H-pile. A pile formed of a structural steel column of “H” section.

Jacob's ladder. A marine ladder of rope or chain with wooden or metal rungs.

Pile driver. A device or piece of equipment used in driving piles.

Precast concrete pile. A pile which is cast in a form above ground.

Pretest or jack pile. A steel cylinder pile driven in section beneath an existing building and filled with concrete.

Rail. For the purpose of WAC 296-155-630, means a light structure serving as a guard at the outer edge of a ship's deck.

Sheet piling. A continuous vertical barricade consisting of squared timbers driven edge to edge, either square edged or tongued and grooved, or of a series of inter- locking steel shapes, to form a temporary wall about an excavation, and shored and braced as necessary.

Steel-tube A concrete-filled steel cylinder, consisting of an open or closed-end steel tube or cylinder.

Wood pile. A pile which is formed from the trunk of a tree or dimension timbers.

[Statutory Authority: RCW 49.17.010, .040, .050, and .060. 16-09-085 (Order 15-08), § 296-155-600, filed 04/19/16, effective, 05/20/16. Statutory Authority: Order 74-26, § 296-155-600, filed 5/7/74, effective 6/6/74.]

WAC 296-155-605 Equipment.

(1) **General requirements**.

(a) All equipment left unattended at night, adjacent to a highway in normal use, or adjacent to construction areas where work is in progress, must have appropriate lights or reflectors, or barricades equipped with appropriate lights or reflectors, to identify the location of the equipment.

(b) All tire servicing of multi-piece and single-piece rim wheels are subject to the requirements of chapter 296-864 WAC.

(c)

(i) Heavy machinery, equipment, or parts thereof, which are suspended or held aloft by use of slings, hoists, or jacks must be substantially blocked or cribbed to prevent falling or shifting before employees are permitted to work under or between them. Bulldozer and scraper blades, end-loader buckets, dump bodies, and similar equipment, must be either fully lowered or blocked when being repaired or when not in use. All controls must be in a neutral position, with the motors stopped and brakes set, unless work being performed required otherwise.

(ii) Whenever the equipment is parked, the parking brake must be set. Equipment parked on inclines must have the wheels chocked and the parking brake set.

(d) The use, care and charging of all batteries must conform to the requirements of part I of this chapter.

(e) All cab glass must be safety glass, or equivalent, that introduces no visible distortion affecting the safe operation of any machine covered by this part.

(f) All equipment covered by this part must comply with the requirements of WAC 296-155-428 (1)(e) when working or being moved in the vicinity of power lines or energized transmitters.

(g) Where traffic is diverted onto dusty surfaces, you must maintain good visibility by the suppression of dust, through the periodic application of oil or water to the grade surface, as required.

(h) No equipment, vehicle, tool, or individual must operate within 10 feet of any power line or electrical distribution equipment except in conformity with the requirements of WAC 296-155-77100(1)(h).

(2) **Specific requirements.** (Reserved.)

[Statutory Authority: RCW 49.17.010, .040, .050, and .060. 16-09-085 (Order 15-08), § 296-155-605, filed 04/19/16, effective, 05/20/16. Statutory Authority: RCWs 47.17.010, 49.17.040, 49.17.050, 49.17.440 and 49.17.060. 12-01-086 (Order 08-32), § 296-155-605, filed 12/20/11, effective 02/01/12. Statutory Authority: RCW 49.17.010, .020, .040, .050, and .060. 07-03-163 (Order 06-30), § 296-155-605, filed 01/24/07, effective 04/01/07. Statutory Authority: RCW 49.17.010, .040, .050,.060 RCW. 98-05-046 (Order 97-10), 296-155-605, filed 2/13/98, effective 4/15/98. RCW 49.17.040 and 49.17.050. 86-03-074 (Order 86-14), 296-155-605, filed 1/21/86; Order 74-26, 296-155-605, filed 5/7/74, effective 6/6/74.]

WAC 296-155-610 Motor vehicles on construction sites.

(1) **Scope**. Motor vehicles covered by this section include any vehicles that operate on a construction site. The requirements of this section do not apply to the equipment regulated by WAC 296-155-615, Material handling equipment.

(2) **General requirements for motor vehicles**.

(a) Braking systems.

- All vehicles must have:
  - A service brake system;
  - An emergency brake system; and
  - A parking brake system.
- These systems must be maintained in operable condition.
- These systems may use common components.

(b) Before leaving a motor vehicle unattended:

(i) The motor must be stopped.

(ii) The parking brake must be engaged and the wheels turned into curb or berm when parked on an incline.

(iii) If parking on an incline and there is no curb or berm, the wheels must be chocked or otherwise secured.

(c) Lighting systems. All vehicles, or combination of vehicles, must have brake lights in operable condition, regardless of light conditions.

- You must meet the requirements in Table 1 below.

Table 1

If:	Then:
Visibility conditions warrant additional light.	All vehicles, or combinations of vehicles, in use must be equipped with: At least two headlights in operable condition; and At least two taillights in operable condition.

(d) All vehicles must be equipped with an operable audible warning device (horn) at the operator's station.

(e) Operating vehicles, other than passenger cars and pickups, with an obstructed view to the rear. You must prohibit the use of any motor vehicle equipment that has an obstructed view to the rear unless the vehicle meets one of the following:

- Has an operable automatic reverse signal alarm audible above the surrounding noise level and audible no less than 15 feet from the rear of the vehicle; or
- Is backed up when an observer signals that it is safe to do so.

Reference: *For requirements on operating dump trucks in reverse, see (f) of this subsection , Operating dump trucks in reverse.*

Note:

- *If the surrounding noise level is so loud that reverse signal alarms are not effective, then an observer must be used.*
- *An observer can be any individual at the construction site, except a person performing the duties of a flagger. The observer must:*
  - *Be in a direct line-of-sight or able to communicate with the driver.*
  - *Be able to see the entire backing zone.*
  - *Continue to provide direction to the driver until:*
    - *The driver reaches the destination and stops; or*
    - *There are no longer employees in the backing zone and it is reasonable to expect that no employee(s) will enter the backing zone.*

(f) Operating dump trucks in reverse.

(i) You must make sure the dump truck has an operable automatic reverse signal alarm:

- Audible above the surrounding noise level; and
- Audible no less than 15 feet from the rear of the vehicle.

(ii) Before backing a dump truck the driver must determine that no one is currently in the backing zone and it is reasonable to expect that no employee(s) will enter the backing zone while operating the dump truck in reverse.

If employee(s) are in the backing zone or it is reasonable to expect that an employee(s) will enter the backing zone, you must make sure the truck is backed up only when:

- An observer signals that it is safe to back; or
- An operable mechanical device that provides the driver a full view behind the dump truck is used, such as a video camera.

Note: *The following diagram defines the backing zone. Distances are reported in feet.*

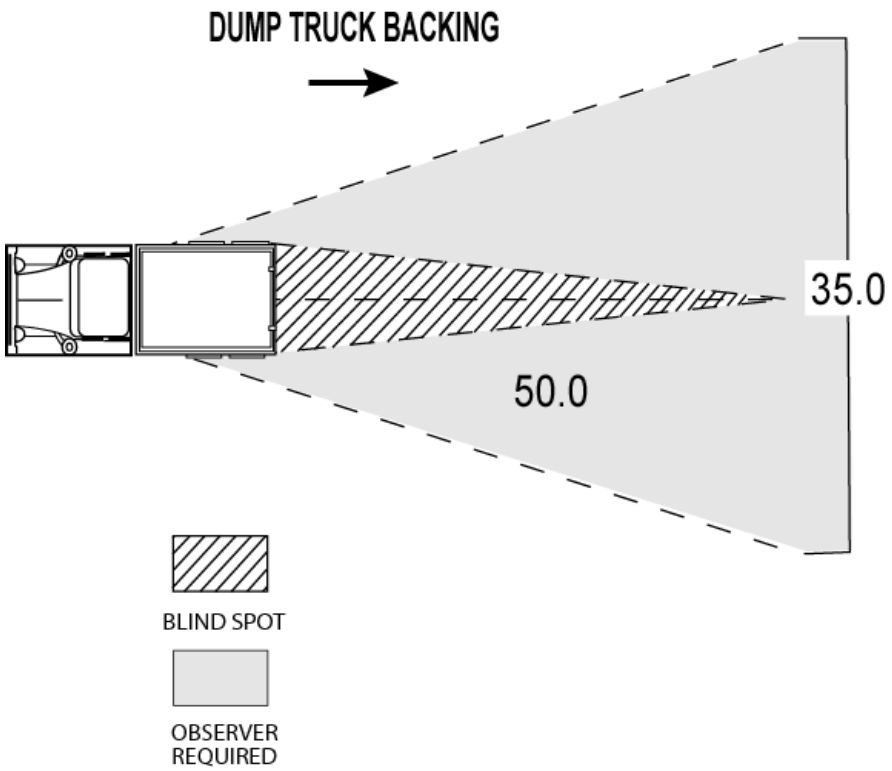

EXEMPTION:
• *Employees are considered protected when they are on the opposite side of a fixed barrier such as:* – *A jersey barrier;* – *Heavy equipment (such as a paving machine); or* – *A 6-inch concrete curb.*

Note:	*The term "**dump trucks**" includes both belly and rear dump trucks with a minimum payload of 4 yards.*

(g) Windshields.

- All vehicles with cabs must be equipped with:
  - Windshields;
  - Powered wipers; and
  - Rear view mirrors.
- Cracked or broken glass must be replaced.
- Vehicles operating in areas or under conditions that cause fogging or frosting of the windshields must be equipped with operable defogging or defrosting devices.

(h) Haulage vehicles. You must meet the requirements in Table 2 below.

Table 2	
If:	**Then:**
Any haulage vehicles payload is filled by: • Cranes • Power shovels; • Loaders; or • Similar equipment	You must have a cab shield and/or canopy adequate to protect the operator from shifting or falling materials.

(i) Securing material and employees.

- Tools and materials must be secured to prevent movement when transported in the same compartment as employees.
- Vehicles used to transport employees must have seats firmly secured and adequate for the number of employees to be carried.
- Seat belts and anchorages meeting the requirements of 49 CFR Part 571 (Department of Transportation, Federal Motor Vehicle Safety Standards) must be installed in all motor vehicles and used by all occupants of the vehicle.

(j) Trucks with dump bodies.

- Trucks with dump bodies or raisable platforms, beds, or boxes must be equipped with positive means of support, permanently attached. This positive means of support must be capable of being locked in position to prevent accidental lowering of the body while maintenance or inspection work is being done.
- Operating levers, controlling hoisting or dumping devices on haulage bodies, must be equipped with a latch or other device, such as a detent switch, which will prevent accidental starting or tripping of the mechanism.
- Trip handles for tailgates of dump trucks must be so arranged that, in dumping, the operator will be in the clear.

(k) Fenders on motor vehicle equipment.

- All rubber-tired motor vehicle equipment must be equipped with fenders.
- Mud flaps may be used in lieu of fenders whenever motor vehicle equipment is not designed for fenders.

(l) Vehicle safety inspections.

- You must check all vehicles in use at the beginning of each shift to make sure that the following parts, equipment, and accessories are in safe operating condition and free of apparent damage that could cause failure while in use:
  - Service brakes (including trailer brake connections);
  - Parking system (hand brake);
  - Emergency stopping system (brakes);
  - Tires;

- Horn;
- Steering mechanism;
- Coupling devices;
- Seat belts;
- Operating controls; and
- Safety devices.

- These requirements also apply where such equipment is necessary.
  - Lights;
  - Reflectors;
  - Windshield wipers;
  - Defrosters;
  - Fire extinguishers;
  - Steps and handholds for vehicle access; and
  - Any other necessary equipment.
- All defects must be corrected before the vehicle is placed in service.

[Statutory Authority: RCW 49.17.010, .040, .050, and .060. 16-09-085 (Order 15-08), § 296-155-610, filed 04/19/16, effective, 05/20/16. Statutory Authority: RCW 49.17.010, .040, .050, and .060. 04-24-089 (Order 04-02), § 296-155-610, filed 12/01/04, effective 01/01/05.] Statutory Authority: RCW 49.17.010, .040, .050, and .060. 04-10-107 (Order 04-24), § 296-155-610, filed 05/05/04, effective 05/12/04. Statutory Authority: RCW 49.17.040 and 49.17.050. 86-03-074 (Order 86-14), § 296-155-610, filed 1/21/86; Order 74-26, § 296-155-610, filed 5/7/74, effective 6/6/74.]

WAC 296-155-615 Material handling equipment.

(1) **General requirements for earthmoving equipment**.

(a) Scope.

These rules apply to the earthmoving equipment. Some examples of earthmoving equipment are:

- Scrapers;
- Loaders;
- Crawler or wheel tractors;
- Bulldozers;
- Off-highway trucks;
- Graders;
- Agricultural and industrial tractors; and
- Similar equipment.

(b) Seat belts.

- Seat belts must be provided and used by all operators and passengers on all equipment covered by this section.
- Seat belts must meet the requirements of the Society of Automotive Engineers, J386-1969, Seat Belts for Construction Equipment.

- Seat belts for agricultural and light industrial tractors must meet the seat belt requirements of Society of Automotive Engineers J333a-1970, Operator Protection for Agricultural and Light Industrial Tractors.

EXEMPTION:
Seat belts are not required for equipment designed only for standup operation.

- You must not use seat belts on equipment that does not have rollover protection structure (ROPS) or adequate canopy protection in place.

EXEMPTION:
Mechanics and persons in training may ride on the equipment without a seatbelt if one is not provided.

(c) Access roadways and grades.

- You must not operate equipment on access roadway or grades unless they are constructed and/or maintained to allow for the safe operation of the equipment.
- Every emergency access ramp and berm used by an employer must be constructed to restrain and control runaway vehicles.

(d) Brakes.

Earthmoving equipment must have brakes capable of stopping and holding the equipment fully loaded.

- Equipment mentioned in (a) of this subsection, General requirements for earthmoving equipment, must have brakes meeting the specifications in Society of Automotive Engineers SAE-J237, Loader Dozer-197l, J236, Graders-1971, and J319b, Scrapers-1971.
- Brake systems for self-propelled rubber-tired off-highway equipment manufactured after January 1, 1972, must meet the applicable minimum performance criteria set forth in the following Society of Automotive Engineers Recommended Practices:

Self-propelled scrapers	SAE J319b-1971
Self-propelled graders	SAE J236-1971
Truck and wagons	SAE J166-1971
Front-end loaders and dozers	SAE J237-1971

(e) Fenders.

- If pneumatic-tired earthmoving haulage equipment has a maximum speed that exceeds 15 miles per hour, then the equipment must be equipped with fenders on all wheels to meet the requirements of Society of Automotive Engineers SAE J321a-1970, Fenders for Pneumatic-Tired Earthmoving Haulage Equipment.

- You may, at any time, seek to show under WAC 296-155-010, Variance and procedure, that the uncovered wheels present no hazard to personnel from flying materials.

Note: Examples of pneumatic-tired earthmoving haulage equipment may include:

- *Trucks;*
- *Scrapers;*
- *Tractors; and*
- *Trailing units.*

(f) Rollover protective structures (ROPS).

For requirements pertaining to rollover protective structures and overhead protection, see WAC 296-155-950 through 296-155-965.

(g) Audible alarms.

- All bidirectional machines must be equipped with a horn, distinguishable from the surrounding noise level. This horn must be:
  - Operated as needed when the machine is moving in either direction; and
  - Maintained in an operative condition.

Note: Examples of bidirectional machines include:

- *Rollers;*
- *Compactors;*
- *Front-end loaders;*
- *Bulldozers; and*
- *Similar equipment.*

- You must make sure that earthmoving or compacting equipment with an obstructed view to the rear in reverse is not operated unless:
  - A reverse signal alarm distinguishable from the surrounding noise level is used; or
  - An observer signals that it is safe to back up.
- If the surrounding noise level is of such amplitude that reverse signal alarms are not effective, then you must use amber strobe lights.

(h) Operators must look in the direction of travel.

The driver must look in the direction of, and keep a clear view of the path of travel, when operating equipment in reverse.

EXEMPTION:
See (g)(ii) of this subsection, Audible alarms, for requirements pertaining to equipment that has an obstructed view to the rear.

(i) Scissor points.

Scissor points on all front-end loaders, which constitute a hazard to the operator during normal operation, must be guarded.

(j) Tractors.

- Tractor motors must be cranked only by operators or other experienced persons.
- You must provide waterproof and comfortable seat cushions on tractors at all times when working.
- Operator must not leave controls of tractor with master clutch engaged.

(k) Winch lines.

Winch lines must be maintained in good condition and provided with spliced eye, knob or hook in working end, except under conditions where unspliced end is required.

(l) Bulldozers and carry-all gates.

- You must not initiate repairs on blade or dozer equipment unless the motor has been stopped and dozer blade is resting on the ground or securely blocked. The same applies to carry-all gates.
- Bulldozer blades and carry-all gates must rest on the ground or on blocking when machines are not in operation.

(m) Moving equipment.

Personnel must not get on or off machine while machine is in motion.

(n) Hazardous conditions.

Where excessive dust conditions are created, you must sprinkle such areas with water or an environmentally safe solution to keep dust at a minimum.

Reference:	When dust presents a hazard, see chapter 296-841 WAC, Respiratory hazards for additional requirements.

(2) **Excavating and other equipment**.

(a) Tractors covered in subsection (1) of this section must have seat belts as required for the operators when seated in the normal seating arrangement for tractor operation.

(b) For the purposes of this part and of Part L of this chapter, the names and descriptions for measurement of dimensions of machinery and attachments must be as described in Society of Automotive Engineers 1970 Handbook, pages 1088 through 1103.

(c) You must comply with the safety requirements, ratios, or limitations applicable to machines or attachment usage covered in Power Crane and Shovel Association's Standards No. 1 and No. 2 of 1968, and No. 3 of 1969, and these requirements must also apply to cranes, machines, and attachments under this part.

(3) Lifting and hauling equipment (other than equipment covered under Part L of this chapter). Industrial trucks (including forklifts) must meet the requirements of chapter 296-863 WAC, WAC 296-155-605 and the following:

(a) Lift trucks, stackers, etc., must have the rated capacity clearly posted on the vehicle so as to be clearly visible to the operator. When auxiliary removable counter-weights are provided by the manufacturer, corresponding alternate rated capacities also must be clearly shown on the vehicle. These ratings must not be exceeded.

(b) No modifications or additions which affect the capacity or safe operation of the equipment must be made without the manufacturer's or professional engineer's written approval. If such modifications or changes are made, you must change the capacity, operation, and maintenance instruction plates, tags, or decals accordingly. In no case can the original safety factor of the equipment be reduced.

(c) If a load is lifted by two or more trucks working in unison, the proportion of the total load carried by any one truck must not exceed its capacity.

(d) Steering or spinner knobs must not be attached to the steering wheel unless the steering mechanism is of a type that prevents road reactions from causing the steering handwheel to spin. The steering knob must be mounted within the periphery of the wheel.

(e) All high lift rider industrial trucks must be equipped with overhead guards which meet the configuration and structural requirements as defined in paragraph 502 of American National Standards Institute B56.1-1975, Safety Standards for Powered Industrial Trucks.

(f) All industrial trucks in use must meet the applicable requirements of design, construction, stability, inspection, testing, maintenance, and operation, as defined in American National Standards Institute B56.1-1975, Safety Standards for Powered Industrial Trucks.

(g) You must not permit unauthorized personnel to ride on powered industrial trucks. You must provide a safe place to ride where riding of trucks is authorized.

(h) When a forklift truck is used for elevating workers you must specifically build a platform for that purpose and it must comply with the following requirements:

(i) The platform must be securely attached to the forks and must have standard guardrails and toeboards on all open sides.

(ii) The hydraulic system of the forklift must be so designed that the lift mechanism will not drop faster than 135 feet per minute in the event of a failure in any part of the system. Forklifts used for elevating platforms must be identified that they are so designed.

(iii) A safety strap must be installed or the control lever must be locked to prevent the boom from tilting.

(iv) An operator must be at the controls of the forklift equipment while persons are on the platform.

(v) The operator must be in the normal operating position while raising or lowering the platform.

(vi) The vehicle must not travel from point to point while workers are on the platform except that inching or maneuvering at very slow speed is permissible.

(vii) The area between workers on the platform and the mast must be adequately guarded to prevent contact with chains or other shear points.

(viii) You must visually inspect all platforms daily or before each use by the person in charge of the work being performed, and you must test them as frequently as is necessary to maintain minimum safety factors.

(ix) Whenever a truck, except for high lift order picker trucks, is equipped with vertical hoisting controls elevatable with the lifting carriage or forks, you must take the following precautions for the protection of personnel being elevated.

(A) Provide a platform secured to the lifting carriage and/or forks.

(B) Provide means whereby personnel on the platform can shut off power to the truck.

(C) Provide such protection from falling objects as indicated necessary by the operating conditions.

[Statutory Authority: RCW 49.17.010, .040, .050, and .060. 16-09-085 (Order 15-08), § 296-155-615, filed 04/19/16, effective, 05/20/16. Statutory Authority: RCW 49.17.010, .020, .040, .050, and .060. 07-03-163 (Order 06-30), § 296-155-615, filed 01/24/07, effective 04/01/07. Statutory Authority: RCW 49.17.010, .040, .050, and .060. 04-24-089 (Order 04-02), § 296-155-615, filed 12/01/04, effective 01/01/05. Statutory Authority: RCW 49.17.010, .040, .050. 00-01-176 (Order 99-18), § 296-155-615, filed 12/21/99, effective 03/01/2000. Statutory Authority: Chapter 49.17.010, .040, .050, .060 RCW. 98-05-046 (Order 97-10), 296-155-615, filed 2/13/98, effective 4/15/98. Chapter 49.17 RCW. 94-15-096 (Order 94-07), 296-155-615, filed 7/20/94, effective 9/20/94. Statutory Authority: RCW 49.17.040 and 49.17.050. 86-03-074 (Order 86-14), 296-155-615, filed 1/21/86; Order 74-26, 296-155-615, filed 5/7/74, effective 6/6/74.]

WAC 296-155-620 Pile driving equipment.

(1) **General requirements**.

(a) Boilers and piping systems which are a part of, or used with, pile driving equipment must meet the applicable requirements of the American Society of Mechanical Engineers, Powers Boilers (section I).

(b) All pressure vessels which are a part of or used with, pile driving equipment must meet the applicable requirements of the American Society of Mechanical Engineers, Pressure Vessels (section VIII).

(c) You must provide overhead protection, which will not obscure the vision of the operator, and which meets the requirements of Part L of this chapter. Protection must be of 2-inch planking or other solid material of equivalent strength.

(d) You must provide stop blocks for the leads to prevent the hammer from being raised against the head block.

(e) You must provide a blocking device, capable of safely supporting the weight of the hammer for placement in the leads under the hammer at all times while employees are working under the hammer.

(f) You must provide guards across the top of the head block to prevent the cable from jumping out of the sheaves.

(g) When the leads must be inclined in the driving of batter piles, you must make provisions to stabilize the leads.

(h) You must visually inspect all working equipment at the beginning of each shift.

(i) Fixed leads must be provided with ladder, and adequate rings, or similar attachment points, so that the loft workers may engage their full body harness lanyard to the leads. If the leads are provided with loft platform(s) such platform(s) must be protected by standard guardrails.

(j) Pile drivers with swinging leads must have a wire rope safety strap on top end.

(k) Spud bars must be of hard wood with smooth round handle end for safe handling. Iron shod spud bars are prohibited.

(l) A follower block or driving cap must be used with a drop hammer on all piling except sheet piling.

(m) Steam hose leading to a steam hammer or jet pipe must be securely attached to the hammer with an adequate length of at least 1/4-inch diameter chain or cable to prevent whipping in the event the joint at the hammer is broken. Air hammer hoses must be provided with the same protection as required for steam lines.

(n) You must provide safety chains, or equivalent means, for each hose connection to prevent the line from thrashing around in case the coupling becomes disconnected.

(o) Steam line controls must consist of two shutoff valves, one of which must be a quick-acting lever type within easy reach of the hammer operator.

(p) You must provide guys, outriggers, thrustouts, or counterbalances as necessary to maintain stability of pile driver rigs.

(q) You must install ladders constructed in compliance with this chapter on all pile drivers from the hoist platform to the head block, and in such position that workers using ladders will not come in contact with lines, sheaves, etc.

(r) You must not use drop hammers which have been chipped on the face for pile driving.

(s) You must replace or properly repair groove worn drums or spools to present a smooth working surface.

(t) You must maintain at least two full wraps of cable on hoisting drums.

(u) You must provide proper racks for storage of cross-cut saws.

(v) Every hoisting drum used as a pile driver must be equipped with manually operated dogs or pawls to hold suspended loads. You must only use foot brakes to hold suspended loads until drum dogs are engaged. The dogs must be visible from the operator's station or be equipped with a positive direct connected telltale which must be visible to the operator.

(w) No counterweight or spring arrangement on dogs is permitted which would allow dog to be automatically disengaged either by relieving the load or rolling the drum.

(x) In every crew you must designate a signalperson. The driver operator or drum person must receive signals from no others, except when loftworker is above. The hammer must not be lowered except on the loftworker's signal.

(y) You must not use spliced hammer lines.

(2) **Pile driving from barges and floats**. Barges or floats supporting pile driving operations must meet the applicable requirements of WAC 296-155-630.

(3) **Pile driving equipment**.

(a) Engineers and winchperson must accept signals only from the designated signalperson.

(b) You must keep all employees clear when piling is being hoisted into the leads.

(c) When piles are being driven in an excavated pit, the walls of the pit must be sloped to the angle of repose or sheet-piled and braced.

(d) When steel tube piles are being “blown out,” you must keep employees well beyond the range of falling materials.

(e) When it is necessary to cut off the tops of driven piles, you must suspend pile driving operations except where the cutting operations are located at least twice the length of the longest pile from the driver.

(f) When driving jacked piles, you must provide all access pits with ladders and bulkheaded curbs to prevent material from falling into the pit.

(g) Floating equipment such as dredges and pile drivers must maintain a signal system to shore in the event of an emergency.

(h) The distribution of machinery on floating equipment must be such that the completed unit floats on an even keel.

(i) Fuel tanks below decks must be vented to outside of hull and vents must be equipped with flame arrestors.

(j) All hull compartments must be ventilated. No person must work in hull compartments until it is shown the compartments contain no flammable or toxic concentrations.

(k) Light fixtures installed or used within the hull must be explosion proof.

(l) All floating rigs must be equipped with ladderways extending from the deck to the waterline where the deck is more than 36 inches above the water. You must hang a wire rope along both sides of the hull or float so that it is near or at the waterline.

(m) Doors of deck houses where deck house sets within 36" of edge of deck and doorways in hull must be equipped with guard rails or cross chains.

(n) Deck houses must have a substantial grab rail installed on all sides where such installation will not interfere with operations.

(o) You must guard pile driver and dredge fairlead sheaves, and spudline sheaves to prevent workers or tools being drawn into them.

(p) You must keep all work deck clear of debris, unnecessary tools and equipment in order to minimize the stumbling hazard. You must coil lines, store tools and stack materials clear of working spaces.

(q) Night operations must be adequately lighted for all activity while work is in progress and must be maintained until workers leave the work area.

(r) Electrical installation and equipment must be installed and maintained in compliance with the National Electric Code.

(s) All walkways over water and on dredge pontoon discharge pipe lines must be a minimum of 20" in width with standard handrail along one side on structures and gang planks. Walkways on pontoon lines may be equipped with hand lines in lieu of standard handrail.

(t) You must provide adequate fire extinguishing equipment and maintain it in a serviceable condition.

(u) You must use protective equipment when working with creosote timbers. Protective creams must be used on exposed skin surfaces and gloves and eye protection worn especially when driving piles.

(v) Pulling piles with hammer or pile line rigged through the head block is prohibited unless driver and rigging are designed to safely withstand the imposed strain.

(w) Truck runways and platforms must be equipped with a wheel guard on all outside edges. Top of wheel guards must be a minimum of 10 inches above deck.

(x) Use of foot blocks at base of leads for hammer line or pile line is prohibited.

[Statutory Authority: RCW 49.17.010, .040, .050, and .060. 16-09-085 (Order 15-08), § 296-155-620, filed 04/19/16, effective, 05/20/16. Statutory Authority: Chapter 49.17 RCW. 94-15-096 (Order 94-07), § 296-155-620, filed 7/20/94, effective 9/20/94; 91-03-044 (Order 90-18), § 296-155-620, filed 1/10/91, effective 2/12/91; Order 76-29, § 296-155-620, filed 9/30/76; Order 74-26, § 296-155-620, filed 5/7/74, effective 6/6/74.]

WAC 296-155-625 Site clearing.

(1) **General**.

(a) The word ***"clearing"*** means the removal of trees, stumps, logs, brush, debris and rubbish from the surface of the ground in preparation of a site for construction work of any kind. The removal of trees and logs must be in accordance with the requirements of chapter 296-54 WAC.

(b) You must maintain all equipment and tools such as axes, sledges, wedges, saws, springboards, etc., in a safe condition and guard with standard safeguards.

(c) Fallers must give warning to brushing crews, buckers and other persons in the vicinity where a tree is being felled; taking notice that such persons are not only out of the reach of tree, but also out of danger of possible sidewinders, snags or other trees which may be knocked over by the tree being felled.

(d) Trees must not be felled toward and within range of a traveled road or operational railroad unless a flagger is used to stop all approaching persons, vehicles, or railroad equipment. Flaggers and flagging activities at the site must comply with the requirements of WAC 296-155-305.

(e) You must not place clearing crews immediately below other crews working on hillsides where there is a possible danger of skidding or rolling trees, moving earth or rock.

(f) Pioneer roads on clearing operations must be constructed to safely accommodate all equipment moved over road.

(g) You must move hazardous standing and down timber, rocks, etc., from upper sides of cuts on side hill operations.

(h) You must exercise care in the use of oil for burning brush or timber.

(i) You must protect employees engaged in site clearing from hazards of irritant and toxic plants and suitably instructed in the first-aid treatment available.

(j) All equipment used in site clearing operations must be equipped with rollover guards meeting the requirements of this chapter. In addition, rider-operated equipment must be equipped with an overhead and rear canopy guard meeting the following requirements:

(i) The overhead covering on this canopy structure must be of not less than 1/8-inch steel plate or 1/4-inch woven wire mesh with openings no greater than one inch, or equivalent.

(ii) The opening in the rear of the canopy structure shall be covered with not less than 1/4-inch woven wire mesh with openings no greater than one inch.

(iii) Use of 1/2 inch thick plastic sheets or other thicknesses of plastic panels derived from polycarbonate, acrylic, cellulose acetate butyrate which provides equivalent or better protection against particular hazards involved is acceptable in lieu of 1 or 1 3/4 inch open mesh material.

(A) All panels must be installed in a manner which can withstand the initial impact, and maintain the protective barrier integrity; and

(B) All panels must be labeled or marked to distinguish between acceptable and inferior materials.

(k) In addition to observance of the general safety and health standards;

(i) You must assume the responsibility of work assignment so that no worker will be required to work in a position or location so isolated as to not be within ordinary calling distance of another person who can render assistance in case of emergency. In any operation where cutting, felling trees, loading, or a combination of these duties is carried on, there must be a minimum crew of two persons who must work as a team and must be in visual or voice contact with one another. If one worker at these operations is required to be left alone for a period of time, the worker must be contacted by another person at reasonable intervals not to exceed 15 minutes unless such practice can be established to be impractical.

(ii) This does not apply to operators of motor vehicles, watchpersons or certain other jobs which, by their nature, are singular worker assignments. However, a definite procedure for checking the welfare of all workers during working hours must be instituted and all workers so advised.

[Statutory Authority: RCW 49.17.010, .040, .050, and .060. 16-09-085 (Order 15-08), § 296-155-625, filed 04/19/16, effective, 05/20/16. Statutory Authority: RCW 49.17.010, .040, .050; Chapter 239, Laws of 2000 (ESHB 2647); and Chapter 34.05 RCW. 01-04-015 (Order 00-03), § 296-155-625, filed 01/26/01, effective 02/28/01. Statutory Authority: Chapter 49.17 RCW. 94-15-096 (Order 94-07), § 296-155-625, filed 7/20/94, effective 9/20/94; 91-03-044 (Order 90-18), § 296-155-625, filed 1/10/91, effective 2/12/91. Statutory Authority: RCW 49.17.040 and 49.17.050. 86-03-074 (Order 86-14), § 296-155-625, filed 1/21/86; Order 74-26, § 296-155-625, filed 5/7/74, effective 6/6/74.]

WAC 296-155-630 Marine operations and equipment.

(1) **Material handling operations**.

You must perform operations fitting the definition of ***"material handling"*** in conformance with applicable requirements of "Safety and health regulations for longshoring." The term ***"longshoring operations"*** means the loading, unloading, moving, or handling of construction materials, equipment and supplies, etc. into, in, on, or out of any vessel, from a fixed structure or shore-to-vessel, vessel-to-shore or fixed structure or vessel-to-vessel.

(2) **Access to barges**.

(a) Ramps for access of vehicles to or between barges must be of adequate strength, provided with side boards, well maintained, and properly secured.

(b) Unless employees can step safely to or from the wharf, float, barge, or river towboat, you must provide either a ramp, meeting the requirements of (a) of this subsection, or a safe walkway.

(c) Jacob's ladders must be of the double rung or flat tread type. You must maintain them well and properly secure them.

(d) A Jacob's ladder must either hang without slack from its lashings or be pulled up entirely.

(e) When the upper end of the means of access rests on or is flush with the top of the bulwark, you must ensure that substantial steps, properly secured and equipped with at least one substantial hand rail approximately 33 inches in height, are provided between the top of the bulwark and the deck.

(f) You must not lay obstructions on or across the gangway.

(g) The means of access must be adequately illuminated for its full length.

(h) Unless the structure makes it impossible, the means of access must be so located that the load will not pass over employees.

(3) **Working surfaces of barges**.

(a) You must not permit employees to walk along the sides of covered lighters or barges with coamings more than 5 feet high, unless there is a 3-foot clear walkway, or a grab rail, or a taut handline is provided.

(b) You must maintain decks and other working surfaces in a safe condition.

(c) You must not permit employees to pass fore and aft, over, or around deckloads, unless there is a safe passage.

(d) You must not permit employees walk over deckloads from rail to coaming unless there is a safe passage. If it is necessary to stand at the outboard or inboard edge of the deckload where less than 24 inches of bulwark, rail, coaming, or other protection exists, you must provide all employees with a suitable means of protection against falling from the deckload.

(4) **First-aid and lifesaving equipment**.

(a) Provisions for rendering first aid and medical assistance must be in accordance with Part B of this chapter.

(b) You must ensure that there is in the vicinity of each barge in use at least one U.S. Coast Guard-approved 30-inch life ring with not less than 90 feet of line attached, and at least one portable or permanent ladder which will reach the top of the apron to the surface of the water. If the above equipment is not available at the pier, the employer must furnish it during the time that the employer is working the barge.

(c) You must protect employees walking or working on the unguarded decks of barges with U.S. Coast Guard-approved personal flotation devices such as Type I PFD, Type II PFD, Type III PFD, or Type V PFD, or their equivalent, pursuant to 46 CFR 160 (Coast Guard Lifesaving Equipment Specifications) and 33 CFR 175.23 (Coast Guard table of devices equivalent to personal flotation devices). Ski belt or inflatable type personal flotation devices are specifically prohibited.

(5) Diving operations. (Reserved.)

[Statutory Authority: RCW 49.17.010, .040, .050, and .060. 16-09-085 (Order 15-08), § 296-155-630, filed 04/19/16, effective, 05/20/16. Statutory Authority: Chapter 49.17 RCW. 94-15-096 (Order 94-07), § 296-155-630, filed 7/20/94, effective 9/20/94; Order 76-29, § 296-155-630, filed 9/30/76; Order 74-26, § 296-155-630, filed 5/7/74, effective 6/6/74.]

PART N
EXCAVATION, TRENCHING, AND SHORING

LAST UPDATED: 05/20/2016

WAC 296-155-650 Scope, application, and definitions applicable to this part. 1

WAC 296-155-655 General protection requirements. 3

WAC 296-155-66103 Reserved. 10

WAC 296-155-66105 Reserved. 10

WAC 296-155-66109 Reserved. 10

WAC 296-155-664 Appendices. 10

WAC 296-155-66401 Appendix A-Soil classification. 10

WAC 296-155-66403 Appendix B-Sloping and benching. 15

WAC 296-155-66405 Appendix C-Timber shoring for trenches. 26

WAC 296-155-66407 Appendix D-Aluminum hydraulic shoring for trenches. 36

WAC 296-155-66409 Appendix E-Alternatives to timber shoring. 44

WAC 296-155-66411 Appendix F-Selection of protective systems. 46

WAC 296-155-650 Scope, application, and definitions applicable to this part.

(1) **Scope and application**. This part applies to all open excavations made in the earth's surface. Excavations are defined to include trenches.

(2) **Definitions applicable to this part**.

Accepted engineering requirements or practices. Those requirements which are compatible with standards of practice required by a registered professional engineer.

Aluminum hydraulic shoring. A preengineered shoring system comprised of aluminum hydraulic cylinders (crossbraces) used in conjunction with vertical rails (uprights) or horizontal rails (walers). Such system is designed, specifically to support the sidewalls of an excavation and prevent cave-ins.

Bell-bottom pier hole. A type of shaft or footing excavation, the bottom of which is made larger than the cross section above to form a belled shape.

Benching (benching system). A method of protecting employees from cave-ins by excavating the sides of an excavation to form one or a series of horizontal levels or steps, usually with vertical or near-vertical surfaces between levels.

Cave-in. The separation of a mass of soil or rock material from the side of an excavation, or loss of soil from under a trench shield or support system, and its sudden movement into the excavation in quantity that it could entrap, bury, injure, or immobilize a person.

Competent person. One who can identify existing or predictable hazards in the surroundings that are unsanitary, hazardous, or dangerous to employees. Also has authorization or authority by the nature of their position to take prompt corrective measures to eliminate them. The person must be knowledgeable in the requirements of this part.

Cross braces. The horizontal members of a shoring system installed perpendicular to the sides of the excavation, the ends of which bear against either uprights or wales.

Excavation. Any person-made cut, cavity, trench, or depression in the earth's surface, formed by earth removal.

Faces or sides. The vertical or inclined earth surfaces formed as a result of excavation work.

Failure. The breakage, displacement, or permanent deformation of a structural member or connection so as to reduce its structural integrity and its supportive capabilities.

Hazardous atmosphere. A atmosphere which by reason of being explosive, flammable, poisonous, corrosive, oxidizing, irritating, oxygen deficient, toxic, or otherwise harmful, may cause death, illness, or injury.

Kickouts. Accidental release or failure of a cross brace.

Protective system. A method of protecting employees from cave-ins, from material that could fall or roll from an excavation face or into an excavation, or from the collapse of adjacent structures. Protective systems include support systems, sloping and benching systems, shield systems, and other systems that provide the necessary protection.

Ramp. An inclined walking or working surface that is used to gain access to one point to another, and is constructed from earth or from structural materials such as steel or wood.

Registered professional engineer. A person who is registered as a professional engineer in the state of Washington. The registered professional engineer must comply with the Washington state department of licensing requirements, chapter 18.43 RCW.

Sheeting. The members of a shoring system that retain the earth in position and in turn are supported by other members of the shoring system.

Shield (shield system). A structure that is able to withstand the forces imposed on it by a cave-in and thereby protect employees within the structure. Shields can be permanent structures or can be designed to be portable and moved along as work progresses. Additionally, shields can be either premanufactured or job-built in accordance with WAC 296-155-657 (3)(c) or (d). Shields used in trenches are usually referred to as "trench boxes" or "trench shields."

Shoring (shoring system). A structure such as a metal hydraulic, mechanical, or timber shoring system that supports the sides of an excavation and which is designed to prevent cave-ins.

Sides. See "faces."

Sloping (sloping system). A method of protecting employees from cave-ins by excavating to form sides of an excavation that are inclined away from the excavation so as to prevent cave-ins. The angle of incline required to prevent a cave-in varies with differences in such factors as the soil type, environmental conditions of exposure, and application of surcharge loads.

Stable rock. A natural solid mineral material that can be excavated with vertical sides and will remain intact while exposed. Unstable rock is considered to be stable when the rock material on the side or sides of the excavation is secured against caving-in or movement by rock bolts or by another protective system that has been designed by a registered professional engineer.

Structural ramp. A ramp built of steel or wood, usually used for vehicle access. Ramps made of soil or rock are not considered structural ramps.

Support system. A structure such as underpinning, bracing or shoring, which provides support to an adjacent structure, underground installation, or the sides of an excavation.

Tabulated data. Tables and charts approved by a registered professional engineer and used to design and construct a protective system.

Trench (trench excavation). A narrow excavation in relation to its length made below the surface of the ground. In general, the depth is greater than the width, but the width of a trench (measured at the bottom) is not greater than 15 feet (4.6m). If forms or other structures are installed or constructed in an excavation so as to reduce the dimension measured from the forms or structure to the side of the excavation to 15 feet (4.6 m) or less (measured at the bottom of the excavation), the excavation is also considered to be a trench.

Trench box. See "shield."

Trench shield. See "shield."

Uprights. The vertical members of a trench shoring system placed in contact with the earth and usually positioned so that individual members do not contact each other. Uprights placed so that individual members are closely spaced, in contact with or interconnected to each other, are often called "sheeting."

Wales. Horizontal members of a shoring system placed parallel to the excavation face whose sides bear against the vertical members of the shoring system or earth.

[Statutory Authority: RCW 49.17.010, .040, .050, and .060. 16-09-085 (Order 15-08), § 296-155-650, filed 04/19/16, effective, 05/20/16. Statutory Authority: Chapter 49.17 RCW. 94-15-096 (Order 94-07), § 296-155-650, filed 7/20/94, effective 9/20/94. Statutory Authority: Chapter 49.17 RCW and RCW 49.17.040, [49.17].050 and [49.17].060. 92-22-067 (Order 92-06), § 296-155-650, filed 10/30/92, effective 12/8/92. Statutory Authority: Chapter 49.17 RCW. 91-03-044 (Order 90-18), § 296-155-650, filed 1/10/91, effective 2/12/91. Statutory Authority: RCW 49.17.040 and 49.17.050. 86-03-074 (Order 86-14), § 296-155-650, filed 1/21/86. Statutory Authority: RCW 49.17.040, 49.17.050 and 49.17.240. 81-13-053 (Order 81-9), § 296-155-650, filed 6/17/81; Order 74-26, § 296-155-650, filed 5/7/74, effective 6/6/74.]

WAC 296-155-655 General protection requirements.

(1) **Surface encumbrances**. You must remove surface encumbrances that are located so as to create a hazard to employees supported, as necessary, to safeguard employees.

(2) **Underground installations**.

(a) You must locate utility installations, such as sewer, telephone, fuel, electric, water lines, or any other underground installations that reasonably may be expected to be encountered during excavation work, prior to opening an excavation.

(b) You must contact utility companies or owners within established or customary local response times, advised of the proposed work, and asked to locate the underground utility installation prior to the start of actual excavation.

(c) When excavation operations approach the location of underground installations, you must determine the exact location of the installations by safe and acceptable means.

(d) While the excavation is open, you must protect underground installations, supported, or removed as necessary to safeguard employees.

(3) **Access and egress**.

(a) Structural ramps.

(i) Structural ramps that are used solely by employees as a means of access or egress from excavations must be designed by a competent person. Structural ramps used for access or egress of equipment must be designed by a competent person qualified in structural design, and must be constructed in accordance with the design.

(ii) Ramps and runways constructed of two or more structural members must have the structural members connected together to prevent displacement.

(iii) Structural members used for ramps and runways must be of uniform thickness.

(iv) Cleats or other appropriate means used to connect runway structural members must be attached to the bottom of the runway or must be attached in a manner to prevent tripping.

(v) Structural ramps used in lieu of steps must be provided with cleats or other surface treatments on the top surface to prevent slipping.

(b) Means of egress from trench excavations. A stairway, ladder, ramp or other safe means of egress must be located in trench excavations that are 4 feet (1.22 m) or more in depth so as to require no more than 25 feet (7.62 m) of lateral travel for employees.

(4) **Exposure to vehicular traffic**. You must provide employees exposed to vehicular traffic with, and they must wear high-visibility garments meeting the requirements of WAC 296-155-200, General requirements for personal protective equipment (PPE).

(5) **Exposure to falling loads**. You must not permit any employee underneath loads handled by lifting or digging equipment. You must require employees to stand away from any vehicle being loaded or unloaded to avoid being struck by any spillage or falling materials. Operators may remain in the cabs of vehicles being loaded or unloaded when the vehicles are equipped, in accordance with WAC 296-155-610 (2)(g), to provide adequate protection for the operator during loading and unloading operations.

(6) **Warning system for mobile equipment**. When mobile equipment is operated adjacent to an excavation, or when such equipment is required to approach the edge of an excavation, you must utilize a warning system such as barricades, hand or mechanical signals, or stop logs. If possible, the grade should be away from the excavation.

(7) **Hazardous atmospheres**.

(a) Testing and controls. In addition to the requirements set forth in parts B-1, C, and C-1 of this chapter (296-155 WAC) to prevent exposure to harmful levels of atmospheric contaminants and to assure acceptable atmospheric conditions, the following requirements apply:

(i) Where oxygen deficiency (atmospheres containing less than 19.5 percent oxygen) or a hazardous atmosphere exists or could reasonably be expected to exist, such as in excavations in landfill areas or excavations in areas where hazardous substances are stored nearby, you must test the atmospheres in the excavation before employees enter excavations greater than 4 feet (1.22 m) in depth.

(ii) You must take adequate precautions to prevent employee exposure to atmospheres containing less than 19.5 percent oxygen and other hazardous atmospheres. These precautions include providing proper respiratory protection or ventilation in accordance with chapter 296-842 WAC.

(iii) You must take adequate precaution such as providing ventilation, to prevent employee exposure to an atmosphere containing a concentration of a flammable gas in excess of 10 percent of the lower flammable limit of the gas.

(iv) When controls are used that are intended to reduce the level of atmospheric contaminants to acceptable levels, you must conduct testing as often as necessary to ensure that the atmosphere remains safe.

(b) Emergency rescue equipment.

(i) Emergency rescue equipment, such as breathing apparatus, a safety harness and line, or a basket stretcher, must be readily available where hazardous atmospheric conditions exist or may reasonably be expected to develop during work in an excavation. This equipment must be attended when in use.

(ii) Employees entering bell-bottom pier holes, or other similar deep and confined footing excavations, must wear a harness with a lifeline securely attached to it. The lifeline must be separate from any line used to handle materials, and must be individually attended at all times while the employee wearing the lifeline is in the excavation.

Note:	*See chapter 296-62 WAC, Part M for additional requirements applicable to confined space operations.*

(8) **Protection from hazards associated with water accumulation.**

(a) Employees must not work in excavations in which there is accumulated water, or in excavations in which water is accumulating, unless adequate precautions have been taken to protect employees against the hazards posed by water accumulation. The precautions necessary to protect employees adequately vary with each situation, but could include special support or shield systems to protect from cave-ins, water removal to control the level of accumulating water, or use of a safety harness and lifeline.

(b) If water is controlled or prevented from accumulating by the use of water removal equipment, the water removal equipment and operations must be monitored by a competent person to ensure proper operation.

(c) If excavation work interrupts the natural drainage of surface water (such as streams), you must use diversion ditches, dikes, or other suitable means to prevent surface water from entering the excavation and to provide adequate drainage of the area adjacent to the excavation. Excavations subject to runoff from heavy rains will require an inspection by a competent person and compliance with subdivisions (a) and (b) of this subsection.

(9) **Stability of adjacent structures**.

(a) Where the stability of adjoining buildings, walls, or other structures is endangered by excavation operations, you must provide support systems such as shoring, bracing, or underpinning to ensure the stability of such structures for the protection of employees.

(b) You must not permit excavation below the level of the base or footing of any foundation or retaining wall that could be reasonably expected to pose a hazard to employees except when:

(i) A support system, such as underpinning, is provided to ensure the safety of employees and the stability of the structure; or

(ii) The excavation is in stable rock; or

(iii) A registered professional engineer has approved the determination that the structure is sufficiently removed from the excavation so as to be unaffected by the excavation activity; or

(iv) A registered professional engineer has approved the determination that such excavation work will not pose a hazard to employees.

(c) Sidewalks, pavements, and appurtenant structure must not be undermined unless a support system or another method of protection is provided to protect employees from the possible collapse of such structures.

(10) **Protection of employees from loose rock or soil**.

(a) You must provide adequate protection to protect employees from loose rock or soil that could pose a hazard by falling or rolling from an excavation face. Such protection must consist of scaling to remove loose material; installation of protective barricades at intervals as necessary on the face to stop and contain falling material; or other means that provide equivalent protection.

(b) You must protect employees from excavated or other materials or equipment that could pose a hazard by falling or rolling into excavations. Protection must be provided by placing and keeping such materials or equipment at least two feet (.61 m) from the edge of excavations, or by the use of retaining devices that are sufficient to prevent materials or equipment from falling or rolling into excavations, or by a combination of both if necessary.

(11) **Inspections**.

(a) Daily inspections of excavations, the adjacent areas, and protective systems must be made by a competent person for evidence of a situation that could result in possible cave-ins, indications of failure of protective systems, hazardous atmospheres, or other hazardous conditions. An inspection must be conducted by the competent person prior to the start of work and as needed throughout the shift. Inspections must also be made after every rainstorm or other hazard increasing occurrence. These inspections are only required when employee exposure can be reasonably anticipated.

(b) Where the competent person finds evidence of a situation that could result in a possible cave-in, indications of failure of protective systems, hazardous atmospheres, or other hazardous conditions, you must remove exposed employees from the hazardous area until the necessary precautions have been taken to ensure their safety.

(12) **Fall protection**.

(a) You must provide walkways where employees or equipment are required or permitted to cross over excavations. You must provide guardrails which comply with chapter 296-155 WAC, Part C-1 where walkways are 4 feet or more above lower levels.

(b) You must provide adequate barrier physical protection at all remotely located excavations. You must barricade or cover all wells, pits, shafts, etc. Upon completion of exploration and similar operations, you must backfill temporary wells, pits, shafts, etc.

[Statutory Authority: RCW 49.17.010, .040, .050, and .060. 16-09-085 (Order 15-08), § 296-155-655, filed 04/19/16, effective, 05/20/16. Statutory Authority: RCW 49.17.010, .040, .050, and .060. 13-04-073 (Order 06-08), § 296-155-655, filed 02/04/13, effective 04/01/13. Statutory Authority: RCW 49.17.010, .040, .050, and .060. 05-03-093 (Order 04-41), § 296-155-655, filed 01/18/05, effective 03/01/05. Statutory Authority: RCW 49.17.010, .040, .050, and .060. 04-24-089 (Order 04-02), § 296-155-655, filed 12/01/04, effective 01/01/05. Statutory Authority: RCW 49.17.010, .040, .050. 99-17-094 (Order 99-01), § 296-155-655, filed 08/17/99, effective 12/1/99. Statutory Authority: RCW 49.17.010, .040, .050. 99-10 (Order 98-10), § 296-155-655, filed 05/04/99, effective 09/01/99. Statutory Authority: Chapter 49.17 RCW. 96-24-051, (Order 96-05), §296-155-655, filed 11/27/96, effective 02/01/97. 95-10-016, § 296-155-655, filed 4/25/95, effective 10/1/95. Statutory Authority: Chapter 49.17 RCW and RCW 49.17.040, [49.17].050 and [49.17].060. 92-22-067 (Order 92-06), § 296-155-655, filed 10/30/92, effective 12/8/92. Statutory Authority: Chapter 49.17 RCW. 91-03-044 (Order 90-18), § 296-155-655, filed 1/10/91, effective 2/12/91. Statutory Authority: RCW 49.17.040 and 49.17.050. 86-03-074 (Order 86-14), § 296-155-655, filed 1/21/86. Statutory Authority: RCW 49.17.040, 49.17.050 and 49.17.240. 81-13-053 (Order 81-9), § 296-155-655, filed 6/17/81; Order 76-29, § 296-155-655, filed 9/30/76; Order 74-26, § 296-155-655, filed 5/7/74, effective 6/6/74.]

WAC 296-155-657 Requirements for protective systems.

(1) **Protection of employees in excavations**.

(a) You must protect each employee in an excavation from cave-ins by an adequate protective system designed in accordance with subsections (2) or (3) of this section except when:

(i) Excavations are made entirely in stable rock; or

(ii) Excavations are less than 4 feet (1.22m) in depth and examination of the ground by a competent person provides no indication of a potential cave-in.

(b) Protective systems must have the capacity to resist without failure all loads that are intended or could reasonably be expected to be applied or transmitted to the system.

(2) **Design of sloping and benching systems**. The slopes and configurations of sloping and benching systems must be selected and constructed by the employer or employer's designee and must be in accordance with the requirements of subdivision (a); or, in the alternative, subdivision (b); or, in the alternative, subdivision (c); or, in the alternative, subdivision (d), as follows:

(a) Option 1-Allowable configurations and slopes.

(i) Excavations must be sloped at an angle not steeper than 1 1/2 horizontal to one vertical (34 degrees measured from the horizontal), unless the employer uses one of the other options listed below.

(ii) Slopes specified in item (i) of this subdivision, must be excavated to form configurations that are in accordance with the slopes shown for Type C soil in Appendix B to this part.

(b) Option 2-Determination of slopes and configurations using Appendices A and B. Maximum allowable slopes, and allowable configurations for sloping and benching systems, must be determined in accordance with the conditions and requirements set forth in appendices A and B to this part.

(c) Option 3-Designs using other tabulated data.

(i) Designs of sloping or benching systems must be selected from and be in accordance with tabulated data, such as tables and charts.

(ii) The tabulated data must be in written form and must include all of the following:

(A) Identification of the parameters that affect the selection of a sloping or benching system drawn from such data;

(B) Identification of the limits of use of the data, to include the magnitude and configuration of slopes determined to be safe;

(C) Explanatory information as may be necessary to aid the user in making a correct selection of a protective system from the data.

(iii) You must maintain at least one copy of the tabulated data which identifies the registered professional engineer who approved the data, at the job site during construction of the protective system. After that time the data may be stored off the job site, but you must make a copy of the data available to the director upon request.

(d) Option 4-Design by a registered professional engineer.

(i) Sloping and benching systems not utilizing Option 1 or Option 2 or Option 3 under subsection (2) of this section must be approved by a registered professional engineer.

(ii) Designs must be in written form and must include at least the following:

(A) The magnitude of the slopes that were determined to be safe for the particular project;

(B) The configurations that were determined to be safe for the particular project; and

(C) The identity of the registered professional engineer approving the design.

(iii) You must maintain at least one copy of the design at the job site while the slope is being constructed. After that time the design need not be at the job site, but you must maintain a copy available to the director upon request.

(3) **Design of support systems, shield systems, and other protective systems**. Designs of support systems, shield systems, and other protective systems must be selected and constructed by the employer or employer's designee and must be in accordance with the requirements of subdivision (a); or, in the alternative, subdivision (b); or, in the alternative, subdivision (c); or, in the alternative, subdivision (d) as follows:

(a) Option 1-Designs using appendices A, C, and D. Designs for timber shoring in trenches must be determined in accordance with the conditions and requirements set forth in appendices A and C to this part. Designs for aluminum hydraulic shoring must be in accordance with subdivision (b) of this subsection, but if manufacturer's tabulated data cannot be utilized, designs must be in accordance with appendix D.

(b) Option 2-Designs using manufacturer's tabulated data.

(i) Design of support systems, shield systems, or other protective systems that are drawn from manufacturer's tabulated data must be in accordance with all specifications, recommendations, and limitations issued or made by the manufacturer.

(ii) Deviation from the specifications, recommendations, and limitations issued or made by the manufacturer must only be allowed after the manufacturer issues specific written approval.

(iii) Manufacturer's specifications, recommendations, and limitations, and manufacturer's approval to deviate from the specifications, recommendations, and limitations must be in written form at the job site during construction of the protective system. After that time this data may be stored off the job site, but you must make a copy available to the director upon request.

(c) Option 3-Designs using other tabulated data.

(i) Designs of support systems, shield systems, or other protective systems must be selected from and be in accordance with tabulated data, such as tables and charts.

(ii) The tabulated data must be in written form and include all of the following:

(A) Identification of the parameters that affect the selection of a protective system drawn from such data;

(B) Identification of the limits of use of the data;

(C) Explanatory information as may be necessary to aid the user in making a correct selection of a protective system from the data.

(iii) You must maintain at least one copy of the tabulated data, which identifies the registered professional engineer who approved the data, at the job site during construction of the protective system. After that time the data may be stored off the job site, but you must make a copy of the data available to the director upon request.

(d) Option 4-Design by a registered professional engineer.

(i) Support systems, shield systems, and other protective systems not utilizing Option 1, Option 2 or Option 3, above, must be approved by a registered professional engineer.

(ii) Designs must be in written form and must include the following:

(A) A plan indicating the sizes, types, and configurations of the materials to be used in the protective system; and

(B) The identity of the registered professional engineer approving the design.

(iii) You must maintain at least one copy of the design at the job site during construction of the protective system. After that time, the design may be stored off the job site, but you must maintain a copy of the design available to the director upon request.

(4) **Materials and equipment.**

(a) Materials and equipment used for protective systems must be free from damage or defects that might impair their proper function.

(b) You must use and maintain manufactured materials and equipment used for protective systems in a manner that is consistent with the recommendations of the manufacturer, and in a manner that will prevent employee exposure to hazards.

(c) When material or equipment that is used for protective systems is damaged, a competent person must examine the material or equipment and evaluate its suitability for continued use. If the competent person cannot assure the material or equipment is able to support the intended loads or is otherwise suitable for safe use, then you must remove such material or equipment from service, and it must be evaluated and approved by a registered professional engineer before being returned to service.

(5) **Installation and removal of support.**

(a) General.

(i) Members of support systems must be securely connected together to prevent sliding, falling, kickouts, or other predictable failure.

(ii) You must install and remove support systems in a manner that protects employees from cave-ins, structural collapses, or from being struck by members of the support system.

(iii) You must not subject individual members of support systems to loads exceeding those which those members were designed to withstand.

(iv) Before temporary removal of individual members begins, you must take additional precautions to ensure the safety of employees, such as installing other structural members to carry the loads imposed on the support system.

(v) Removal must begin at, and progress from, the bottom of the excavation. You must release members slowly so as to note any indication of possible failure of the remaining members of the structure or possible cave-in of the sides of the excavation.

(vi) Backfilling must progress together with the removal of support systems from excavations.

(b) Additional requirements for support systems for trench excavations.

(i) Excavation of material to a level no greater than two feet (.61 m) below the bottom of the members of a support system is permitted, but only if the system is designed to resist the forces calculated for the full depth of the trench, and there are no indications while the trench is open of a possible loss of soil from behind or below the bottom of the support system.

(ii) Installation of a support system must be closely coordinated with the excavation of trenches.

(6) **Sloping and benching systems**. You must not permit employees to work on the faces of sloped or benched excavations at levels above other employees except when employees at the lower levels are adequately protected from the hazard of falling, rolling, or sliding material or equipment.

(7) **Shield systems.**

(a) General.

(i) You must not subject shield systems to loads exceeding those which the system was designed to withstand.

(ii) You must install shields in a manner to restrict lateral or other hazardous movement of the shield in the event of the application of sudden lateral loads.

(iii) You must protect employees from the hazard of cave-ins when entering or exiting the areas protected by shields.

(iv) You must not allow employees in shields when shields are being installed, removed, or moved vertically.

(b) Additional requirement for shield systems used in trench excavations. Excavations of earth material to a level not greater than two feet (.61 m) below the bottom of a shield is permitted, but only if the shield is designed to resist the forces calculated for the full depth of the trench, and there are no indications while the trench is open of a possible loss of soil from behind or below the bottom of the shield.

[Statutory Authority: RCW 49.17.010, .040, .050, and .060. 16-09-085 (Order 15-08), § 296-155-657, filed 04/19/16, effective, 05/20/16. Statutory Authority: Chapter 49.17 RCW and RCW 49.17.040, [49.17].050 and [49.17].060. 92-22-067 (Order 92-06), § 296-155-657, filed 10/30/92, effective 12/8/92. Statutory Authority: Chapter 49.17 RCW. 91-03-044 (Order 90-18), § 296-155-657, filed 1/10/91, effective 2/12/91.]

WAC 296-155-66103 Reserved.

[Statutory Authority: Chapter 49.17 RCW and RCW 49.17.040, [49.17].050 and [49.17].060. 92-22-067 (Order 92-06), § 296-155-66103, filed 10/30/92, effective 12/8/92. Statutory Authority: Chapter 49.17 RCW. 91-03-044 (Order 90-18), § 296-155-66103, filed 1/10/91, effective 2/12/91.]

WAC 296-155-66105 Reserved.

[Statutory Authority: Chapter 49.17 RCW and RCW 49.17.040, [49.17].050 and [49.17].060. 92-22-067 (Order 92-06), § 296-155-66105, filed 10/30/92, effective 12/8/92. Statutory Authority: Chapter 49.17 RCW. 91-03-044 (Order 90-18), § 296-155-66105, filed 1/10/91, effective 2/12/91.]

WAC 296-155-66109 Reserved.

[Statutory Authority: Chapter 49.17 RCW and RCW 49.17.040, [49.17].050 and [49.17].060. 92-22-067 (Order 92-06), § 296-155-66109, filed 10/30/92, effective 12/8/92. Statutory Authority: Chapter 49.17 RCW. 91-03-044 (Order 90-18), § 296-155-66109, filed 1/10/91, effective 2/12/91.]

WAC 296-155-664 Appendices.

[Statutory Authority: Chapter 49.17 RCW and RCW 49.17.040, [49.17].050 and [49.17].060. 92-22-067 (Order 92-06), § 296-155-664, filed 10/30/92, effective 12/8/92. Statutory Authority: Chapter 49.17 RCW. 91-03-044 (Order 90-18), § 296-155-664, filed 1/10/91, effective 2/12/91.]

WAC 296-155-66401 Appendix A-Soil classification.

(1) **Scope and application.**

(a) Scope. This appendix describes a method of classifying soil and rock deposits based on site and environmental conditions, and on the structure and composition of the earth deposits. The appendix contains definitions, sets forth requirements, and describes acceptable visual and manual tests for use in classifying soils.

(b) Application. This appendix applies when a sloping or benching system is designed in accordance with the requirements set forth in WAC 296-155-657 (2)(b) as a method of protection for employees from cave-ins. This appendix also applies when timber shoring for excavations is designed as a method of protection from cave-ins in accordance with appendix C to part N of this chapter, and when aluminum hydraulic shoring is designed in accordance with appendix D. This Appendix also applies if other protective systems are designed and selected for use from data prepared in accordance with the requirements set forth in WAC 296-155-657(3), and the use of the data is predicated on the use of the soil classification system set forth in this appendix.

(2) **Definitions.**

The definitions and examples given below are based on, in whole or in part, the following; American Society for Testing Materials (ASTM) Standards D653-85 and D2488; The Unified Soils Classification System, The U.S. Department of Agriculture (USDA) Textural Classification Scheme; and The National Bureau of Standards Report BSS-121.

Cemented soil. A soil in which the particles are held together by a chemical agent, such as calcium carbonate such that a hand-size sample cannot be crushed into powder or individual soil particles by finger pressure.

Cohesive soil. Clay (fine grained soil), or soil with a high clay content, which has cohesive strength. Cohesive soil does not crumble, can be excavated with vertical sideslopes, and is plastic when moist. Cohesive soil is hard to break up when dry, and exhibits significant cohesion when submerged. Cohesive soils include clayey silt, sandy clay, silty clay, clay and organic clay.

Dry soil. Soil that does not exhibit visible signs of moisture content.

Fissured. A soil material that has a tendency to break along definite planes of fracture with little resistance, or a material that exhibits open cracks, such as tension cracks, in an exposed surface.

Granular soil. Gravel, sand, or silt, (coarse grained soil) with little or no clay content. Granular soil has no cohesive strength. Some moist granular soils exhibit apparent cohesion. Granular soil cannot be molded when moist and crumbles easily when dry.

Layered system. Two or more distinctly different soil or rock types arranged in layers. Micaceous seams or weakened planes in rock or shale are considered layered.

Moist soil. A condition in which a soil looks and feels damp. Moist cohesive soil can easily be shaped into a ball and rolled into small diameter threads before crumbling. Moist granular soil that contains some cohesive material will exhibit signs of cohesion between particles.

Plastic. A property of a soil which allows the soil to be deformed or molded without cracking, or appreciable volume change.

Saturated soil. A soil in which the voids are filled with water. Saturation does not require flow. Saturation, or near saturation, is necessary for the proper use of instruments such as a pocket penetrometer or sheer vane.

Soil classification system. For the purpose of this part, a method of categorizing soil and rock deposits in a hierarchy of Stable Rock, Type A, Type B, and Type C, in decreasing order of stability. The categories are determined based on an analysis of the properties and performance characteristics of the deposits and the environmental conditions of exposure.

Stable rock. Natural solid mineral matter that can be excavated with vertical sides and remain intact while exposed.

Submerged soil. Soil which is underwater or is free seeping.

Type A. Cohesive soils with an unconfined compressive strength of 1.5 ton per square foot (tsf) (144 kPa) or greater. Examples of cohesive soils are: Clay, silty clay, sandy clay, clay loam and, in some cases, silty clay loam and sandy clay loam. Cemented soils such as caliche and hardpan are also considered Type A. No soil is Type A if:

- The soil is fissured; or
- The soil is subject to vibration from heavy traffic, pile driving, or similar effects; or
- The soil has been previously disturbed; or
- The soil is part of a sloped, layered system where the layers dip into the excavation on a slope of 4 horizontal to 1 vertical (4H.1V) or greater; or
- The material is subject to other factors that would require it to be classified as a less stable material.

Type B.

- Cohesive soil with an unconfined compressive strength greater than 0.5 tsf (48 kPa) but less than 1.5 tsf (144 kPa): or
- Granular cohesionless soils including: Angular gravel (similar to crushed rock), silt, silt loam, sandy loam and, in some cases, silty clay loam and sandy clay loam.
- Previously disturbed soils except those which would otherwise be classed as Type C soil.
- Soil that meets the unconfined compressive strength or cementation requirements for Type A, but is fissured or subject to vibration: or
- Dry rock that is not stable: or
- Material that is part of a sloped, layered system where the layers dip into the excavation on a slope less steep than 4 horizontal to 1 vertical (4H.1V), but only if the material would otherwise be classified as Type B.

Type C.

- Cohesive soil with an unconfined compressive strength of 0.5 tsf (48 kPa) or less: or
- Granular soils including gravel, sand, and loamy sand: or
- Submerged soil or soil from which water is freely seeping: or
- Submerged rock that is not stable, or
- Material in a sloped, layered system where the layers dip into the excavation or a slope of 4 horizontal to 1 vertical (4H.1V) or steeper.

Unconfined compressive strength. The load per unit area at which a soil will fail in compression. It can be determined by laboratory testing, or estimated in the field using a pocket penetrometer, by thumb penetration tests, and other methods.

Wet soil. Soil that contains significantly more moisture than moist soil, but in such a range of values that cohesive material will slump or begin to flow when vibrated. Granular material that would exhibit cohesive properties when moist will lose those cohesive properties when wet.

(3) **Requirements**.

(a) Classification of soil and rock deposits. Each soil and rock deposit must be classified by a competent person as Stable Rock, Type A, Type B, or Type C in accordance with the definitions set forth in subsection (2) of this section.

(b) Basis of classification. The classification of the deposits shall be made based on the results of at least one visual and at least one manual analysis. Such analyses must be conducted by a competent person using tests in subsection (4) of this section or in other recognized methods of soil classification and testing such as those adopted by the American Society for Testing Materials, or the U.S. Department of Agriculture textural classification system.

(c) Visual and manual analyses. The visual and manual analyses, such as those noted as being acceptable in subsection (4) of this section, must be designed and conducted to provide sufficient quantitative and qualitative information as may be necessary to identify properly the properties, factors, and conditions affecting the classification of the deposits.

(d) Layered systems. In a layered system, the system must be classified in accordance with its weakest layer. However, each layer may be classified individually where a more stable layer lies under a less stable layer.

(e) Reclassification. If, after classifying a deposit, the properties, factors, or conditions affecting its classification change in any way, the changes must be evaluated by a competent person. The deposit shall be reclassified as necessary to reflect the changed circumstances.

(4) **Acceptable visual and manual tests.**

(a) Visual tests. Visual analysis is conducted to determine qualitative information regarding the excavation site in general, the soil adjacent to the excavation, the soil forming the sides of the open excavation, and the soil taken as samples from excavated material.

(i) Observe samples of soil that are excavated and soil in the sides of the excavation. Estimate the range of particle sizes and the relative amounts of the particle sizes. Soil that is primarily composed of fine-grained material is cohesive material. Soil composed primarily of coarse-grained sand or gravel is granular material.

(ii) Observe soil as it is excavated. Soil that remains in clumps when excavated is cohesive. Soil that breaks up easily and does not stay in clumps is granular.

(iii) Observe the side of the opened excavation and the surface area adjacent to the excavation. Crack-like openings such as tension cracks could indicate fissured material. If chunks of soil spall off a vertical side, the soil could be fissured. Small spalls are evidence of moving ground and are indications of potentially hazardous situations.

(iv) Observe the area adjacent to the excavation and the excavation itself for evidence of existing utility and other underground structures, and to identify previously disturbed soil.

(v) Observe the opened side of the excavation to identify layered systems. Examine layered systems to identify if the layers slope toward the excavation. Estimate the degree of slope of the layers.

(vi) Observe the area adjacent to the excavation and sides of the open excavation for evidence of surface water, water seeping from the sides of the excavation, or the location of the level of the water table.

(vii) Observe the area adjacent to the excavation and the area within the excavation for sources of vibration that may affect the stability of the excavation face.

(b) Manual tests. Manual analysis of soil samples is conducted to determine quantitative as well as qualitative properties of soil and to provide more information in order to classify soil properly.

(i) Plasticity. Mold a moist or wet sample of soil into a ball and attempt to roll it into threads as thin as 1/8-inch in diameter. Cohesive material can be successfully rolled into threads without crumbling. For example, if at least a two inch (50 mm) length of 1/8-inch thread can be held on one end without tearing, the soil is cohesive.

(ii) Dry strength. If the soil is dry and crumbles on its own or with moderate pressure into individual grains or fine powder, it is granular (any combination of gravel, sand, or silt). If the soil is dry and falls into clumps which break up into smaller clumps, but the smaller clumps can only be broken up with difficulty, it may be clay in any combination with gravel, sand or silt. If the dry soil breaks into clumps which do not break up into small clumps and which can only be broken with difficulty, and there is no visual indication the soil is fissured, the soil may be considered unfissured.

(iii) Thumb penetration. The thumb penetration test can be used to estimate the unconfined compressive strength of cohesive soils. (This test is based on the thumb penetration test described in American Society for Testing and Materials (ASTM) Standard designation D2488-"Standard Recommended Practice for Description of Soils (Visual-Manual Procedure).") Type A soils with an unconfined compressive strength of 1.5 tsf can be readily indented by the thumb; however, they can be and penetrated by the thumb only with very great effort. Type C soils with an unconfined compressive strength of 0.5 tsf can be easily penetrated several inches by the thumb, and can be molded by light finger pressure. This test should be conducted on an undisturbed soil sample, such as a large clump of spoil, as soon as practicable after excavation to keep to a minimum the effects of exposure to drying influences. If the excavation is later exposed to wetting influences (rain, flooding), the classification of the soil must be changed accordingly.

(iv) Other strength tests. Estimates of unconfined compressive strength of soils can also be obtained by use of a pocket penetrometer or by using a hand-operated shear vane.

(v) Drying test. The basic purpose of the drying test is to differentiate between cohesive material with fissures, unfissured cohesive material, and granular material. The procedure for the drying test involves drying a sample of soil that is approximately 1 inch thick (2.54 cm) and 6 inches (15.24 cm) in diameter until it is thoroughly dry:

(A) If the sample develops cracks as it dries, significant fissures are indicated.

(B) Samples that dry without cracking are to be broken by hand. If considerable force is necessary to break a sample, the soil has significant cohesive material content. The soil can be classified as a unfissured cohesive material and the unconfined compressive strength should be determined.

(C) If a sample breaks easily by hand, it is either a fissured cohesive material or a granular material. To distinguish between the two, pulverize the dried clumps of the sample by hand or by stepping on them. If the clumps do not pulverize easily, the material is cohesive with fissures. If they pulverize easily into very small fragments, the material is granular.

[Statutory Authority: RCW 49.17.010, .040, .050, and .060. 16-09-085 (Order 15-08), § 296-155-66401, filed 04/19/16, effective, 05/20/16. Statutory Authority: Chapter 49.17 RCW and RCW 49.17.040, [49.17].050 and [49.17].060. 92-22-067 (Order 92-06), § 296-155-66401, filed 10/30/92, effective 12/8/92.]

WAC 296-155-66403 Appendix B-Sloping and benching.

(1) **Scope and application**. This appendix contains specifications for sloping and benching when used as methods of protecting employees working in excavations from cave-ins. The requirements of this appendix apply when the design of sloping and benching protective systems is to be performed in accordance with the requirements set forth in WAC 296-155-657 (2)(b).

(2) **Definitions.**

Actual slope. The slope to which an excavation face is excavated.

Distress. Soil that is in a condition where a cave-in is imminent or is likely to occur. Distress is evidenced by such phenomena as the development of fissures in the face of or adjacent to an open excavation; the subsidence of the edge of an excavation; the slumping of material from the face or the bulging or heaving of material from the bottom of an excavation; the spalling of material from the face of an excavation; and ravelling, i.e., small amounts of material such as pebbles or little clumps of material suddenly separating from the face of an excavation and trickling or rolling down into the excavation.

Maximum allowable slope. The steepest incline of an excavation face that is acceptable for the most favorable site conditions as protection against cave-ins, and is expressed as the ratio of horizontal distance to vertical rise (H:V).

(3) **Requirements.**

(a) Soil classification. Soil and rock deposits must be classified in accordance with appendix A of this Part.

(b) Maximum allowable slope. The maximum allowable slope for a soil or rock deposit must be determined from Table N-1 of this appendix.

(c) Actual slope.

(i) The actual slope must not be steeper than the maximum allowable slope.

(ii) The actual slope must be less steep than the maximum allowable slope, when there are signs of distress. If that situation occurs, the slope must be cut back to an actual slope which is at least 1/2 horizontal to one vertical (1/2H:1V) less steep than the maximum allowable slope.

(iii) When surcharge loads from stored material or equipment, operating equipment, or traffic are present, a competent person must determine the degree to which the actual slope must be reduced below the maximum allowable slope, and must ensure that such reduction is achieved. Surcharge loads from adjacent structures shall be evaluated in accordance with WAC 296-155-655(9).

(d) Configurations. Configurations of sloping and benching systems must be in accordance with Figures N-1 through N-18.

Table N-1

SOIL OR ROCK TYPE	MAXIMUM ALLOWABLE SLOPES (H:V) [1] FOR EXCAVATIONS LESS THAN 20 FEET DEEP [2]
STABLE ROCK	VERTICAL (90°)
TYPE A	3/4:1 (53°)
TYPE B	1:1 (45°)
TYPE C	1 1/2:1 (34°)

NOTES

[1]: Numbers shown in parentheses next to maximum allowable slopes are angles expressed in degrees from the horizontal. Angles have been rounded off.

[2]: Sloping or benching for excavations greater than 20 feet deep shall be designed by a registered professional engineer.

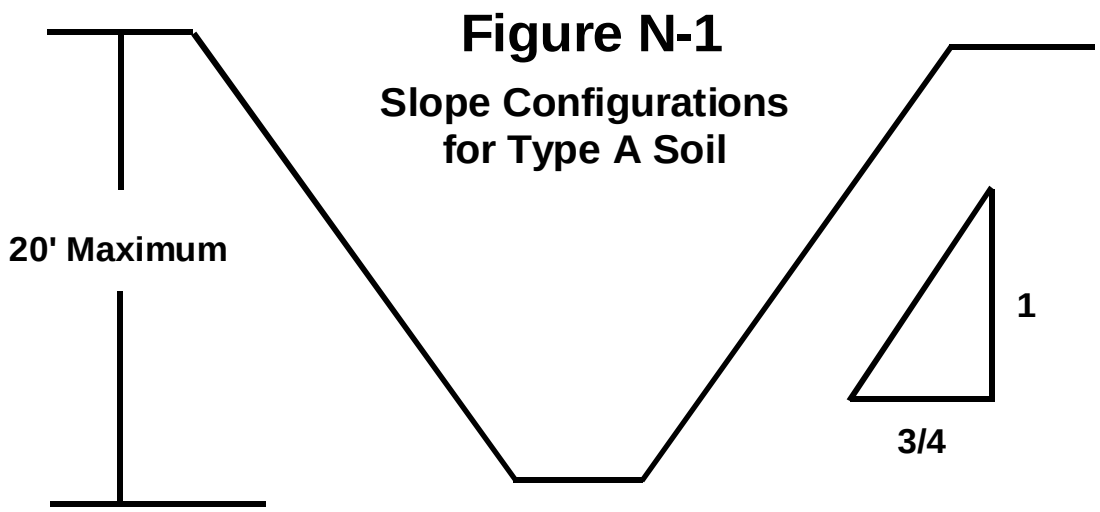

Simple Slope - General

All simple slope excavations 20 feet or less in depth must have a maximum allowable slope of 3/4:1.

WAC 296-155-66403 (Cont.)

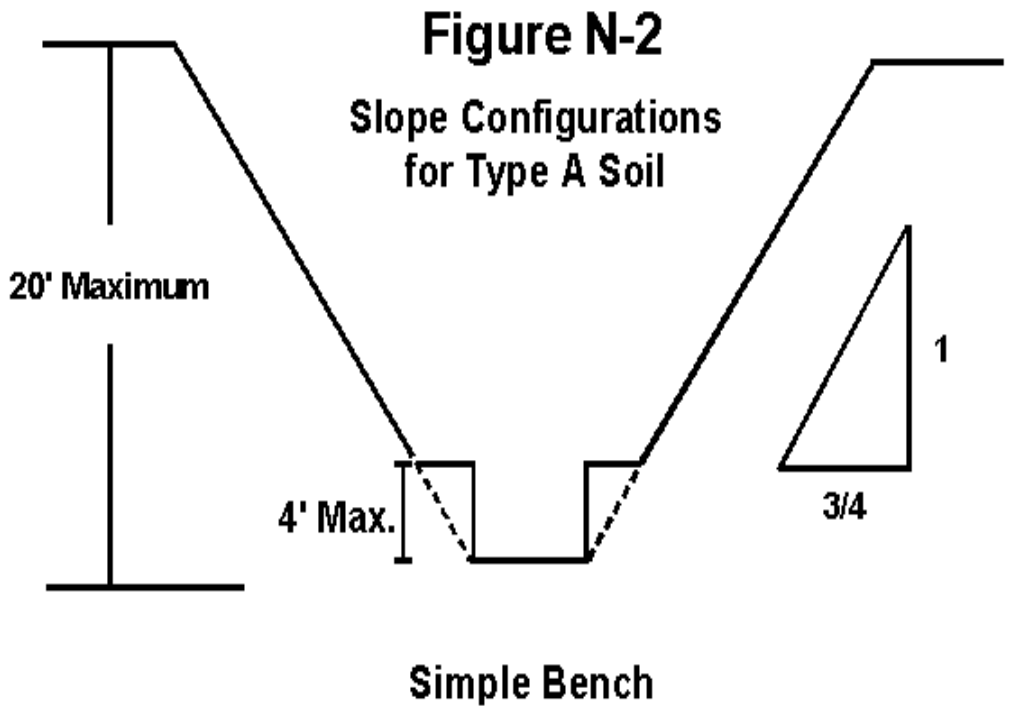

All benched excavations 20 feet or less in depth must have a maximum allowable slope of 3/4:1 and maximum bench dimensions of 4 feet.

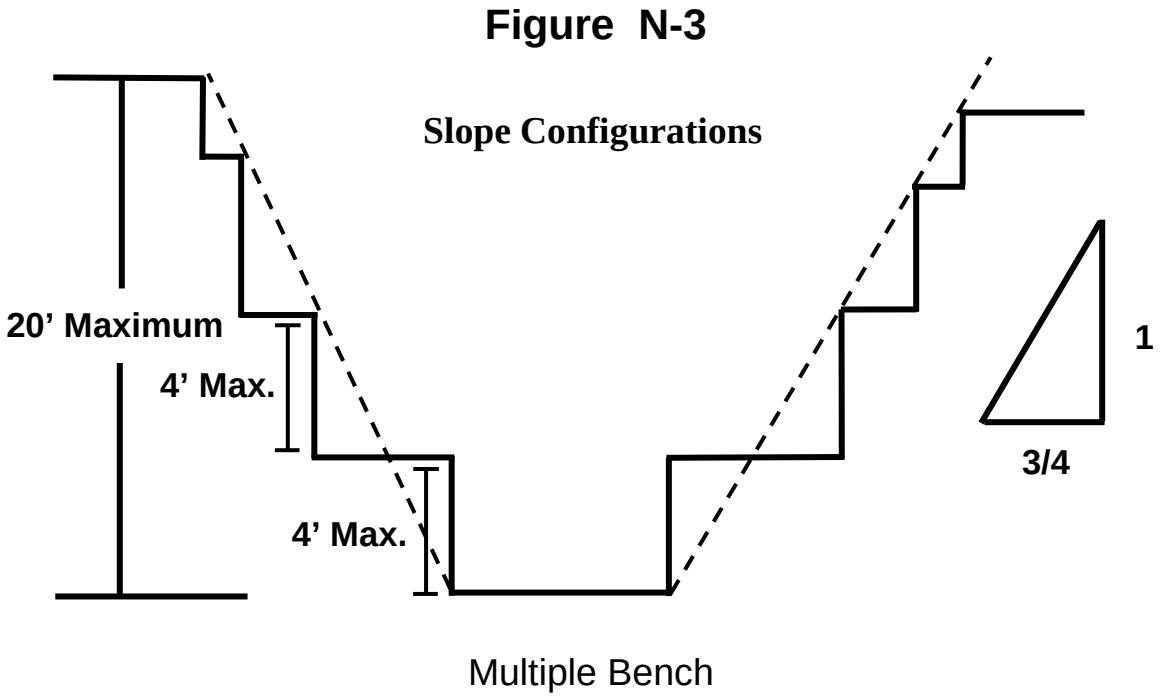

All benched excavations 20 feet or less in depth must have a maximum allowable slope of 3/4:1 and maximum bench dimensions of 4 feet.

WAC 296-155-66403 (Cont.)

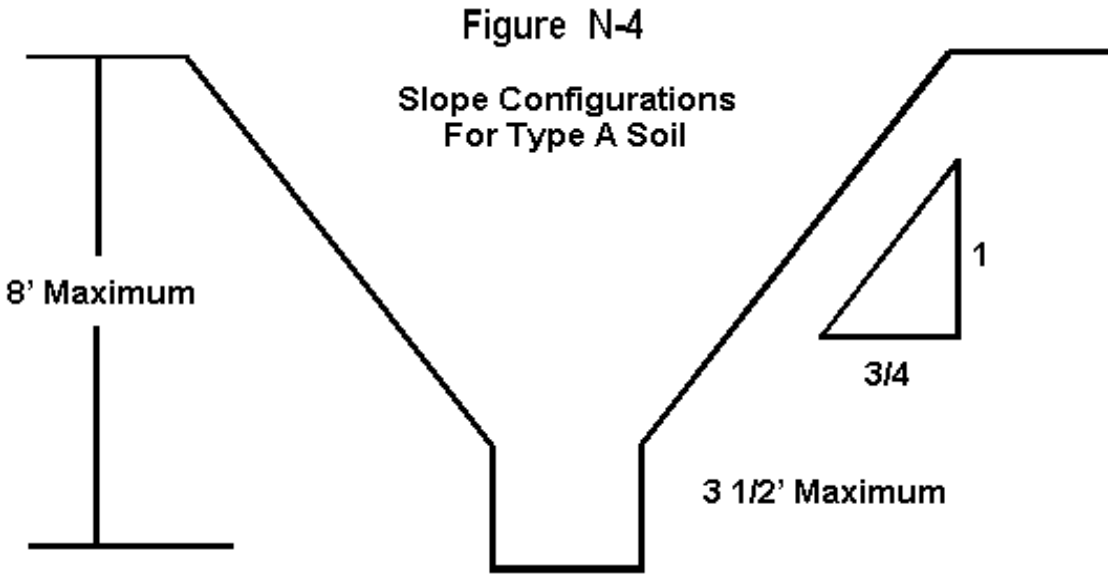

Unsupported Vertically Sided Lower Portion
Maximum 8 Feet in Depth

All excavations 8 feet or less in depth which have unsupported vertically sided lower portions must have a maximum vertical side of 3 ½ feet.

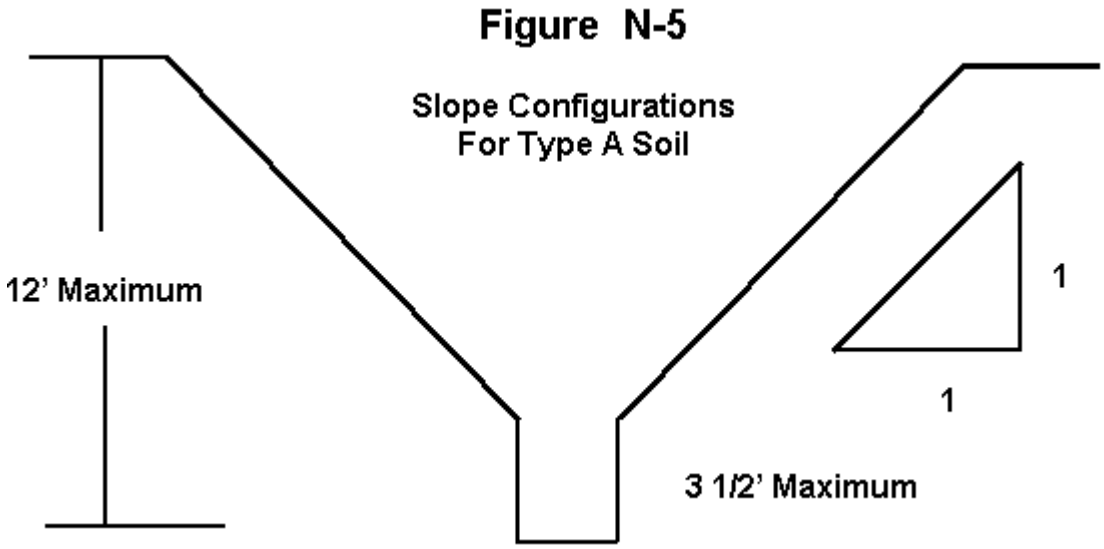

Unsupported Vertically Sided Lower Portion
Maximum 12 Feet in Depth

All excavations more than 8 feet but not more than 12 feet in depth which have unsupported vertically sided lower portions shall have a maximum allowable slope of 1:1 and vertical side of 3 ½ feet.

WAC 296-155-66403 (Cont.)

Figure N-6

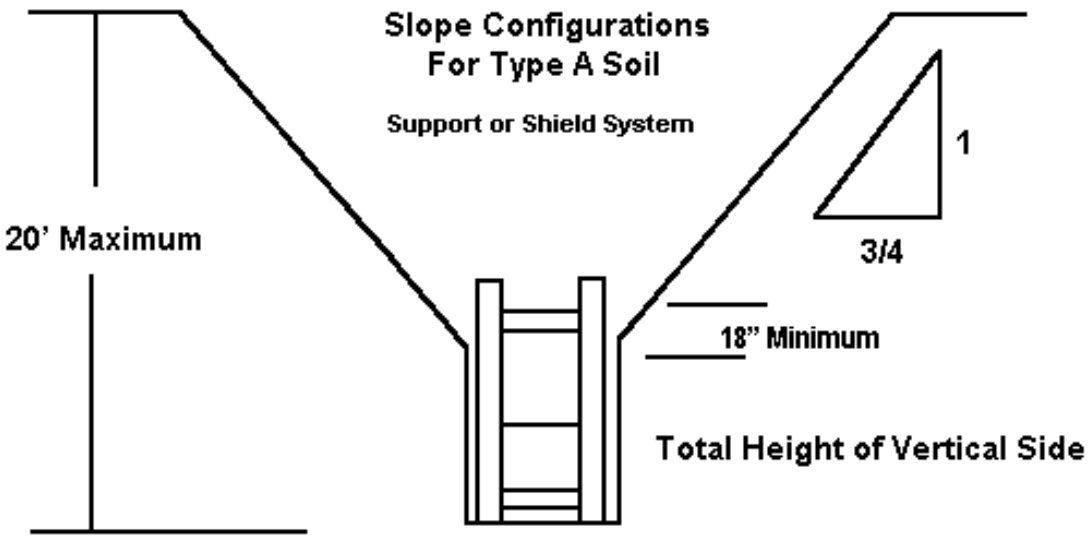

Unsupported Vertically Sided Lower Portion
Maximum 20 Feet in Depth

All excavations 20 feet or less in depth which have vertically sided lower portions that are supported or shielded shall have a maximum allowable slope of 3/4:1. The support or shield system must extend at least 18 inches above the top of the vertical side. All other simple slope, compound slope and vertically sided lower portion excavations must be in accordance with options permitted under WAC 296-155-657(2).

Figure N-7

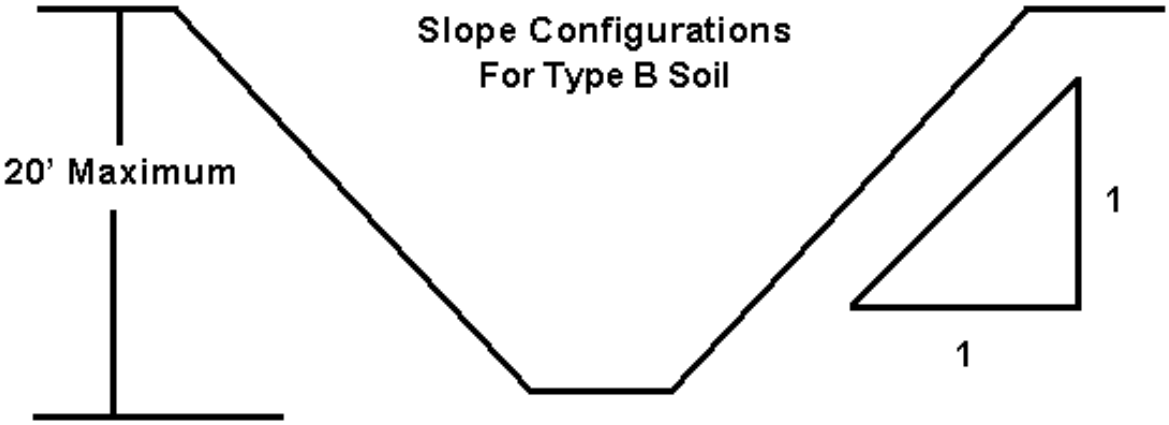

Simple slope

All simple excavations 20 feet or less in depth must have a maximum allowable slope of 1:1.

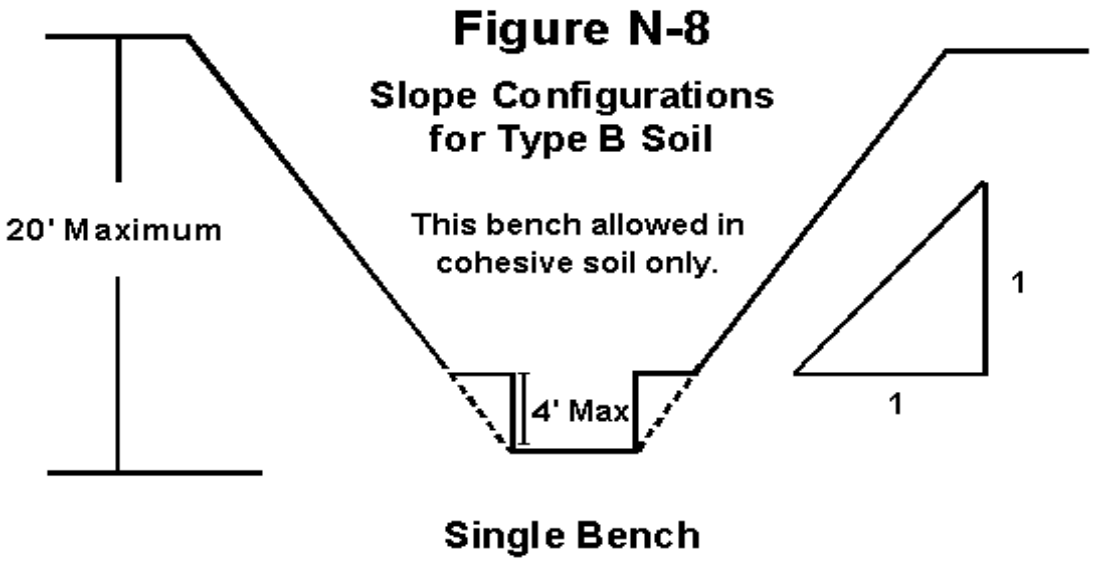

All excavations 20 feet or less in depth must have a maximum allowable slope of 1:1 and maximum bench dimensions of 4 feet.

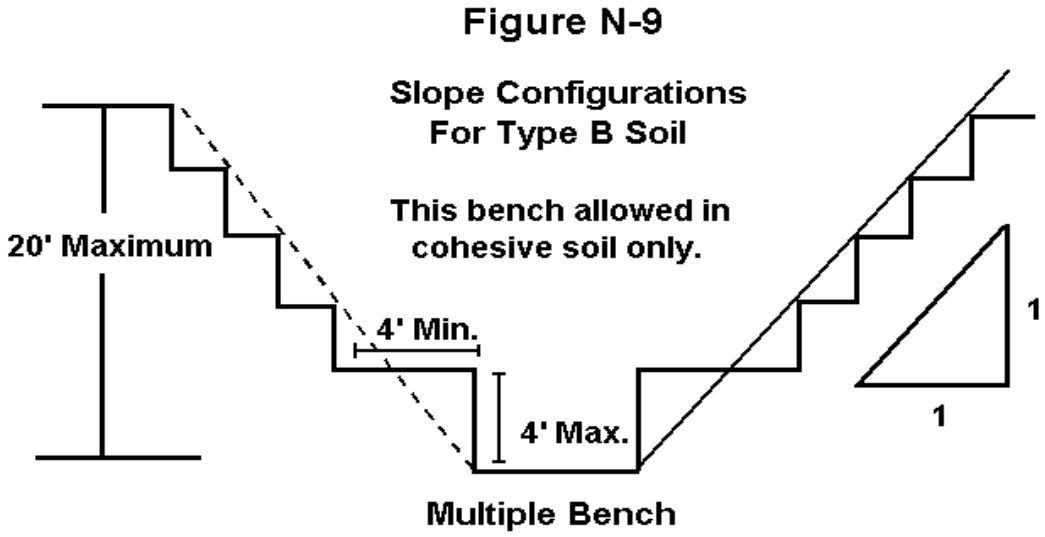

All excavations 20 feet or less in depth must have a maximum allowable slope of 1:1 and maximum bench dimensions of 4 feet.

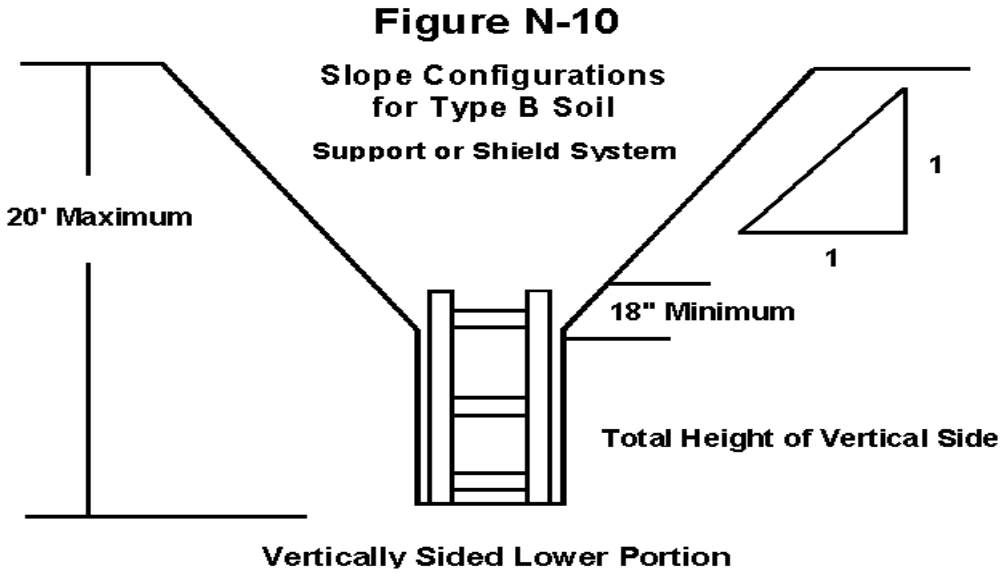

All excavations 20 feet or less in depth which have vertically sided lower portions must be shielded or supported to a height at least 18 inches above the top of the vertical side. All such excavations must have a maximum allowable slope of 1:1. All other simple slope, compound slope and vertically sided lower portion excavations must be in accordance with options permitted under WAC 296-155-657(2).

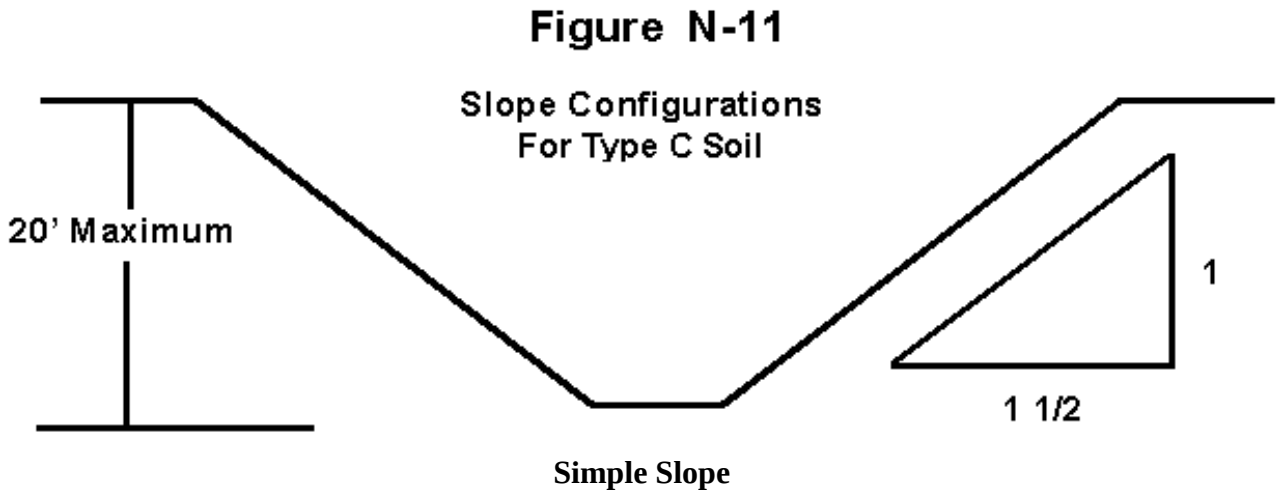

All simple slope excavations 20 feet or less in depth must have a maximum allowable slope of 1 1/2:1.

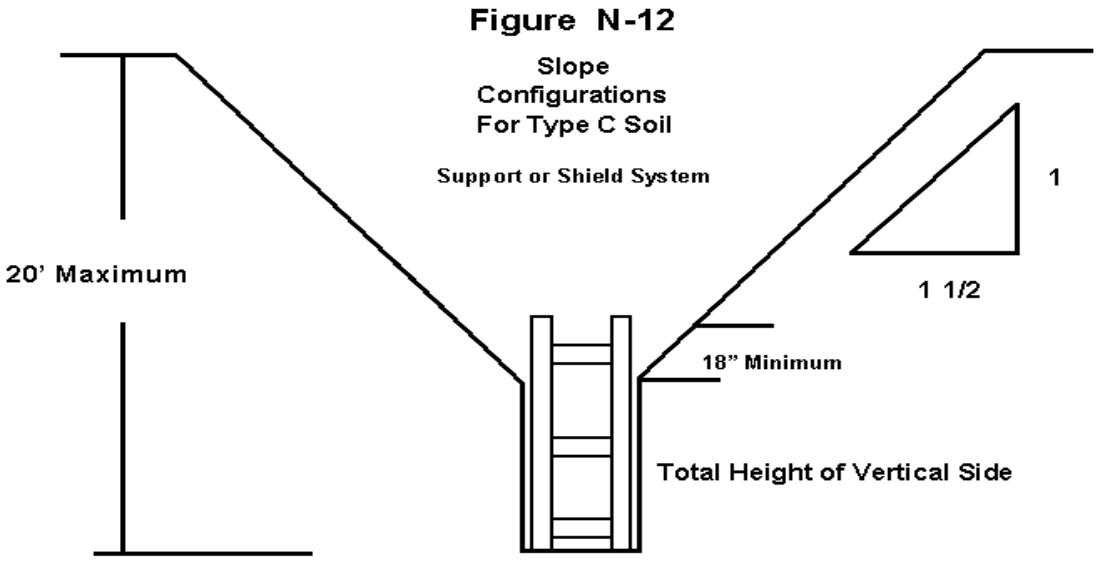

Vertically Sided Lower Portion

All excavations 20 feet or less in depth which have vertically sided lower portions must be shielded or supported to a height at least 18 inches above the top of the vertical side. All such excavations must have a maximum allowable slope of 1 1/2:1. All other simple slope, compound slope and vertically sided lower portion excavations must be in accordance with options permitted under WAC 296-155-657(2).

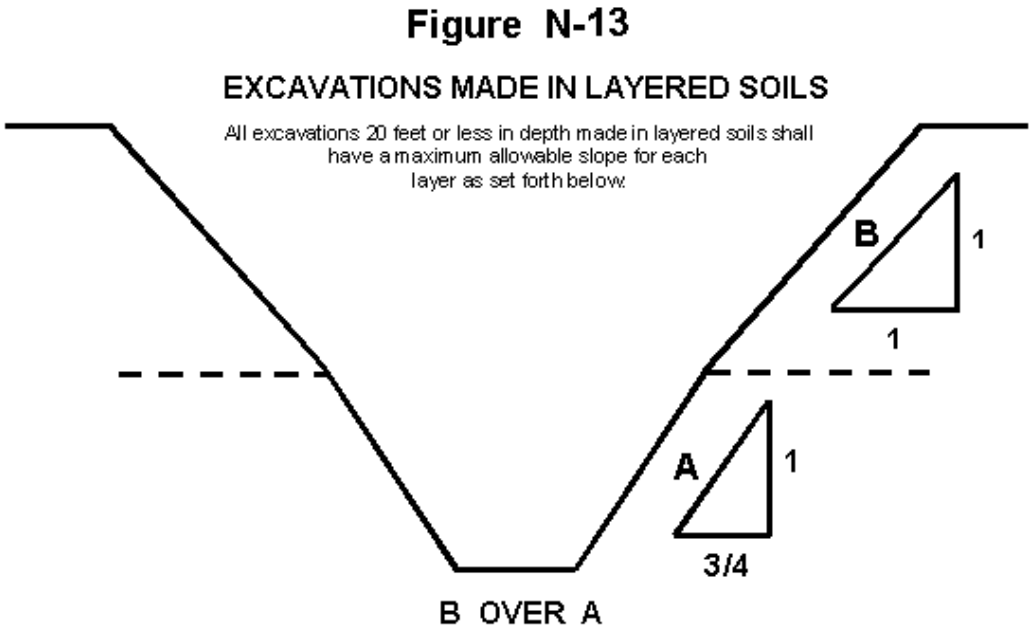

Figure N-14

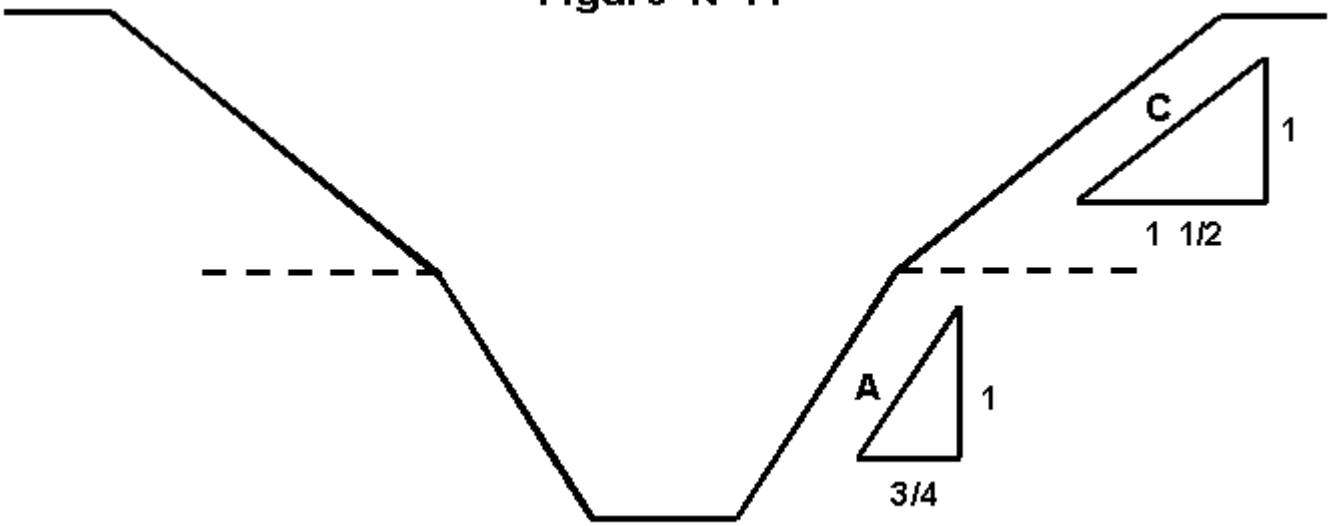

C OVER A

Figure N-15

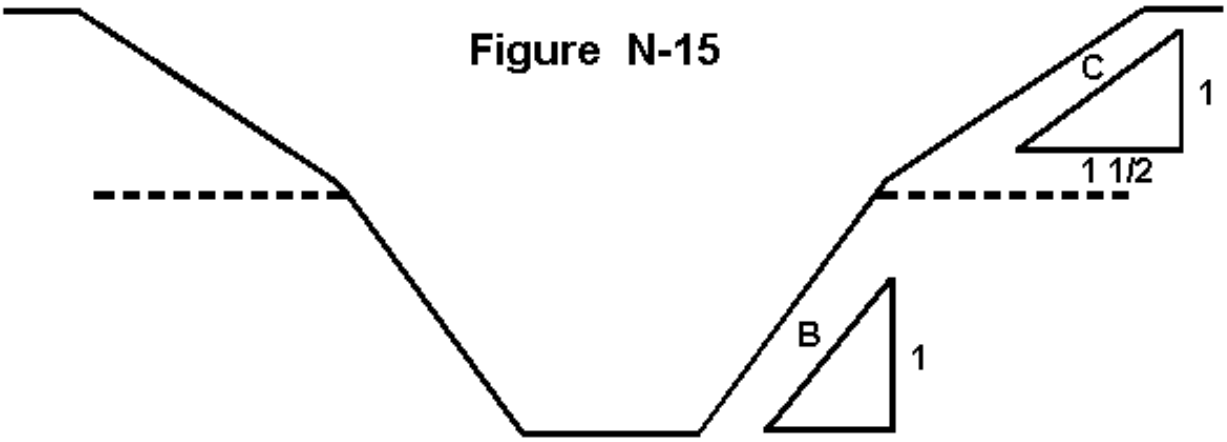

C OVER B

Figure N-16

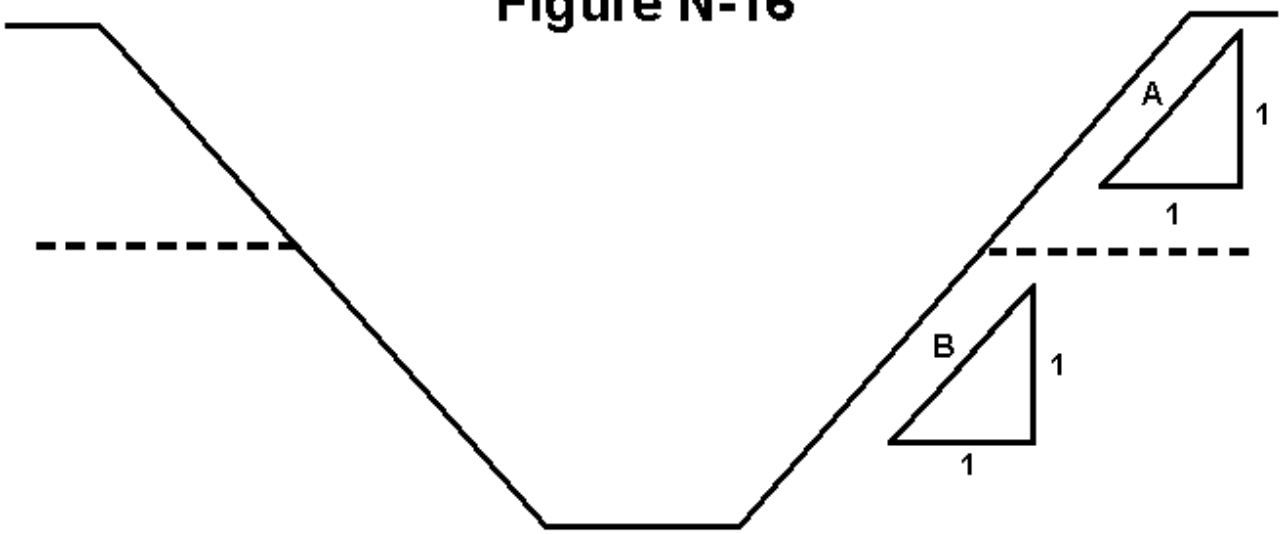

A OVER B

Figure N-17

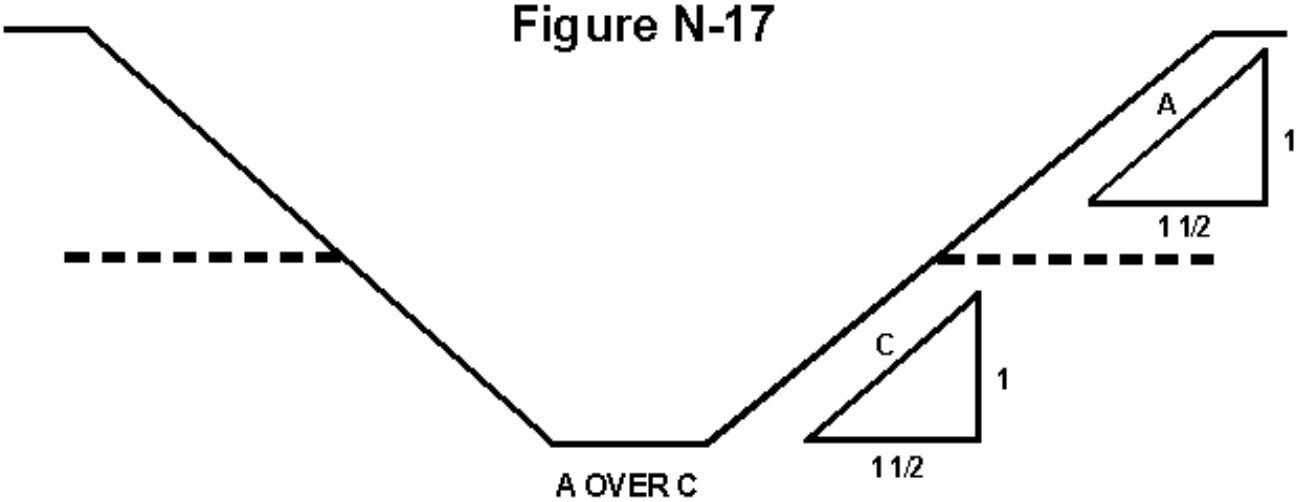

A OVER C

Figure N-18

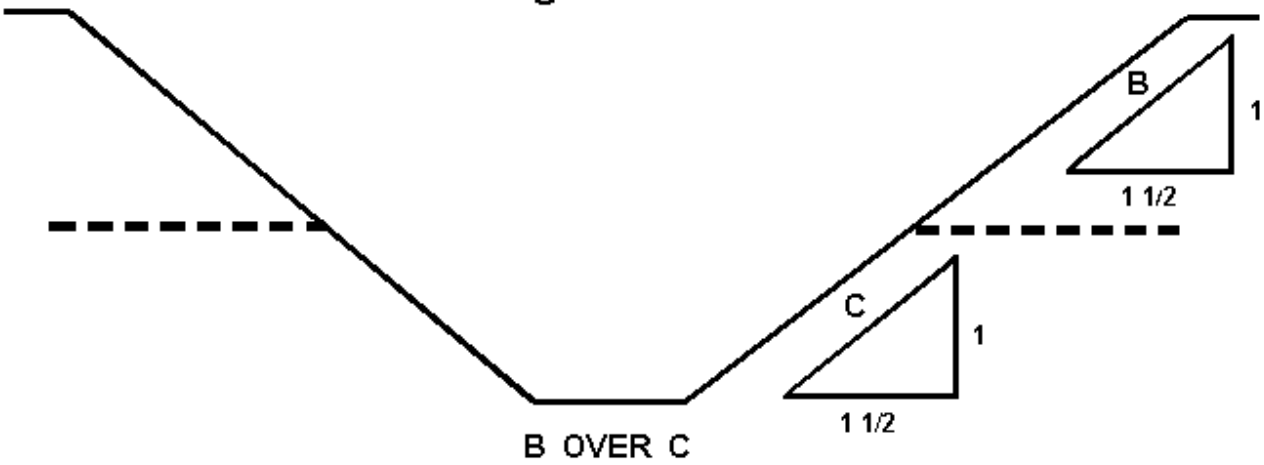

[Statutory Authority: RCW 49.17.010, .040, .050, and .060. 16-09-085 (Order 15-08), § 296-155-66403 filed 04/19/16, effective, 05/20/16. Statutory Authority: RCW 49.17.010, .040, .050. 99-17-094 (Order 99-01), § 296-155-66403, filed 08/17/99, effective 12/01/99. Statutory Authority: Chapter 49.17 RCW and RCW 49.17.040, [49.17].050 and [49.17].060. 92-22-067 (Order 92-06), § 296-155-66403, filed 10/30/92, effective 2/8/92.]

WAC 296-155-66405 Appendix C-Timber shoring for trenches.

(1) **Scope**. This appendix contains information that can be used when timber shoring is provided as a method of protection from cave-ins in trenches that do not exceed 20 feet (6.1 m) in depth. This appendix must be used when design of timber shoring protective systems is to be performed in accordance with WAC 296-155-657 (3)(a). Other timber shoring configurations; other systems of support such as hydraulic and pneumatic systems; and other protective systems such as sloping, benching, shielding, and freezing systems must be designed in accordance with the requirements set forth in WAC 296-155-657 (2) and (3).

(2) **Soil classification**. In order to use the data presented in this appendix, the soil type or types in which the excavation is made must first be determined using the soil classification method set forth in appendix A of this part.

(3) **Presentation of information**. Information is presented in several forms as follows:

(a) Information is presented in tabular form in Tables N-2 through N-7 following subsection (7) of this appendix. Each table presents the minimum sizes of timber members to use in a shoring system, and each table contains data only for the particular soil type in which the excavation or portion of the excavation is made. The data are arranged to allow the user the flexibility to select from among several acceptable configurations of members based on varying the horizontal spacing of the crossbraces. Stable rock is exempt from shoring requirements and therefore, no data are presented for this condition.

(b) Information concerning the basis of the tabular data and the limitations of the data is presented in subsection (4) of this appendix, and on the tables themselves.

(c) Information explaining the use of the tabular data is presented in subsection (5) of this appendix.

(d) Information illustrating the use of the tabular data is presented in subsection (6) of this appendix.

(e) Miscellaneous notations regarding Tables N-2 through N-7 are presented in subsection (7) of this Appendix.

(4) **Basis and limitations of the data.**

(a) Dimensions of timber members.

(i) The sizes of the timber members listed in Tables N-2 through N-7 are taken from the National Bureau of Standards (NBS) report, “Recommended Technical Provisions for Construction Practice in Shoring and Sloping of Trenches and Excavations.” In addition, where NBS did not recommend specific sizes of members, member sizes are based on an analysis of the sizes required for use by existing codes and on empirical practice.

(ii) The required dimensions of the members listed in Tables N-2, N-3, and N-4 refer to actual dimensions and not nominal dimensions of the timber. Employers wanting to use nominal size shoring are directed to Tables N-5, N-6, and N-7, or have this choice under WAC 296-155-657 (3)(c), and are referred to The Corps of Engineers, The Bureau of Reclamation or data from other acceptable sources.

(b) Limitation of application.

(i) It is not intended that the timber shoring specification apply to every situation that may be experienced in the field. These data were developed to apply to the situations that are most commonly experienced in current trenching practice. Shoring systems for use in situations that are not covered by the data in this appendix must be designed as specified in WAC 296-155-657(3).

(ii) When any of the following conditions are present, the members specified in the tables are not considered adequate. Either an alternate timber shoring system must be designed or another type of protective system designed in accordance with WAC 296-155-657.

(A) When loads imposed by structures or by stored material adjacent to the trench weigh in excess of the load imposed by a two-foot soil surcharge. The term **"adjacent"** as used here means the area within a horizontal distance from the edge of the trench equal to the depth of the trench.

(B) When vertical loads imposed on cross braces exceed a 240-pound gravity load distributed on a one-foot section of the center of the crossbrace.

(C) When surcharge loads are present from equipment weighing in excess of 20,000 pounds.

(D) When only the lower portion of a trench is shored and the remaining portion of the trench is sloped or benched unless: The sloped portion is sloped at an angle less steep than three horizontal to one vertical; or the members are selected from the tables for use at a depth which is determined from the top of the overall trench, and not from the toe of the sloped portion.

(5) **Use of Tables**. The members of the shoring system that are to be selected using this information are the cross braces, the uprights, and the wales, where wales are required. Minimum sizes of members are specified for use in different types of soil. There are 6 tables of information, two for each soil type. The soil type must first be determined in accordance with the soil classification system described in appendix A of this Part. Using the appropriate table, the selection of the size and spacing of the members is then made. The selection is based on the depth and width of the trench where the members are to be installed and, in most instances, the selection is also based on the horizontal spacing of the crossbraces. Instances where a choice of horizontal spacing of crossbracing is available, the horizontal spacing of the crossbraces must be chosen by the user before the size of any member can be determined. When the soil type, the width and depth of the trench, and the horizontal spacing of the crossbraces are known, the size and vertical spacing of the crossbraces, the size and vertical spacing of the wales, and the size and horizontal spacing of the uprights can be read from the appropriate table.

(6) **Examples to illustrate the use of Tables N-2 through N-4.**

(a) Example 1.

A trench dug in Type A soil is 13 feet deep and 5 feet wide.
From Table N-2, for acceptable arrangements of timber can be used.

Arrangement #1

Space 4x4 crossbraces at six feet horizontally and 4 feet vertically.
Wales are not required.
Space 3x8 uprights at 6 feet horizontally. This arrangement is commonly called "skip shoring."

Arrangement #2

Space 4x6 crossbraces at 8 feet horizontally and four feet vertically.
Space 8x8 wales at 4 feet vertically.
Space 2x6 uprights at 4 feet horizontally.

Arrangement #3

Space 6x6 crossbraces at 10 feet horizontally and 4 feet vertically.
Space 8x10 wales at 4 feet vertically.
Space 2x6 uprights at 5 feet horizontally.

Arrangement #4

Space 6x6 crossbraces at 12 feet horizontally and 4 feet vertically.
Space 10x10 wales at 4 feet vertically.
Space 3x8 uprights at 6 feet horizontally.

(b) Example 2.

A trench dug in Type B soil in 13 feet deep and 5 feet wide.
From Table N-3 three acceptable arrangements of members are listed.

Arrangement #1

Space 6x6 crossbraces at 6 feet horizontally and 5 feet vertically.
Space 8x8 wales at 5feet vertically.
Space 2x6 uprights at two feet horizontally.

Arrangement #2

Space 6x8 crossbraces at 8 feet horizontally and 5 feet vertically.
Space 10x10 wales at 5 feet vertically.
Space 2x6 uprights at two feet horizontally.

Arrangement #3

Space 8x8 crossbraces at 10 feet horizontally and 5 feet vertically.
Space 10x12 wales at 5 feet vertically.
Space 2x6 uprights at two feet vertically.

(c) Example 3.

A trench dug Type C soil is 13 feet deep and 5 feet wide.
From Table N-4 two acceptable arrangements of members can be used.

Arrangement #1

Space 8x8 crossbraces at six feet horizontally and 5 feet vertically.
Space 10x12 wales at 5 feet vertically.
Position 2x6 uprights as closely together as possible.
If water must be retained use special tongue and groove uprights to form tight sheeting.

Arrangement #2

Space 8x10 crossbraces at 8 feet horizontally and 5 feet vertically.
Space 12x12 wales at 5 feet vertically.
Position 2x6 uprights in a close sheeting configuration unless water pressure must be resisted. Tight sheeting must be used where water must be retained.

(d) Example 4.

A trench dug in Type C soil is 20 feet deep and 11 feet wide. The size and spacing of members for the section of trench that is over 15 feet in depth is determined using Table N-4. Only one arrangement of members is provided.
Space 8x10 crossbraces at 6 feet horizontally and 5 feet vertically.
Space 12x12 wales at 5 feet vertically.
Use 3x6 tight sheeting.
Use of Tables N-5, N-6, and N-7 would follow the same procedures.

(7) **Notes for all tables.**

(a) Member sizes at spacings other than indicated are to be determined as specified in WAC 296-155-657(3). "Design of Protective Systems."

(b) When conditions are saturated or submerged use Tight Sheeting. Tight Sheeting refers to the use of specially-edged timber planks (e.g., tongue and groove) at least 3 inches thick, steel sheet piling, or similar construction that when driven or placed in position provide a tight wall to resist the lateral pressure of water and to prevent the loss of backfill material. Close Sheeting refers to the placement of planks side-by-side allowing as little space as possible between them.

(c) All spacing indicated is measured center to center.

(d) Wales to be installed with greater dimension horizontal.

(e) If the vertical distance from the center of the lowest crossbrace to the bottom of the trench exceeds 2 1/2 feet, you must firmly embed uprights or use a mudsill. Where uprights are embedded, the vertical distance from the center of the lowest crossbrace to the bottom of the trench must not exceed 36 inches. When mudsills are used, the vertical distance shall not exceed 42 inches. Mudsills are wales that are installed at the toe of the trench side.

(f) Trench jacks may be used in lieu of or in combination with timber crossbraces.

(g) Placement of crossbraces. When the vertical spacing of crossbraces is 4 feet, place the top crossbrace no more than two feet below the top of the trench. When the vertical spacing of crossbraces is 5 feet, place the top crossbrace no more than 2.5 feet below the top of the trench.

TABLE N-2

TIMBER TRENCH SHORING -- MINIMUM TIMBER REQUIREMENTS*
SOIL TYPE A P_a - 25 X H + 72 psf (2 ft. Surcharge)

DEPTH OF TRENCH (FEET)	SIZE (ACTUAL) AND SPACING OF MEMBERS **													
	CROSS BRACES							WALES		UPRIGHTS				
	HORIZ. SPACING (FEET)	WIDTH OF TRENCH (FEET)					VERT. SPACING (FEET)	SIZE (IN.)	VERT. SPACING (FEET)	MAXIMUM ALLOWABLE HORIZONTAL SPACING (FEET)				
		UP TO 4	UP TO 6	UP TO 9	UP TO 12	UP TO 15				CLOSE	4	5	6	7
4 TO 10	UP TO 6	4 X 4	4 X 4	4 X 6	6 X 6	6 X 6	4	Not Req'd	---				2 X 6	
	UP TO 8	4 X 4	4 X 4	4 X 6	6 X 6	6 X 6	4	Not Req'd	---					2 X 8
	UP TO 10	4 X 6	4 X 6	4 X 6	6 X 6	6 X 6	4	8 X 8	4			2 X 6		
	UP TO 12	4 X 6	4 X 6	4 X 6	6 X 6	6 X 6	4	8 X 8	4				2 X 6	
10 TO 15	UP TO 6	4 X 4	4 X 4	4 X 4	6 X 6	6 X 6	4	Not Req'd	---				3 X 8	
	UP TO 8	4 X 6	4 X 6	4 X 6	6 X 6	6 X 6	4	8 X 8	4		2 X 6			
	UP TO 10	6 X 6	6 X 6	6 X 6	6 X 8	6 X 8	4	8 X 10	4			2 X 6		
	UP TO 12	6 X 6	6 X 6	6 X 6	6 X 8	6 X 8	4	10 X 10	4				3 X 8	
15 TO 20	UP TO 6	6 X 6	6 X 6	6 X 6	6 X 8	6 X 8	4	6 X 8	4	3 X 6				
	UP TO 8	6 X 6	6 X 6	6 X 6	6 X 8	6 X 8	4	8 X 8	4	3 X 6				
	UP TO 10	8 X 8	8 X 8	8 X 8	8 X 8	8 X 10	4	8 X 10	4	3 X 6				
	UP TO 12	8 X 8	8 X 8	8 X 8	8 X 8	8 X 10	4	10 X 10	4	3 X 6				
OVER 20	SEE NOTE 1													

* Mixed oak or equivalent with a bending strength not less than 850 psi.
** Manufacturered members of equivalent strength may be substituted for wood.

TABLE N-3

TIMBER TRENCH SHORING -- MINIMUM TIMBER REQUIREMENTS*
SOIL TYPE B P_a - 45 X H + 72 psf (2 ft. Surcharge)

DEPTH OF TRENCH (FEET)	SIZE (ACTUAL) AND SPACING OF MEMBERS **													
	CROSS BRACES							WALES		UPRIGHTS				
	HORIZ. SPACING (FEET)	WIDTH OF TRENCH (FEET)					VERT. SPACING (FEET)	SIZE (IN.)	VERT. SPACING (FEET)	MAXIMUM ALLOWABLE HORIZONTAL SPACING (FEET)				
		UP TO 4	UP TO 6	UP TO 9	UP TO 12	UP TO 15				CLOSE	2	3		
4 TO 10	UP TO 6	4 X 4	4 X 4	6 X 6	6 X 6	6 X 6	5	6 X 8	5			2 X 6		
	UP TO 8	4 X 4	4 X 4	6 X 6	6 X 8	6 X 8	5	8 X 10	5			2 X 6		
	UP TO 10	4 X 6	4 X 6	6 X 6	6 X 8	6 X 8	5	8 X 8	5			2 X 6		
	See Note 1													
10 TO 15	UP TO 6	4 X 4	4 X 4	6 X 6	6 X 8	6 X 8	5	8 X 8	5		2 X 6			
	UP TO 8	4 X 6	4 X 6	6 X 8	8 X 8	8 X 8	5	10 X 10	5		2 X 6			
	UP TO 10	6 X 6	6 X 6	8 X 8	8 X 8	8 X 10	5	10 X 12	5		2 X 6			
	See Note 1													
15 TO 20	UP TO 6	6 X 8	6 X 8	6 X 8	8 X 8	8 X 8	5	8 X 10	5	3 X 6				
	UP TO 8	8 X 8	8 X 8	8 X 8	8 X 8	8 X 10	5	10 X 10	5	3 X 6				
	UP TO 10	8 X 10	8 X 10	8 X 10	8 X 10	10 X 10	5	10 X 12	5	3 X 6				
	See Note 1													
OVER 20	SEE NOTE 1													

* Mixed oak or equivalent with a bending strength not less than 850 psi.
** Manufacturered members of equivalent strength may be substituted for wood.

TABLE N-4

TIMBER TRENCH SHORING -- MINIMUM TIMBER REQUIREMENTS*
SOIL TYPE C P_a - 80 X H + 72 psf (2 ft. Surcharge)

DEPTH OF TRENCH (FEET)	SIZE (ACTUAL) AND SPACING OF MEMBERS **													
	CROSS BRACES							WALES		UPRIGHTS				
	HORIZ. SPACING (FEET)	WIDTH OF TRENCH (FEET)					VERT. SPACING (FEET)	SIZE (IN.)	VERT. SPACING (FEET)	MAXIMUM ALLOWABLE HORIZONTAL SPACING (FEET)				
		UP TO 4	UP TO 6	UP TO 9	UP TO 12	UP TO 15				CLOSE				
4 TO 10	UP TO 6	6 X 8	6 X 8	6 X 8	8 X 8	8 X 8	5	8 X 10	5	2 X 6				
	UP TO 8	8 X 8	8 X 8	8 X 8	8 X 8	8 X 10	5	10 X 12	5	2 X 6				
	UP TO 10	8 X 10	8 X 10	8 X 10	8 X 10	10 X 10	5	12 X 12	5	2 X 6				
	See Note 1													
10 TO 15	UP TO 6	8 X 8	8 X 8	8 X 8	8 X 8	8 X 10	5	10 X 12	5	2 X 6				
	UP TO 8	8 X 10	8 X 10	8 X 10	8 X 10	10 X 10	5	12 X 12	5	2 X 6				
	See Note 1													
	See Note 1													
15 TO 20	UP TO 6	8 X 10	8 X 10	8 X 10	8 X 10	10 X 10	5	12 X 12	5	3 X 6				
	See Note 1													
	See Note 1													
	See Note 1													
OVER 20	SEE NOTE 1													

* Mixed oak or equivalent with a bending strength not less than 850 psi.
** Manufacturered members of equivalent strength may be substituted for wood.

Table N-5

TIMBER TRENCH SHORING -- MINIMUM TIMBER REQUIREMENTS*
SOIL TYPE B P_a - 45 X H + 72 psf (2 ft. Surcharge)

DEPTH OF TRENCH (FEET)	SIZE (ACTUAL) AND SPACING OF MEMBERS **													
	CROSS BRACES							WALES		UPRIGHTS				
	HORIZ. SPACING (FEET)	WIDTH OF TRENCH (FEET)					VERT. SPACING (FEET)	SIZE (IN.)	VERT. SPACING (FEET)	MAXIMUM ALLOWABLE HORIZONTAL SPACING (FEET)				
		UP TO 4	UP TO 6	UP TO 9	UP TO 12	UP TO 15				CLOSE	2	3		
4 TO 10	UP TO 6	4 X 4	4 X 4	6 X 6	6 X 6	6 X 6	5	6 X 8	5			2 X 6		
	UP TO 8	4 X 4	4 X 4	6 X 6	6 X 8	6 X 8	5	8 X 10	5			2 X 6		
	UP TO 10	4 X 6	4 X 6	6 X 6	6 X 8	6 X 8	5	8 X 8	5			2 X 6		
	See Note 1													
10 TO 15	UP TO 6	4 X 4	4 X 4	6 X 6	6 X 8	6 X 8	5	8 X 8	5		2 X 6			
	UP TO 8	4 X 6	4 X 6	6 X 8	8 X 8	8 X 8	5	10 X 10	5		2 X 6			
	UP TO 10	6 X 6	6 X 6	8 X 8	8 X 8	8 X 10	5	10 X 12	5		2 X 6			
	See Note 1													
15 TO 20	UP TO 6	6 X 8	6 X 8	6 X 8	8 X 8	8 X 8	5	8 X 10	5	3 X 6				
	UP TO 8	8 X 8	8 X 8	8 X 8	8 X 8	8 X 10	5	10 X 10	5	3 X 6				
	UP TO 10	8 X 10	8 X 10	8 X 10	8 X 10	10 X 10	5	10 X 12	5	3 X 6				
	See Note 1													
OVER 20	SEE NOTE 1													

* Mixed oak or equivalent with a bending strength not less than 850 psi.
** Manufacturered members of equivalent strength may be substituted for wood.

TABLE N-6

TIMBER TRENCH SHORING -- MINIMUM TIMBER REQUIREMENTS*
SOIL TYPE B P_a - 45 X H + 72 psf (2 ft. Surcharge)

DEPTH OF TRENCH (FEET)	SIZE (S4S) AND SPACING OF MEMBERS **													
	CROSS BRACES							WALES		UPRIGHTS				
	HORIZ. SPACING (FEET)	WIDTH OF TRENCH (FEET)					VERT. SPACING (FEET)	SIZE (IN.)	VERT. SPACING (FEET)	MAXIMUM ALLOWABLE HORIZONTAL SPACING (FEET)				
		UP TO 4	UP TO 6	UP TO 9	UP TO 12	UP TO 15				CLOSE	2	3	4	6
4 TO 10	UP TO 6	4 X 6	4 X 6	4 X 6	6 X 6	6 X 6	5	6 X 8	5			3 X 12 4 X 8		4 X 12
	UP TO 8	4 X 6	4 X 6	6 X 6	6 X 6	6 X 6	5	8 X 8	5		3 X 8		4 X 8	
	UP TO 10	4 X 6	4 X 6	6 X 6	6 X 6	6 X 8	5	8 X 10	5			4 X 8		
	See Note 1													
10 TO 15	UP TO 6	6 X 6	6 X 6	6 X 6	6 X 8	6 X 8	5	8 X 8	5	3 X 6	4 X 10			
	UP TO 8	6 X 6	6 X 8	6 X 8	8 X 8	8 X 8	5	10 X 10	5	3 X 6	4 X 10			
	UP TO 10	6 X 8	6 X 8	8 X 8	8 X 8	8 X 8	5	10 X 12	5	3 X 6	4 X 10			
	See Note 1													
15 TO 20	UP TO 6	6 X 8	6 X 8	6 X 8	6 X 8	8 X 8	5	8 X 10	5	4 X 6				
	UP TO 8	6 X 8	6 X 8	6 X 8	8 X 8	8 X 8	5	10 X 12	5	4 X 6				
	UP TO 10	8 X 8	8 X 8	8 X 8	8 X 8	8 X 8	5	12 X 12	5	4 X 6				
	See Note 1													
OVER 20	SEE NOTE 1													

* Douglas fir or equivalent with a bending strength not less than 1500 psi.
** Manufacturered members of equivalent strength may be substituted for wood.

TABLE N-7

TIMBER TRENCH SHORING -- MINIMUM TIMBER REQUIREMENTS*
SOIL TYPE C P_a - 80 X H + 72 psf (2 ft. Surcharge)

DEPTH OF TRENCH (FEET)	SIZE (S4S) AND SPACING OF MEMBERS **													
	CROSS BRACES							WALES		UPRIGHTS				
	HORIZ. SPACING (FEET)	WIDTH OF TRENCH (FEET)					VERT. SPACING (FEET)	SIZE (IN.)	VERT. SPACING (FEET)	MAXIMUM ALLOWABLE HORIZONTAL SPACING (FEET)				
		UP TO 4	UP TO 6	UP TO 9	UP TO 12	UP TO 15				CLOSE				
4 TO 10	UP TO 6	6 X 6	6 X 6	6 X 6	6 X 6	8 X 8	5	8 X 8	5	3 X 6				
	UP TO 8	6 X 6	6 X 6	6 X 6	8 X 8	8 X 8	5	10 X 10	5	3 X 6				
	UP TO 10	6 X 6	6 X 6	8 X 8	8 X 8	8 X 8	5	10 X 12	5	3 X 6				
	See Note 1													
10 TO 15	UP TO 6	6 X 8	6 X 8	6 X 8	8 X 8	8 X 8	5	10 X 10	5	4 X 6				
	UP TO 8	8 X 8	8 X 8	8 X 8	8 X 8	8 X 8	5	12 X 12	5	4 X 6				
	See Note 1													
	See Note 1													
15 TO 20	UP TO 6	8 X 8	8 X 8	8 X 8	8 X 10	8 X 10	5	10 X 12	5	4 X 6				
	See Note 1													
	See Note 1													
	See Note 1													
OVER 20	SEE NOTE 1													

* Douglas fir or equivalent with a bending strength not less than 1500 psi.
** Manufacturered members of equivalent strength may be substituted for wood.

[Statutory Authority: Chapter 49.17 RCW and RCW 49.17.040, [49.17].050 and [49.17].060. 92-22-067 (Order 92-06), § 296-155-66405, filed 10/30/92, effective 12/8/92.]

WAC 296-155-66407 Appendix D-Aluminum hydraulic shoring for trenches.

(1) **Scope**. This appendix contains information that can be used when aluminum hydraulic shoring is provided as a method of protection against cave-ins in trenches that do not exceed 20 feet (6.1m) in depth. This appendix must be used when design of the aluminum hydraulic protective system cannot be performed in accordance with WAC 296-155-657 (3)(b).

(2) **Soil Classification**. In order to use data presented in this appendix, you must first determine the soil type or types in which the excavation is made using the soil classification method set forth in appendix A of this Part.

(3) **Presentation of information**. Information is presented in several forms as follows:

(a) Information is presented in tabular form in Tables N-8 through N-11. Each table presents the maximum vertical and horizontal spacings that may be used with various aluminum member sizes and various hydraulic cylinder sizes. Each table contains data only for the particular soil type in which the excavation or portion of the excavation is made. Tables N-8 and N-9 are for vertical shores in Types A and B soil. Tables N-10 and N-11 are for horizontal waler systems in Types B and C soil.

(b) Information concerning the basis of the tabular data and the limitations of the data is presented in subsection (4) of this appendix.

(c) Information explaining the use of the tabular data is presented in subsection (5) of this appendix.

(d) Information illustrating the use of the tabular data is presented in subsection (6) of this appendix.

(e) Miscellaneous notations (footnotes) regarding Table N-8 through N-11 are presented in subsection (7) of this appendix.

(f) Figures, illustrating typical installations of hydraulic shoring, are included just prior to the Tables. The illustrations page is entitled “Aluminum Hydraulic Shoring: Typical Installations.”

(4) **Basis and limitations of the data.**

(a) Vertical shore rails and horizontal wales are those that meet the Section Modulus requirements in Tables N-8 through N-10. Aluminum material is 6061-T6 or material of equivalent strength and properties.

(b) Hydraulic cylinders specifications.

(i) two-inch cylinders must be a minimum two-inch inside diameter with a minimum safe working capacity of no less than 18,000 pounds axial compressive load at maximum extension. Maximum extension is to include full range of cylinder extensions as recommended by product manufacturer.

(ii) 3-inch cylinders must be a minimum 3-inch inside diameter with a safe working capacity of not less than 30,000 pounds axial compressive load at extensions as recommended by product manufacturer.

(c) Limitation of application.

(i) It is not intended that the aluminum hydraulic specification apply to every situation that may be experienced in the field. These data were developed to apply to the situations that are most commonly experienced in current trenching practice. Shoring systems for use in situations that are not covered by the data in this appendix must be otherwise designed as specified in WAC 296-155-657(3).

(ii) When any of the following conditions are present; the members specified in the Tables are not considered adequate. In this case, an alternative aluminum hydraulic shoring system or other type of protective system must be designed in accordance with WAC 296-155-657.

(A) When vertical loads imposed on cross braces exceed a 100 Pound gravity load distributed on a one foot section of the center of the hydraulic cylinder.

(B) When surcharge loads are present from equipment weighing in excess of 20,000 pounds.

(C) When only the lower portion of a trench is shored and the remaining portion of the trench is sloped or benched unless: The slope portion is sloped at an angle less steep than three horizontal to one vertical; or the members are selected from the tables for use at a depth which is determined from the top of the overall trench, and not from the toe of the sloped portion.

(5) **Use of Tables N-8 through N-11**. The members of the shoring system that are to be selected using this information are the hydraulic cylinders, and either the vertical shores or the horizontal wales. When a waler system is used the vertical timber sheeting to be used is also selected from these tables. The Tables N-8 and N-9 for vertical shores are used in Type A and B soils that do not require sheeting. Type B soils that may require sheeting, and Type C soils that always require sheeting are found in the horizontal wale Tables N-10 and N-11. The soil type must first be determined in accordance with the soil classification system described in appendix A of this Part. Using the appropriate table, the selection of the size and spacing of the members is made. The selection is based on the depth and width of the trench where the members are to be installed. In these tables the vertical spacing is held constant at 4 feet on center. The tables show the maximum horizontal spacing of cylinders allowed for each size of wale in the waler system tables, and in the vertical shore tables, the hydraulic cylinder horizontal spacing is the same as the vertical shore spacing.

(6) **Example to Illustrate the Use of the Tables:**

(a) Example 1: A trench dug in Type A soil is 6 feet deep and 3 feet wide. From Table N-8: Find vertical shores and two inch diameter cylinders spaced 8 feet on center (o.c.) horizontally and 4 feet on center (o.c.) vertically. (See Figures N-23 & N-25 for typical installations.)

(b) Example 2: A trench is dug in Type B soil that does not require sheeting, 13 feet deep and 5 feet wide. From Table N-9: Find vertical shores and two inch diameter cylinders spaced 6.5 feet o.c. horizontally and 4 feet o.c. vertically. (See Figures N-23 & N-25 for typical installations.)

(c) A trench is dug in Type B soil that does not require sheeting, but does experience some minor raveling of the trench face. The trench is 16 feet deep and 9 feet wide. From Table N-9: Find vertical shores and two inch diameter cylinder (with special oversleeves as designated by subdivision (7)(b)) spaced 5.5 feet o.c. horizontally and 4 feet o.c. vertically, plywood (per subdivision (7)(g) to the N-8 through N-11 Tables) should be used behind the shores. (See Figures N-24 & N-25 for typical installations.)

(d) Example 4: A trench is dug in previously disturbed Type B soil, with characteristics of a Type C soil, and will require sheeting. The trench is 18 feet deep and 12 feet wide. 8 foot horizontal spacing between cylinders is desired for working space. From Table N-10: Find horizontal wale with a section modulus of 14.0 spaced at 4 feet o.c. vertically and 3 inch diameter cylinder spaced at 9 feet maximum o.c. horizontally, 3x12 timber sheeting is required at close spacing vertically. (See Figure N-26 for typical installation.)

(e) Example 5: A trench is dug in Type C soil, 9 feet deep and 4 feet wide. Horizontal cylinder spacing in excess of 6 feet is desired for working space. From Table N-11: Find horizontal wale with a section modulus of 7.0 and two inch diameter cylinders spaced at 6.5 feet o.c. horizontally. Or, find horizontal wale with a 14.0 section modulus and 3 inch diameter cylinder spaced at 10 feet o.c. horizontally. Both wales are spaced 4 feet o.c. vertically. 3x12 timber sheeting is required at close spacing vertically. (See Figure N-26 for typical installation.)

(7) **Footnotes, and general notes, for Tables N-8 through N-11.**

(a) For applications other than those listed in the tables, refer to WAC 296-155-657 (3)(b) for use of manufacturer's tabulated data. For trench depths in excess of 20 feet, refer to WAC 296-155-657 (3)(b) and (c).

(b) Two-inch diameter cylinders, at this width, shall have structural steel tube (3.5x3.5x0.1875) oversleeves, or structural oversleeves of manufacturer's specification, extending the full, collapsed length.

(c) Hydraulic cylinders capacities.

(i) Two-inch cylinders must be a minimum 2-inch inside diameter with a safe working capacity of not less than 18,000 pounds axial compressive load at maximum extension. Maximum extension is to include full range of cylinder extensions as recommended by product manufacturer.

(ii) 3-inch cylinders must be a minimum 3-inch inside diameter with a safe work capacity of not less than 30,000 pounds axial compressive load at maximum extension. Maximum extension is to include full range of cylinder extensions as recommended by product manufacturer.

(d) All spacing indicated is measured center to center.

(e) Vertical shoring rails must have a minimum section modulus of 0.40 inch.

(f) When vertical shores are used, there must be a minimum of 3 shores spaced equally, horizontally, in a group.

(g) Plywood must be 1.125 in. thick softwood or 0.75 inch thick, 14 ply, arctic white birch (Finland form).

Please note that plywood is not intended as a structural member, but only for prevention of local raveling (sloughing of the trench face) between shores.

(h) See appendix C for timber specifications.

(i) Wales are calculated for simple span conditions.

(j) See subsection (4) of this appendix, for basis and limitations of the data.

FIGURE N-19
VERTICAL ALUMINUM
HYDRAULIC SHORING
(SPOT BRACING)

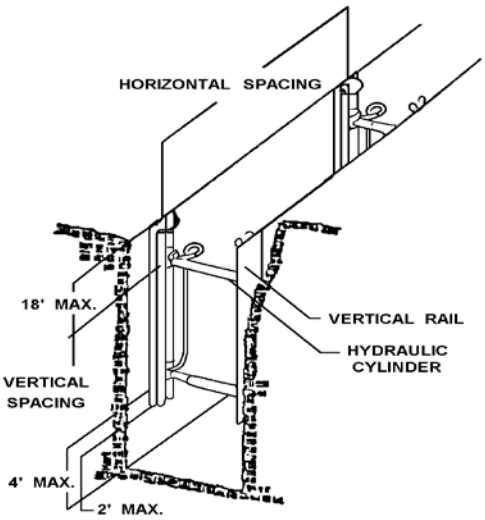

FIGURE N-20
VERTICAL ALUMINUM
HYDRAULIC SHORING
(WITH PLYWOOD)

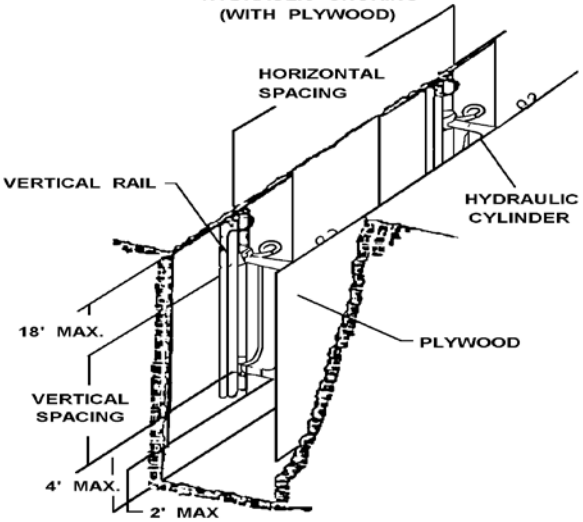

FIGURE N-21
ALUMINUM HYDRAULIC
WALER SYSTEM
(TYPICAL)

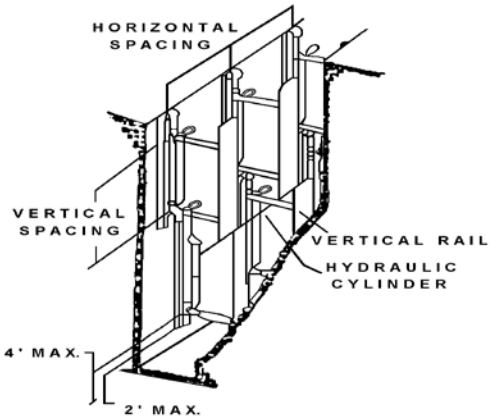

FIGURE N-22
ALUMINUM HYDRAULIC
WALER SYSTEM
(TYPICAL)

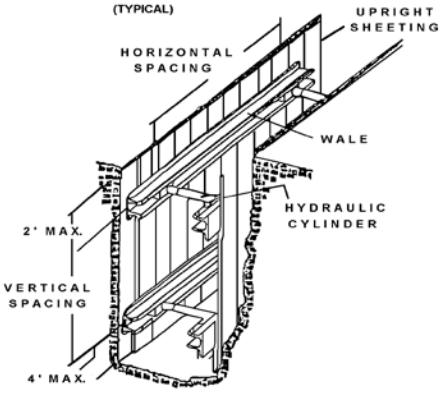

TABLE N-8
ALUMINUM HYDRAULIC SHORING
VERTICAL SHORES
FOR SOIL *TYPE A*

Depth of Trench (Feet)	Hydraulic Cylinders				
	Maximum Horizontal Spacing (Feet)	Maximum Vertical Spacing (Feet)	Width of Trench (Feet)		
			Up to 8	Over 8 Up to 12	Over 12 Up to 15
Over 4 Up to 10	8	4	2 INCH DIAMETER	2 INCH DIAMETER NOTE (2)	3 INCH DIAMETER
Over 10 Up to 15	8				
Over 15 Up to 20	7				
Over 20	NOTE (1)				

Footnotes to tables, and general notes on hydraulic shoring, are found in Appendix D, WAC 296-155-66407(7)
Note (1), See Appendix D, WAC 296-155-66407(7)(a)
Note (2), See Appendix D, WAC 296-155-66407(7)(b)

TABLE N-9
ALUMINUM HYDRAULIC SHORING
VERTICAL SHORES
FOR SOIL *TYPE B*

Depth of Trench (Feet)	Hydraulic Cylinders				
	Maximum Horizontal Spacing (Feet)	Maximum Vertical Spacing (Feet)	Width of Trench (Feet)		
			Up to 8	Over 8 Up to 12	Over 12 Up to 15
Over 4 Up to 10	8	4	2 INCH DIAMETER	2 INCH DIAMETER NOTE (2)	3 INCH DIAMETER
Over 10 Up to 15	6.5				
Over 15 Up to 20	5.5				
Over 20	NOTE (1)				

Footnotes to tables, and general notes on hydraulic shoring, are found in Appendix D, WAC 296-155-66407(7)
Note (1), See Appendix D, WAC 296-155-66407(7)(a)
Note (2), See Appendix D, WAC 296-155-66407(7)(b)

TABLE N-10
ALUMINUM HYDRAULIC SHORING
WALER SYSTEMS
FOR SOIL *TYPE B*

Depth of Trench (Feet)	Wales		Hydraulic Cylinders						Timber Uprights		
			Width of Trench (Feet)						Max. Horizontal Spacing (on Center)		
	Vertical Spacing (Feet)	Section* Modulus (In^3)	Up to 8		Over 8 Up to 12		Over 12 Up to 15		Solid Sheet	2 Feet	3 Feet
			Horiz. Spacing	Cylinder Diameter	Horiz. Spacing	Cylinder Diameter	Horiz. Spacing	Cylinder Diameter			
Over 4 Up to 10	4	3.5	8.0	2 IN	8.0	2 IN Note (2)	8.0	3 IN	—	—	3 X 12
		7.0	9.0	2 IN	9.0	2 IN Note (2)	9.0	3 IN			
		14.0	12.0	3 IN	12.0	3 IN	12.0	3 IN			
Over 10 Up to 15	4	3.5	6.0	2 IN	6.0	2 IN Note (2)	6.0	3 IN	—	3 X 12	—
		7.0	8.0	3 IN	8.0	3 IN	8.0	3 IN			
		14.0	10.0	3 IN	10.0	3 IN	10.0	3 IN			
Over 15 Up to 20	4	3.5	5.5	2 IN	5.5	2 IN Note (2)	5.5	3 IN	3 X 12	—	—
		7.0	6.0	3 IN	6.0	3 IN	6.0	3 IN			
		14.0	9.0	3 IN	9.0	3 IN	9.0	3 IN			
Over 20	NOTE (1)										

Footnotes to tables, and general notes on hydraulic shoring, are found in Appendix D, WAC 296-155-66407(7)
Note (1), See Appendix D, WAC 296-155-66407(7)(a)
Note (2), See Appendix D, WAC 296-155-66407(7)(b)
*Consult product manufacturer and/or qualified engineer for Section Modulus of available wales.

TABLE N-11
ALUMINUM HYDRAULIC SHORING
WALER SYSTEMS
FOR SOIL *TYPE C*

Depth of Trench (Feet)	Wales		Hydraulic Cylinders						Timber Uprights		
			Width of Trench (Feet)						Max. Horizontal Spacing (on Center)		
			Up to 8		Over 8 Up to 12		Over 12 Up to 15				
	Vertical Spacing (Feet)	Section* Modulus (In^3)	Horiz. Spacing	Cylinder Diameter	Horiz. Spacing	Cylinder Diameter	Horiz. Spacing	Cylinder Diameter	Solid Sheet	2 Feet	3 Feet
Over 4 Up to 10	4	3.5	6.0	2 IN	6.0	2 IN Note (2)	6.0	3 IN	3 X 12	—	—
		7.0	6.5	2 IN	6.5	2 IN Note (2)	6.5	3 IN			
		14.0	10.0	3 IN	10.0	3 IN	10.0	3 IN			
Over 10 Up to 15	4	3.5	4.0	2 IN	4.0	2 IN Note (2)	4.0	3 IN	3 X 12	—	—
		7.0	5.5	3 IN	5.5	3 IN	5.5	3 IN			
		14.0	8.0	3 IN	8.0	3 IN	8.0	3 IN			
Over 15 Up to 20	4	3.5	3.5	2 IN	3.5	2 IN Note (2)	3.5	3 IN	3 X 12	—	—
		7.0	5.0	3 IN	5.0	3 IN	5.0	3 IN			
		14.0	6.0	3 IN	6.0	3 IN	6.0	3 IN			
Over 20	NOTE (1)										

Footnotes to tables, and general notes on hydraulic shoring, are found in Appendix D, WAC 296-155-66407(7)
Note (1), See Appendix D, WAC 296-155-66407(7)(a)
Note (2), See Appendix D, WAC 296-155-66407(7)(b)
***Consult product manufacturer and/or qualified engineer for Section Modulus of available wales.**

[Statutory Authority: RCW 49.17.010, .040, .050, and .060. 16-09-085 (Order 15-08), § 296-155-66407, filed 04/19/16, effective, 05/20/16. Statutory Authority: Chapter 49.17 RCW and RCW 49.17.040, [49.17].050 and [49.17].060. 92-22-067 (Order 92-06), § 296-155-66407, filed 10/30/92, effective 12/8/92.]

55-66409 Appendix E--Alternatives to timber shoring.

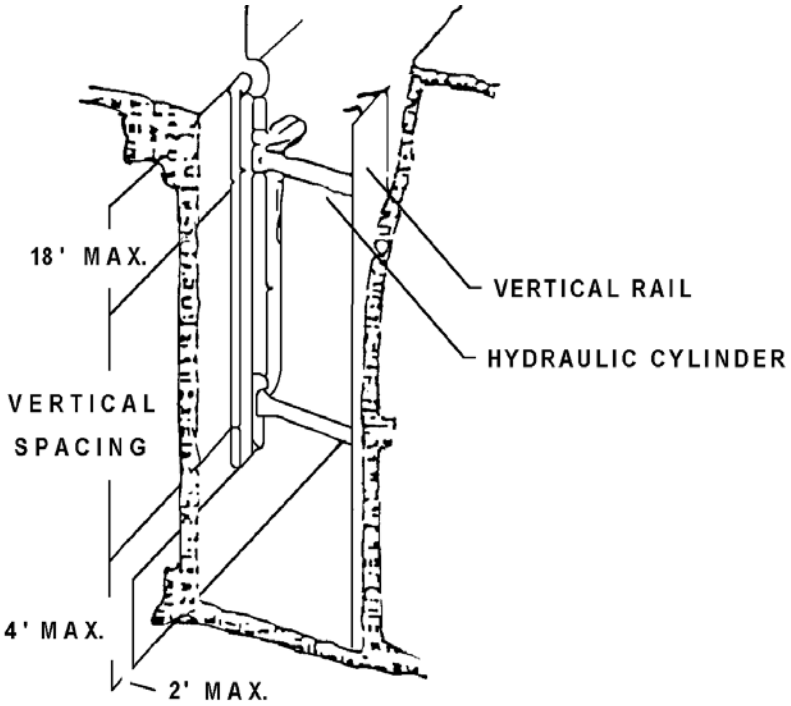

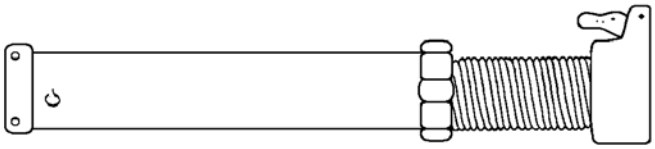

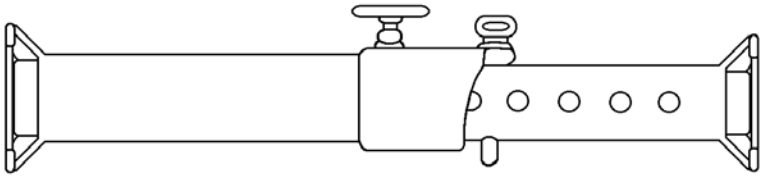

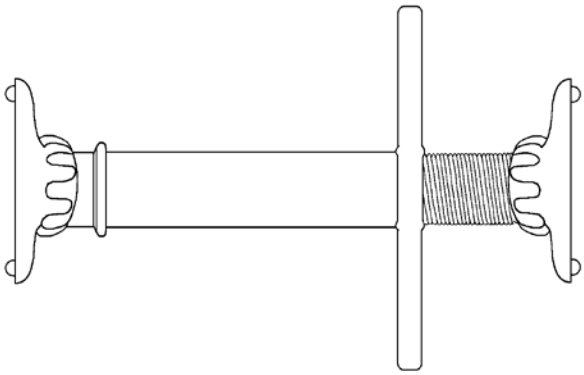

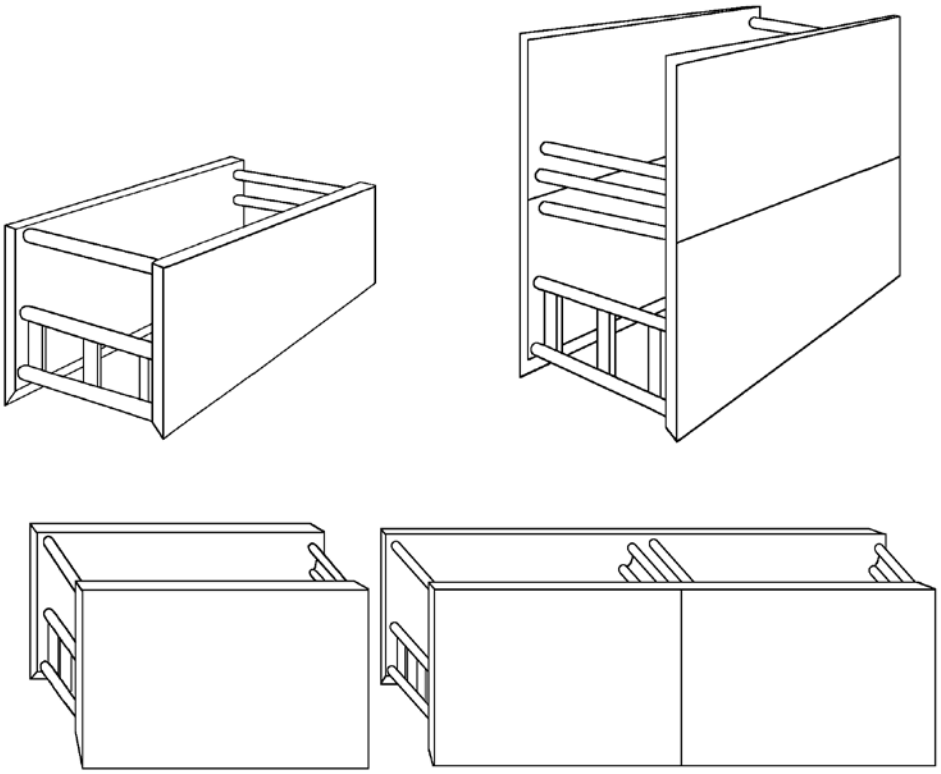

[Statutory Authority: Chapter 49.17 RCW and RCW 49.17.040, [49.17].050 and [49.17].060. 92-22-067 (Order 92-06), § 296-155-66409, filed 10/30/92, effective 12/8/92.]

WAC 296-155-66411 Appendix F--Selection of protective systems.

The following figures are a graphic summary of the requirements contained in Part N for excavations 20 feet or less in depth. Protective systems for use in excavations more than 20 feet in depth must be designed by a registered professional engineer in accordance with WAC 296-155-657 (2) and (3).

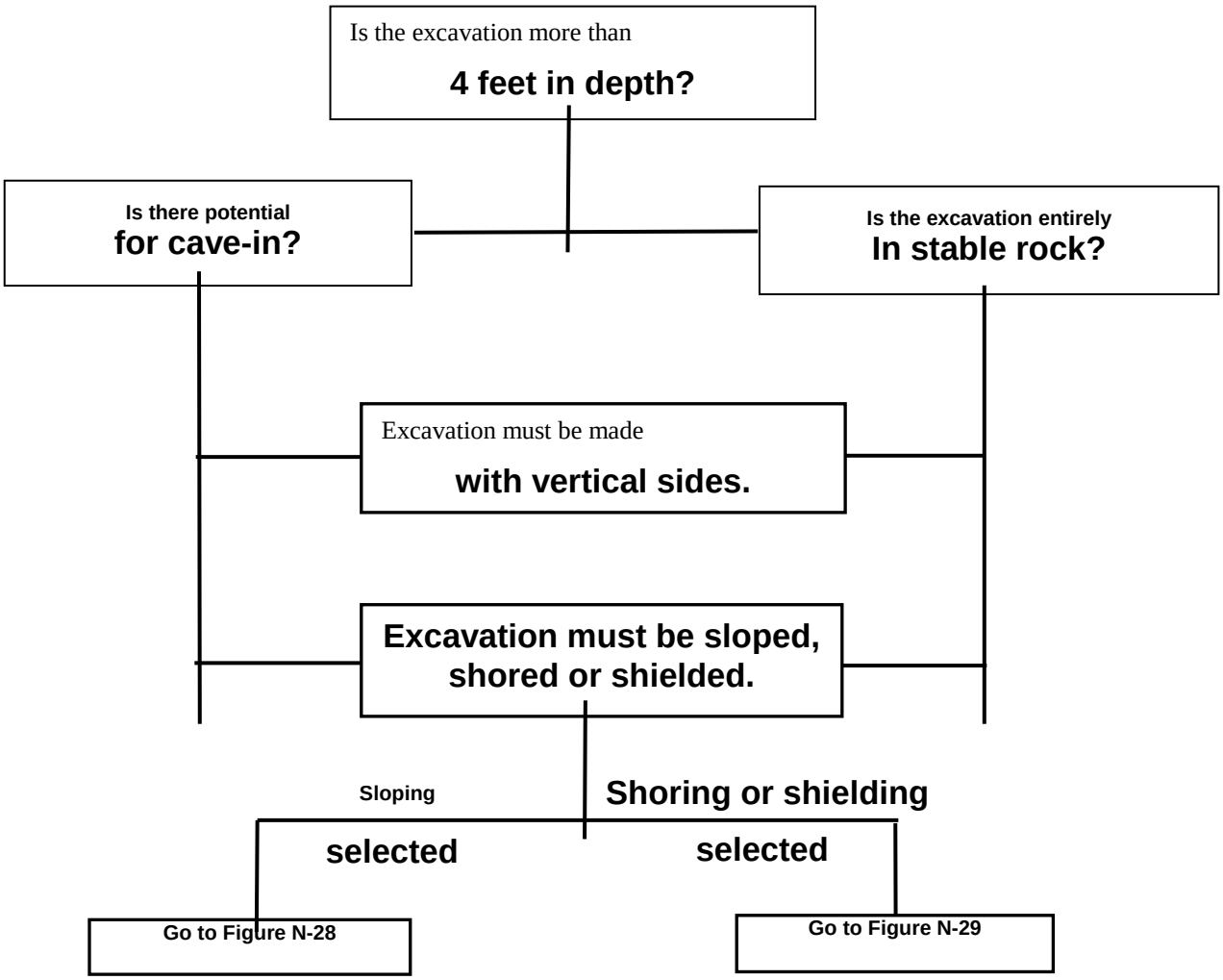

Figure N-27 - PRELIMINARY DECISIONS

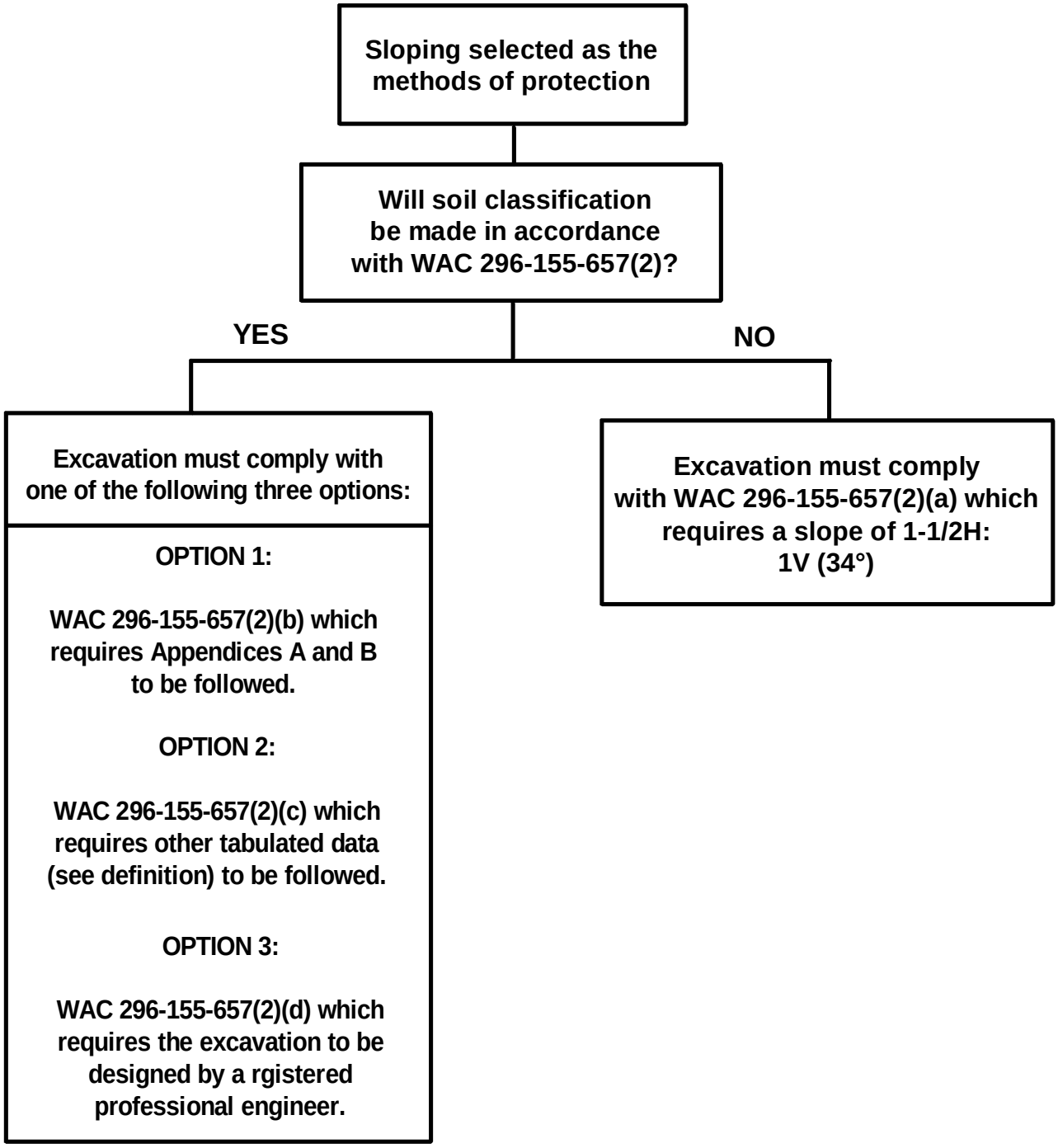

FIGURE N-28 - SLOPING OPTIONS

Shoring or shielding selected as the method of protection.

Soil classification is required when shoring or shielding is used. The excavation must comply with one of the following four options:

OPTION 1:

WAC 296-155-657(3)(a) which requires Appendices A and C to be followed (e.g., timber shoring)

OPTION 2:

WAC 296-155-657(3)(b) which requires manufacturers data to be followed (e.g., hydraulic shoring, trench jacks, air shores, shields)

OPTION 3:

WAC 296-155-657(3)(c) which requires tabulated data (see definition) to be followed (e.g., any system as per the tabulated data).

OPTION 4:

WAC 296-155-657(3)(d) which requires the excavation to be designed by a registered professional engineer (e.g., any designed system).

FIGURE N-29 - SHORING AND SHIELDING OPTIONS

[Statutory Authority: Chapter 49.17 RCW and RCW 49.17.040, [49.17].050 and [49.17].060. 92-22-067 (Order 92-06), § 296-155-66411, filed 10/30/92, effective 12/8/92.]

PART O
CONCRETE, CONCRETE FORMS, SHORING, AND MASONRY CONSTRUCTION

LAST UPDATED: 05/20/2106

WAC 296-155-675 Scope, application, and definitions applicable to this part. 1

WAC 296-155-680 General provisions. 2

WAC 296-155-681 Safe walking surfaces on concrete structural members. 3

WAC 296-155-682 Requirements for equipment and tools..... 4

WAC 296-155-683 Concrete finishing. 12

WAC 296-155-684 Requirements for cast in place concrete.13

WAC 296-155-685 Tubular welded frame shoring. 16

WAC 296-155-686 Tube and coupler shoring. 17

WAC 296-155-687 Single post shores. 17

WAC 296-155-688 Vertical slip forms. 19

WAC 296-155-689 Placing and removal of forms. 20

WAC 296-155-690 Appendix to WAC 296-155-684 cast in place concrete. 21

WAC 296-155-691 Precast concrete and tilt-up operations.. 21

WAC 296-155-694 Requirements for lift-slab construction operations. 23

Appendix to WAC 296-155-694-Lift-slab operations 25

WAC 296-155-695 Miscellaneous concrete construction. 26

WAC 296-155-697 Requirements for masonry construction.27

WAC 296-155-699 Appendix A to Part O-References to Part O of chapter 296-155 WAC. 28

WAC 296-155-675 Scope, application, and definitions applicable to this part.

(1) **Scope and application**. This part sets forth requirements to protect all construction employees from the hazards associated with concrete and masonry construction operations performed in workplaces covered under chapter 296-155 WAC.

(2) **Definitions applicable to this part.**

Bull float. **A** tool used to spread out and smooth the concrete.

Formwork. the total system of support for freshly placed or partially cured concrete, including the mold or sheeting (form) that is in contact with the concrete as well as all supporting members including shores, reshores, hardware, braces, and related hardware.

Jacking operation. The task of lifting a slab (or group of slabs) vertically from one location to another (e.g., from the casting location to a temporary (parked) location, or from a temporary location to another temporary location, or to its final location in the structure), during the construction of a building/structure where the lift-slab process is being used.

Lift slab. A method of concrete construction in which floor and roof slabs are cast on or at ground level and, using jacks, lifted into position.

Limited access zone. An area alongside a masonry wall, which is under construction, and which is clearly demarcated to limit access by employees.

Precast concrete. Concrete members (such as walls, panels, slabs, columns, and beams) which have been formed, cast, and cured prior to final placement in a structure.

Reshoring. The construction operation in which shoring equipment (also called reshores or reshoring equipment) is placed, as the original forms and shores are removed, in order to support partially cured concrete and construction loads.

Shore. A supporting member that resists a compressive force imposed by a load.

Vertical slip forms. Forms which are jacked vertically during the placement of concrete.

"Guy. A line that steadies a high piece or structure by pulling against an off-center load.

[Statutory Authority: RCW 49.17.010, .040, .050, and .060. 16-09-085 (Order 15-08), § 296-155-675, filed 04/19/16, effective, 05/20/16. Statutory Authority: Chapter 49.17 RCW. 94-15-096 (Order 94-07), § 296-155-675, filed 7/20/94, effective 9/20/94; 91-11-070 (Order 91-01), § 296-155-675, filed 5/20/91, effective 6/20/91; 90-03-029 (Order 89-20), § 296-155-675, filed 1/11/90, effective 2/26/90; 89-11-035 (Order 89-03), § 296-155-675, filed 5/15/89, effective 6/30/89; Order 74-26, § 296-155-675, filed 5/7/74, effective 6/6/74.]

WAC 296-155-680 General provisions.

(1) **General**. All equipment, material and construction techniques used in concrete construction and masonry work must meet the applicable requirements for design, construction, inspection, testing, maintenance and operations as prescribed in ANSI A10.9-1997, Concrete and Masonry Work Safety Requirements.

(2) **Construction loads**. You must not place any construction loads on a concrete structure or portion of a concrete structure unless the employer determines, based on information received from a person who is qualified in structural design, that the structure or portion of the structure is capable of supporting the loads.

(3) **Vertical loads**. Vertical loads consist of a dead load plus an allowance for live load. The weight of formwork together with the weight of freshly placed concrete is dead load. The live load consists of the weight of workers, equipment, runways and impact, and must be computed in pounds per square foot (psf) of horizontal projection.

(4) **Lateral loads**. Braces and shores must be designed to resist all foreseeable lateral loads such as wind, cable tensions, inclined supports, impact of placement, and starting and stopping of equipment. The assumed value of load due to wind, impact of concrete, and equipment acting in any direction at each floor line must not be less than 100 pounds per lineal foot of floor edge or two percent of total dead load of the floor, whichever is greater. Wall forms must be designed for a minimum wind load of 10 psf, and bracing for wall forms should be designed for a lateral load of at least 100 pounds per lineal foot of wall, applied at the top. Walls of unusual height require special consideration.

(5) **Special loads**. Formwork must be designed for all special conditions of construction likely to occur, such as unsymmetrical placement of concrete, impact of machine-delivered concrete, uplift, and concentrated loads.

(6) You must check form supports and wedges during concrete placement to prevent distortion or failure.

(7) **Reinforcing steel.**

(a) You must guard all protruding reinforcing steel, onto and into which employees could fall, to eliminate the hazard of impalement.

(b) Wire mesh rolls: You must secure wire mesh rolls at each end to prevent dangerous recoiling action.

(c) Guying: You must guy or support enforcing steel for walls, piers, columns, and similar vertical structures to prevent overturning and to prevent collapse.

(8) **Post-tensioning operations.**

(a) You must not permit any employee (except those essential to the post-tensioning operations) to be behind the jack during tensioning operations.

(b) You must erect signs and barriers to limit employee access to the post-tensioning area during tensioning operations.

(c) You must handle stressed members at pick points specifically designated on the manufacturer's drawings.

(d) You must lift stressed members with lifting devices recommended by the manufacturer or the engineer in charge.

(e) No one must be allowed under stressed members during lifting and erecting.

(9) **Working under loads.**

(a) You must not permit any employee to work under concrete buckets while buckets are being elevated or lowered into position.

(b) To the extent practical, you must route elevated concrete buckets so that no employee, or the fewest number of employees, are exposed to the hazards associated with falling concrete buckets.

(10) **Personal protective equipment.**

(a) You must not permit any employee to apply a cement, sand, and water mixture through a pneumatic hose unless the employee is wearing protective head and face equipment.

(b) You must not permit any employee to place or tie reinforcing steel more than 6 feet (1.8 m) above any adjacent working surface unless the employee is protected by personal fall arrest systems, safety net systems, or positioning device systems meeting the criteria of chapter 296-155 WAC, Part C-1.

(c) You must protect each employee on the face of formwork or reinforcing steel from falling 6 feet (1.8m) or more to lower levels by personal fall arrest systems, safety net systems, or positioning device systems meeting the criteria of chapter 296-155 WAC, Part C-1.

[Statutory Authority: RCW 49.17.010, .040, .050, and .060. 16-09-085 (Order 15-08), § 296-155-680, filed 04/19/16, effective, 05/20/16. Statutory Authority: RCWs 47.17.010, 49.17.040, 49.17.050, 49.17.440 and 49.17.060. 12-01-086 (Order 08-32), § 296-155-680, filed 12/20/11, effective 02/01/12. Statutory Authority: RCW 49.17.010, .040, .050, and .060. 10-11-103 (Order 10-03), § 296-155-680, filed 05/18/10, effective 07/01/10. Statutory Authority: RCW 49.17.010, .040, .050. 00-14-058 (Order 99-43), § 296-155-680, filed 07/03/2000, effective 10/01/2000. Statutory Authority: Chapter 49.17 RCW. 94-15-096 (Order 94-07), § 296-155-680, filed 7/20/94, effective 9/20/94; 90-17-051 (Order 90-10), § 296-155-680, filed 8/13/90, effective 9/24/90; 90-03-029 (Order 89-20), § 296-155-680, filed 1/11/90, effective 2/26/90; 89-11-035 (Order 89-03), § 296-155-680, filed 5/15/89, effective 6/30/89. Statutory Authority: RCW 49.17.040 and 49.17.050. 86-03-074 (Order 86-14), § 296-155-680, filed 1/21/86; Order 74-26, § 296-155-680, filed 5/7/74, effective 6/6/74.]

WAC 296-155-681 Safe walking surfaces on concrete structural members.

You must not use structural members with studs, dowels, or shear connectors installed on the top side as a walkway and/or means of access unless such studs, dowels, or shear connectors are covered with suitable material and in such a manner as to provide a walking surface at least as stable and free of hazards as the top surface of the member would provide without attachments installed.

*Note: For the purpose of this section, **"stud"** means all protruding metal attachments to structural members.*

[Statutory Authority: RCW 49.17.010, .040, .050, and .060. 16-09-085 (Order 15-08), § 296-155-681, filed 04/19/16, effective, 05/20/16. Statutory Authority: Chapter 49.17 RCW. 89-11-035 (Order 89-03), § 296-155-681, filed 5/15/89, effective 6/30/89.]

WAC 296-155-682 Requirements for equipment and tools.

(1) **Bulk cement storage**. Bulk storage bins, containers, and silos must be equipped with the following:

(a) Conical or tapered bottoms; and

(b) Mechanical or pneumatic means of starting the flow of material.

(2) You must not permit any employee to enter storage facilities unless the ejection system has been shut down and locked out in accordance with WAC 296-155-429.

(3) You must use harnesses, lanyards, lifelines or droplines, independently attached or attended, as prescribed in chapter 296-155 WAC, Part C-1, Fall protection requirements for construction.

(4) **Concrete mixers**. Concrete mixers with one cubic yard (.8 m3) or larger loading skips must be equipped with the following:

(a) A mechanical device to clear the skip of materials; and

(b) Guardrails installed on each side of the skip.

(5) **Power concrete trowels**. Powered and rotating type concrete troweling machines that are manually guided must be equipped with a control switch that will automatically shut off the power whenever the hands of the operator are removed from the equipment handles.

(6) **Concrete buggies**. Concrete buggy handles must not extend beyond the wheels on either side of the buggy.

Note: Installation of knuckle guards on buggy handles is recommended.

(7) **Runways.**

(a) Runways must be constructed to carry the maximum contemplated load with a safety factor of 4, have a smooth running surface, and be of sufficient width for two buggies to pass. Single runs to have a minimum width of 42 inches with turnouts. Runways to have standard railings. Where motor driven concrete buggies are used, a minimum 4-inches by 4-inches wheel guard must be securely fastened to outside edge of runways.

(b) All concrete buggy runways which are 12 inches or more above a work surface or floor, or ramps with more than 4 percent incline are considered “elevated” runways.

Exception: Small jobs utilizing only one concrete buggy, or larger jobs utilizing a “one-way traffic pattern” may be exempt from the requirements for “turnouts” or for” sufficient width for two buggies to pass.”

EXEMPTION
Runways less than 12 inches above the floor or ground which are utilized by hard-powered buggies only, may be exempt from the requirements for guardrails and wheelguards.

(8) **Concrete pumps and placing booms.**

(a) Definitions.

Concrete delivery hose. A flexible concrete delivery hose which has two end couplings.

Concrete pump. A construction machine that pumps concrete.

Controls. The devices used to operate a machine.

Delivery systems. The pipe, hoses and components, through which the concrete is pumped.

Grooved end. A pipe clamp pipe connection where a groove is machined or rolled directly into the outside of the pipe wall (for example: Victualic).

Material pressure. The pressure exerted on the concrete inside the delivery system.

Placing boom and placing unit. A manual or power driven, slewable working device which:

- Consists of one or more extendable or folding parts for supporting the concrete delivery system, and directs the discharge into the desired location; and
- May be mounted on trucks, trailers, or special vehicles.

Qualified person. Someone who:

- Possesses a recognized degree or certificate of professional standing; or
- Has extensive knowledge, training, and experience; or
- Successfully demonstrated the ability to resolve problems relating to the work.

Restraining devices. A sling, cable, or equivalent device used to minimize excess movement of a delivery system in case of separation.

Whip hoses. A suspended hose that has only one coupling and is used to direct the delivery of concrete.

(b) Equipment requirements.

(i) Equipment identification tag.

You must ensure the following identification is furnished if originally identified by the manufacturer and on all pumps manufactured after January 1, 1998:

- The manufacturer's name;
- The year of manufacture;
- The model and serial number;

- The maximum material pressure;
- The maximum allowable pressure in the hydraulic system; and
- The maximum weight per foot of delivery system including concrete.

(ii) Manufacturer's manual.

You must have the manufacturer's operation/safety manual or equivalent available for each concrete pump or placing boom.

(iii) Unsafe condition of equipment.

If during an equipment inspection a condition is revealed that might endanger workers, the equipment must not be returned to service until the condition is corrected.

(iv) Controls.

Controls must have their function clearly marked.

(v) Hydraulic systems.

(A) Concrete pumps and placing booms hydraulic systems must have pressure relief valves to prevent cylinder and boom damage.

(B) Hydraulic systems must have hydraulic holding valves if hose or coupling failure could result in uncontrolled vertical movement.

(iv) Certification.

In the event of failure of a structural member, overloading, or contact with energized electric power lines and before return to service, the equipment must be certified safe by:

- The manufacturer; or
- An agent of the manufacturer; or
- A professional engineer.

(vii) Marking weight. A permanent, legible notice stating the total weight of the unit must be marked on:

- Trailer or skid mounted concrete pumps;
- Placing booms; and
- All major detachable components over 500 hundred pounds.

(viii) Lifting a pump.

A concrete pump must be lifted using the lift points specified by the manufacturer or a professional engineer.

(ix) Emergency shutoff.

A concrete pump must have a clearly labeled emergency stop switch that stops the pumping action.

(x) Inlet and outlet guarding.

(A) The waterbox must have a fixed guard to prevent unintentional access to the moving parts.

(B) The agitator must be guarded with a point of operation guard in accordance with chapter 296-806 WAC, Machine safety, and the guard must be:

- Hinged or bolted in place;
- At least 3 inches distance from the agitator;
- Be capable of supporting a load of 250 pounds.

(C) A person must not stand on the guard when the pump or agitator is running.

(xi) Outriggers.

(A) You must use outriggers in accordance with the manufacturer's specifications.

(B) Concrete pump trucks manufactured after January 1, 1998, must have outriggers or jacks permanently marked to indicate the maximum loading they transmit to the ground.

(xii) Load on a placing boom.

(A) The manufacturer's or a licensed, registered, structural engineer's specifications for the placing boom must not be exceeded by:

- The weight of the load;
- The length and diameter of suspended hose;
- The diameter and weight of mounted pipe.

(B) A concrete placing boom must not be used to drag hoses or lift other loads.

(C) All engineering calculations regarding modifications must be:

- Documented;
- Recorded; and
- Available upon request.

(xiii) Pipe diameter thickness. The pipe wall thickness must be measured in accordance with the manufacturer's instruction, and:

- Be sufficient to maintain a burst pressure greater than the maximum pressure the pump can produce;
- The pipe sections must be replaced when measurements indicate wall thickness has been reduced to the limits specified by the manufacturer.

(xiv) Pipe clamps.

(A) You must not pump concrete through a delivery system with grooved ends, such as those for Victualic-type couplers.

(B) Pipe clamps must have a pressure rating at least equal to the pump pressure rating.

(C) Pipe clamps contact surfaces must be free of concrete and other foreign matter.

(D) If quick connect clamps are used, you must pin or secure them to keep them from opening when used in a vertical application.

(xv) Delivery pipe.

(A) A delivery pipe between the concrete pump and the placing system must be supported and anchored to prevent movement and excessive loading on clamps.

(B) Double ended hoses must not be used as whip hoses.

(C) Attachments must not be placed on whip hoses (i.e., "S" hooks, valves, etc.).

Table 1. Nonmandatory Recommended Maximum Yards Per Hour Through Hose

Hose Diameter	Hose Length (12' and less) Max. yards per hour	Hose Length (12' and longer) Max. yards per hour
2"	30	30
3"	90	50
4"	160	110
5"	See Manufacturer specs	See manufacturer specs

- The above figures are based on a minimum of a 4" slump and a 5 sack mix.
- Variables in mix design can have an effect on these ratings.
- Aggregate should not exceed 1/3 the diameter on these delivery system.

(xvi) Restraining. A restraining device must:

- Be used on attachments suspended from the boom tips; and
- Have a load rating not less than 1/5 of its ultimate breaking strength.

(xvii) Equipment inspection.

(A) An inspection must be conducted annually for the first 5 years and semiannually thereafter and must include the following:

- Nondestructive testing of all sections of the boom by a method capable of ensuring the structural integrity of the boom;
- Be conducted by a qualified person or by a private agency.

(B) The inspection report must be documented and a copy maintained by the employer and in each unit inspected. It must contain the following:

- The identification, including the serial numbers and manufacturer's name, of the components and parts inspected and tested;
- A description of the test methods and results;
- The names and qualifications of the people performing the inspection;
- A listing of necessary repairs; and
- The signature of the manufacturer, an agent of the manufacturer, or a qualified person.

Note: See WAC 296-155-628(8)(d) for the inspection worksheet criteria.

(xviii) Equipment repair.

(A) Replacement parts must meet or exceed the original manufacturer's specifications or be certified by a registered professional structural engineer.

(B) A properly certified welder must perform any welding on the boom, outrigger, or structural component.

(xix) Compressed air cleaning of the piping system. To clean the piping system:

(A) The pipe system must be securely anchored before it is cleaned out.

(B) The flexible discharge hose must be removed.

(C) Workers not essential to the cleaning process must leave the vicinity.

(D) The compressed air system must have a shutoff valve.

(E) Blow out caps must have a bleeder valve to relieve air pressure.

(F) A trap basket or containment device (i.e., concrete truck, concrete bucket) must be available and secured to receive the clean out device.

(G) Delivery pipes must be depressurized before clamps and fittings are released.

(c) Qualifications and training requirements.

(i) Operator trainee-Qualification requirements. To be qualified to become a concrete pump operator, the trainee must meet the following requirements unless it can be shown that failure to meet the requirements will not affect the operation of the concrete pump boom.

(A) Vision requirements:

- At least 20/30 Snellen in one eye and 20/50 in the other. Corrective lenses may be used to fulfill this requirement;
- Ability to distinguish colors, regardless of position, if color differentiation is required;
- Normal depth perception and field of vision.

(B) Hearing requirements. Hearing adequate to meet operational demands. Corrective devices may be used to fulfill this requirement.

(ii) Operator trainee-Training requirements. Operator trainee training requirements include, but are not limited to, the following:

(A) Demonstrated their ability to read and comprehend the pump manufacturer's operation and safety manual.

(B) Be of legal age to perform the duties required.

(C) Received documented classroom training and testing (as applicable) on these recommended subjects:

- Driving, operating, cleaning and maintaining concrete pumps, placing booms, and related equipment;
- Jib/boom extensions;
- Boom length/angle;
- Manufacturer's variances;
- Radii;
- Range diagram, stability, tipping axis; and
- Structural/tipping determinations.

(D) Maintain and have available upon request a copy of all training materials and a record of training.

(E) Satisfactorily complete a written examination for the concrete pump boom for which they are becoming qualified. It will cover:

- Safety;
- Operational characteristics and limitations; and
- Controls.

(iii) Operator-Qualifications requirements. Operators will be considered qualified when they have:

(A) Completed the operator trainee requirements listed in (c)(i) and (ii) of this subsection.

(B) Completed a program of training conducted by a qualified person, including practical experience under the direct supervision of a qualified person.

(C) Passed a practical operating examination of their ability to operate a specific model and type of equipment. Possess the knowledge and the ability to implement emergency procedures.

(D) Possess the knowledge regarding the restart procedure after emergency stop has been activated.

(E) Possess the proper class of driver's license to drive the concrete pump truck.

(F) Demonstrate the ability to comprehend and interpret all labels, safety decals, operator's manuals, and other information required to safely operate the concrete pump.

(G) Be familiar with the applicable safety requirements.

(H) Understand the responsibility for equipment maintenance.

(d) Concrete pump inspection worksheet criteria. Concrete pump trucks will be inspected using the following criteria: The manufacturer's required inspection criteria will be followed in all instances.

Note: DOT requirements for inspections-Ref. 49 C.F.R. 396.11, Driver Vehicle Inspections and 396.13, Driver Pre-Trip Inspections; and WAC 296-155-610.

(i) Hydraulic systems.

(A) Oil level;

(B) Hoses;

(C) Fittings;

(D) Holding valves;

(E) Pressure settings;

(F) Hydraulic cylinders;

(G) Ensure that the emergency stop system is functioning properly;

(H) All controls clearly marked.

(ii) Electrical.

(A) All systems functioning properly.

(B) All remote control functions are operating properly. Ensure that the emergency stop system is functioning properly.

(C) All controls clearly marked.

(iii) Structural.

(A) Visual inspection for cracks, corrosion, and deformations of the concrete pump with placing boom structure, and all load carrying components such as outriggers, cross frames, torsion box beams, and delivery line support structures that may lead to nondestructive testing.

(B) Visual examination of all links, pivots, pins, and bolts.

(C) Vertical and horizontal movement at the turret, turntable, rotation gear lash, bearing tolerances, not to exceed manufacturer's specifications.

(iv) Piping systems.

(A) Wall thickness must not exceed original manufacturer's specifications.

(B) Mounting hardware for attaching delivery system.

(C) Correct clamps and safety pins.

(v) Safety decals.

All safety decals must be in place as required by the manufacturer.

(9) **Concrete buckets.**

(a) Concrete buckets equipped with hydraulic or pneumatic gates must have positive safety latches or similar safety devices installed to prevent premature or accidental dumping.

(b) Concrete buckets must be designed to prevent concrete from hanging up on top and the sides.

(c) Riding of concrete buckets for any purpose is be prohibited, and you must keep vibrator crews out from under concrete buckets suspended from cranes or cableways.

(d) When discharging on a slope, you must block the wheels of ready-mix trucks and the brakes set to prevent movement.

(10) **Tremies**. You must secure sections of tremies and similar concrete conveyances with wire rope (or equivalent materials in addition to the regular couplings or connections).

(11) **Bull floats**. Bull float handles, used where they might contact energized electrical conductors, must be constructed of nonconductive material or insulated with a nonconductive sheath whose electrical and mechanical characteristics provide the equivalent protection of a handle constructed of nonconductive material.

(12) Masonry saws must be constructed, guarded, and operated in accordance with WAC 296-155-367 (1) through (4).

(13) **Lockout/tagout procedures**. You must not permit any employee to perform maintenance or repair activity on equipment (such as compressors, mixers, screens, or pumps used for concrete and masonry construction activities) where the inadvertent operation of the equipment could occur and cause injury, unless all potentially hazardous energy sources have been locked out and tagged in accordance with chapter 296-155 WAC, Part I.

[Statutory Authority: RCW 49.17.010, .040, .050, and .060. 16-09-085 (Order 15-08), § 296-155-682, filed 04/19/16, effective, 05/20/16. Statutory Authority: RCW 49.17.010, .040, .050, and .060. 13-04-073 (Order 06-08), § 296-155-682 , filed 02/04/13, effective 04/01/13. Statutory Authority: RCW 49.17.010, .040, .050, and .060. 04-14-028 (Order 01-12), § 296-155-682, filed 06/29/04, effective 01/01/05. Statutory Authority: RCW 49.17.010, .040, .050. 00-21-102 (Order 99-09), § 296-155-682, filed 10/18/00, effective 02/01/01. Statutory Authority: Chapter 49.17 RCW. 95-10-016, § 296-155-682, filed 4/25/95, effective 10/1/95; 94-15-096 (Order 94-07), § 296-155-682, filed 7/20/94, effective 9/20/94; 91-03-044 (Order 90-18), § 296-155-682, filed 1/10/91, effective 2/12/91; 90-17-051 (Order 90-10), § 296-155-682, filed 8/13/90, effective 9/24/90; 89-11-035 (Order 89-03), § 296-155-682, filed 5/15/89, effective 6/30/89.]

WAC 296-155-683 Concrete finishing.

(1) Scaffolds for use of cement finishers must comply with the requirements .of chapter 296-874 WAC, Scaffolds.

(2) Where grinders, chippers, and other equipment is used which creates a thrust force while working on scaffolding, you must securely tie such scaffold to a structure or held in with weighted drop lines.

(3) You must provide grinding and dressing operations carried on within closed rooms, stairwells, elevator shafts, etc., with forced air ventilation.

(4) Grinding machine operators must wear respirators whenever machines are in operation or where dust hazard exists.

(5) Eye protection must be worn by workers engaged in grinding, chipping, or sacking concrete as required by WAC 296-155-215.

[Statutory Authority: RCW 49.17.010, .040, .050, and .060. 16-09-085 (Order 15-08), § 296-155-683, filed 04/19/16, effective, 05/20/16. Statutory Authority: RCW 49.17.010, .040, .050, and .060. 10-11-103 (Order 10-03), § 296-155-683, filed 05/18/10, effective 07/01/10. Statutory Authority: Chapter 49.17.010, .040, .050, .060 RCW. 98-05-046 (Order 97-10), § 296-155-683, filed 2/13/98, effective 4/15/98. Statutory Authority: Chapter 49.17 RCW. 89-11-035 (Order 89-03), § 296-155-683, filed 5/15/89, effective 6/30/89.]

WAC 296-155-684 Requirements for cast in place concrete.

(1) **General requirements for formwork and placing and removal of forms**.

(a) Formwork must be designed, fabricated, erected, supported, braced, and maintained so that it will be capable of supporting without failure all vertical and lateral loads that may reasonably be anticipated to be applied to the formwork. Formwork which is designed, fabricated, erected, supported, braced, and maintained in conformance with the Appendix to this section will be deemed to meet the requirements of this subdivision.

(b) Any form, regardless of size, must be planned in every particular and designed and constructed with an adequate factor of safety. In addition to computable loading, additional form pressures may result from impact during concrete placement, sudden lowering of temperatures retarding the set and increasing the liquid head or static pressure, vibrations of the form or concrete, uneven stressing resulting from failure or weakening of form members, or impact from concrete buckets or placing equipment. As a result, an adequate factor of safety is required to offset these unpredictable conditions.

(c) The thoroughness of planning and design must be governed by the size, complexity, and intended use of the form. Formwork which is complex in nature or which will be subjected to unusually high concrete pressures must be designed or approved for use by an engineer or experienced form designer.

(d) When moved or raised by crane, cableway, A-frame, or similar mechanical device, forms must be securely attached to slings having a minimum safety factor of 5. Use of No. 9 tie wire, fiber rope, and similar makeshift lashing is prohibited.

(e) Taglines must be used in moving panels or other large sections of forms by crane or hoist.

(f) All hoisting equipment, including hoisting cable used to raise and move forms must have a minimum safety factor incorporated in the manufacturer's design, and the manufacturer's recommended loading must not be exceeded. Field-fabricated or shop-fabricated hoisting equipment must be designed or approved by a registered professional engineer, incorporating a minimum safety factor of 5 in its design. Panels and built-up form sections must be equipped with metal hoisting brackets for attachment of slings.

(2) Drawings or plans, including all revisions, for the jack layout, formwork (including shoring equipment), working decks, and scaffolds, must be available at the job site.

(3) **Shoring and reshoring.**

(a) General: Shoring installations constructed in accordance with this standard must be designed in accordance with American National Standard Recommended Practice for Concrete Formwork, ANSI-(ACI 347-78), Formwork for Concrete ACI 318-83, or with the following publications of the Scaffolding & Shoring Institute: Recommended Standard Safety Code for Vertical Shoring, 1970; Single Post Shore Safety Rules, 1969; and Steel Frame Shoring Safety, Safety Rules, 1969.

(b) You must inspect all shoring equipment prior to erection to determine that it is as specified in the shoring layout.

(c) A shoring layout must be prepared or approved by a person qualified to analyze the loadings and stresses which are induced during the construction process.

(d) A copy of the shoring layout must be available at the job site.

(e) The shoring layout must include all details of the specification, including unusual conditions such as heavy beams, sloping areas, ramps, and cantilevered slabs, as well as plan and elevation views.

(f) You must not use shoring equipment found to be damaged such that its strength is reduced to less than that required by WAC 296-155-684 (1)(a) for shoring.

(g) You must inspect erected shoring equipment immediately prior to, during, and immediately after concrete placement.

(h) Upon inspection, you must immediately remove and replace shoring equipment that is found to be damaged or weakened.

(i) The sills for shoring must be sound, rigid, and capable of carrying the maximum intended load without settlement or displacement.

(j) All base plates, shore heads, extension devices, and adjustment screws must be in firm contact, and secured when necessary, with the foundation and the form.

(k) Eccentric loads on shore heads and similar members must be prohibited unless these members have been designed for such loading.

(l) The minimum total design load for any shoring used in slab and beam structures must be not less than 100 pounds per square foot for the combined live and dead load regardless of slab thickness; however, the minimum allowance for live load and formwork must be not less than 20 pounds per square foot in addition to the weight of the concrete. Additional allowance for live load must be added for special conditions other than when placing concrete for standard-type slabs and beams. Shoring must also be designed to resist all foreseeable lateral loads such as wind, cable tensions, inclined supports, impact of placement, and starting and stopping of equipment. The assumed value of load due to wind, impact of concrete, and equipment acting in any direction at each floor line must not be less than 100 pounds per lineal foot of floor edge or two percent of total dead load of the floor, whichever is greater. (See subsection (3)(b) of this section.)

(m) When motorized carts are used, the design load must be increased 25 pounds per square foot.

(4) The design stresses for form lumber and timbers must be within the tolerance of the grade, condition, and species of lumber used.

(5) The design stresses used for form lumber and timber must be shown on all drawings, specifications, and shoring layouts.

(6) All load-carrying timber members of scaffold framing must be a minimum of 1500 f (stress grade) construction grade lumber. All dimensions are nominal sizes except that where rough sizes are noted, only rough or undressed lumber of the size specified must satisfy minimum requirements.

(7) When shoring from soil, an engineer or other qualified person must determine that the soil is adequate to support the loads which are to be placed on it.

(8) You must take precautions so that weather conditions do not change the load-carrying conditions of the soil below the design minimum.

(9) When shoring from fill or when excessive earth disturbance has occurred, an engineer or other qualified person must supervise the compaction and reworking of the disturbed area and determine that it is capable of carrying the loads which are to be imposed upon it.

(10) You must use suitable sills on a pan or grid dome floor or any other floor system involving voids where vertical shoring equipment could concentrate an excessive load on a thin concrete section.

(11) When temporary storage of reinforcing rods, material, or equipment on top of formwork becomes necessary, these areas must be sufficient to meet the loads.

(12) If any deviation in the shoring plan is necessary because of field conditions, you must consult the person who prepared the shoring layout for approval of the actual field setup before concrete is placed.

(13) You must check the shoring setup to ensure that all details of the layout have been met.

(14) The completed shoring setup must be a homogenous unit or units and must have the specified bracing to give it lateral stability.

(15) You must check the shoring setup to make certain that bracing specified in the shoring layout for lateral stability is in place.

(16) All vertical shoring equipment must be plumb. Maximum allowable deviation from the vertical is 1/8 inch in 3 feet. If this tolerance is exceeded, you must not use the shoring equipment until readjusted within this limit.

(17) Upon inspection, you must immediately remove and replace shoring equipment that is found to be damaged or weakened.

(18) You must not release or remove shoring equipment until the approval of a qualified engineer has been received.

(19) You must plan removal of shoring equipment so that the equipment which is still in place is not overloaded.

(20) Slabs or beams which are to be reshored should be allowed to take their actual permanent deflection before final adjustment of reshoring equipment is made.

(21) While the reshoring is underway, you must not permit any construction loads on the partially cured concrete.

(22) You must not exceed the allowable load on the supporting slab when reshoring.

(23) You must thoroughly recheck the reshoring to determine that it is properly placed and that it has the load capacity to support the areas that are being reshored.

[Statutory Authority: RCW 49.17.010, .040, .050, and .060. 16-09-085 (Order 15-08), § 296-155-684, filed 04/19/16, effective, 05/20/16. Statutory Authority: RCWs 47.17.010, 49.17.040, 49.17.050, 49.17.440 and 49.17.060. 12-01-086 (Order 08-32), § 296-155-684, filed 12/20/11, effective 02/01/12. Statutory Authority: Chapter 49.17 RCW. 94-15-096 (Order 94-07), § 296-155-684, filed 7/20/94, effective 9/20/94; 89-11-035 (Order 89-03), § 296-155-684, filed 5/15/89, effective 6/30/89.]

WAC 296-155-685 Tubular welded frame shoring.

(1) Metal tubular frames used for shoring must have allowable loads based on tests conducted according to the Recommended Procedure for Compression Testing of Scaffolds and Shores, Scaffolding & Shoring Institute, 1967.

(2) Design of shoring layouts must be based on allowable loads which were obtained using the test procedures of subsection (1) of this section and on at least a two and one-half to one safety factor.

(3) You must inspect all metal frame shoring equipment before erection.

(4) You must not use metal frame shoring equipment and accessories if heavily rusted, bent, dented, rewelded, or having broken weldments or other defects.

(5) All locking devices on frames and braces must be in good working order, coupling pins must align the frame or panel legs, pivoted cross braces must have their center pivot in place, and all components must be in a condition similar to that of original manufacture.

(6) When checking the erected shoring frames with the shoring layout, the spacing between towers and cross-brace spacing must not exceed that shown on the layout, and all locking devices must be in the closed position.

(7) Devices for attaching the external lateral stability bracing must be securely fastened to the legs of the shoring frames.

(8) All baseplates, shore heads, extension devices, or adjustment screws must be in firm contact with the footing sill and the form material, and must be snug against the legs of the frames.

(9) Eccentric loads on shore heads and similar members are prohibited unless the shore heads have been designed for such loading.

(10) When formwork is installed at an angle, or sloping, or when the surface shored from is sloping, the shoring must be designed for such loading.

(11) Adjustment screws must not be adjusted to raise formwork after the concrete is in place.

[Statutory Authority: RCW 49.17.010, .040, .050, and .060. 16-09-085 (Order 15-08), § 296-155-685, filed 04/19/16, effective, 05/20/16. Statutory Authority: Chapter 49.17 RCW. 89-11-035 (Order 89-03), § 296-155-685, filed 5/15/89, effective 6/30/89; Order 74-26, § 296-155-685, filed 5/7/74, effective 6/6/74.]

WAC 296-155-686 Tube and coupler shoring.

(1) Tube and coupler towers used for shoring must have allowable loads based on tests conducted according to the Recommended Procedure for Compression Testing of Scaffolds and Shores, Scaffolding & Shoring Institute, 1967.

(2) Design of shoring layouts must be based on working loads which were obtained using the test procedures of subsection (1) of this section and on at least a two and one-half to one safety factor.

(3) You must inspect all tube and coupler components before being used.

(4) You must not use tubes of shoring structures if heavily rusted, bent, dented, or having other defects.

(5) You must not use couplers (clamps) if deformed, broken, or having defective or missing threads on bolts, or other defects.

(6) The material used for the couplers (clamps) must be of a structural type such as drop-forged steel, malleable iron, or structural grade aluminum. You must not use gray cast iron.

(7) When checking the erected shoring towers with the shoring layout, the spacing between posts must not exceed that shown on the layout, and all interlocking of tubular members and tightness of couplers should be checked.

(8) All baseplates, shore heads, extension devices, or adjustment screws must be in firm contact with the footing sill and the form material, and must be snug against the posts.

(9) Eccentric loads on shore heads and similar members are prohibited unless the shore heads have been designed for such loading.

(10) You must take special precautions when formwork is at angles, or sloping, or when the surface shored from is sloping.

(11) Adjustment screws must not be adjusted to raise formwork after the concrete is in place.

[Statutory Authority: RCW 49.17.010, .040, .050, and .060. 16-09-085 (Order 15-08), § 296-155-686, filed 04/19/16, effective, 05/20/16. Statutory Authority: Chapter 49.17 RCW. 89-11-035 (Order 89-03), § 296-155-686, filed 5/15/89, effective 6/30/89.]

WAC 296-155-687 Single post shores.

(1) When checking erected single post shores with the shoring layout, the spacing between shores in either direction must not exceed that shown on the layout, and all clamps, screws, pins, and all other components must be in the closed or engaged position.

(2) For stability, single post shores must be horizontally braced in both the longitudinal and transverse directions. You must also install diagonal bracing, You must install bracing as the shores are being erected.

(3) You must securely fasten devices which attach to the external lateral stability bracing to the single post shores.

(4) All baseplates or shore heads of single post shores must be in firm contact with the footing sill and the form material.

(5) Whenever single post shores are used in more than one tier, the layout must be designed and inspected by a structural engineer.

(6) Eccentric loads on shore heads are prohibited unless the shore heads have been designed for such loading.

(7) When formwork is at an angle, or sloping, or when the surface shored from is sloping, the shoring must be designed for such loading.

(8) You must make adjustments of single post shores to raise formwork after concrete is in place.

(9) Respecting fabricated single post shores, the following apply:

(a) The clamp used for adjustable timber single post shores must have working load ratings based on tests conducted according to the standard test procedures for

fabricated single post shores in Recommended Procedure for Compression Testing of Scaffolds and Shores, Scaffolding & Shoring Institute, 1967, and on at least a 3 to one safety factor.

(b) Shoring layouts must be made using working loads which were obtained using the test procedures of (a) of this subsection, and on at least a 3 to one safety factor.

(c) You must inspect all fabricated single post shores before being used.

(d) You must not use fabricated single post shores if heavily rusted, bent, dented, rewelded, or having broken weldments or other defects. If they contain timber, they must not be used if timber is split, cut, has sections removed, is rotted, or otherwise structurally damaged.

(e) All clamps, screws, pins, threads, and all other components must be in a condition similar to that of original manufacture.

(10) Respecting adjustable timber single post shores, the following apply:

(a) The clamp used for adjustable timber single post shores must have working load ratings based on tests conducted according to the standard test procedures for fabricated single post shores in Recommended Procedure for Compression Testing of Scaffolds and Shores, Scaffolding & Shoring Institute, 1967, and on at least a three to one safety factor.

(b) Timber used must have the safety factor and allowable working load for each grade and species as recommended in the Tables for wooden columns in the Wood Structural Design Data Book, National Forest Products Association, 1970.

(c) The shoring layout must be made using the allowable load obtained by using the test procedure for the clamp or Tables for timber referred to in (a) and (b) of this subsection.

(d) You must inspect all timber and adjusting devices to be used for adjustable timber single post shores before erection.

(e) You must not use timber if it is split, cut, has sections removed, is rotted, or is otherwise structurally damaged.

(f) You must not use adjusting devices if heavily rusted, bent, dented, rewelded, or having broken weldments or other defects.

(g) All nails used to secure bracing on adjustable timber single post shores must be driven home and the point of the nail bent over.

(11) Respecting timber single post shores, the following must apply:

(a) Timber used as single post shores must have the safety factor and allowable working load for each grade and species as recommended in the Tables for wooden columns in the Wood Structural Design Data Book, National Forest Products Association, 1970.

(b) You must prepare the shoring layout by using working loads obtained by using the Tables referred to in (a) of this subsection.

(c) You must inspect all timber to be used for single post shoring before erection.

(d) You must not use timber if it is split, cut, has sections removed, is rotted, or is otherwise structurally damaged.

(e) All nails used to secure bracing on timber single post shores must be driven home and the point of the nail bent over.

(12) Tiered single post shores. Whenever single post shores are used one on top of another (tiered), you must comply with the following specific requirements in addition to the general requirements for formwork:

(a) The design of the shoring must be prepared by a qualified designer and the erected shoring must be inspected by an engineer qualified in structural design.

(b) The single post shores must be vertically aligned.

(c) The single post shores must be spliced to prevent misalignment.

(d) The single post shores must be adequately braced in two mutually perpendicular directions at the splice level. Each tier must also be diagonally braced in the same two directions.

(e) Adjustment of single post shores to raise formwork must not be made after the placement of concrete.

(f) Reshoring must be erected, as the original forms and shores are removed, whenever the concrete is required to support loads in excess of its capacity.

[Statutory Authority: RCW 49.17.010, .040, .050, and .060. 16-09-085 (Order 15-08), § 296-155-687, filed 04/19/16, effective, 05/20/16. Statutory Authority: Chapter 49.17 RCW. 89-11-035 (Order 89-03), § 296-155-687, filed 5/15/89, effective 6/30/89.]

WAC 296-155-688 Vertical slip forms.

(1) Slip forms must be designed and constructed, and the form movement carried out, under the immediate supervision of a person or persons experienced in slip form design and operation. Drawings prepared by a qualified engineer, showing the jack layout, formwork, working decks, and scaffolding, must be available at the job site, and followed.

(2) The steel rods or pipe on which the jacks climb or by which the forms are lifted must be designed for this purpose. Such rods must be adequately braced where not encased in concrete.

(3) Forms must be designed to prevent excessive distortion of the structure during the jacking operation.

(4) Vertical slip forms must be provided with scaffolding or work platforms completely encircling the area of placement.

(5) Jacks and vertical supports must be positioned in such a manner that the loads do not exceed the rated capacity of the jacks.

(6) The jacks or other lifting devices must be provided with mechanical dogs or other automatic holding devices to support the slip forms whenever failure of the power supply or lifting mechanism occurs.

(7) The form structure must be maintained within all design tolerances specified for plumbness during the jacking operation.

(8) Lifting must proceed steadily and uniformly and must not exceed the predetermined safe rate of lift. A jacking system, which provides precise, simultaneous movement of the entire form in small preselected increments, is recommended for large structures.

(9) Workers placing reinforcing steel must comply with the requirements of chapter 296-155 WAC, Part C-1 when working above the scaffold level.

(10) The total allowable load on slip form platforms must be determined by the design engineer and enforced by the field supervisor.

(11) Lateral and diagonal bracing of the forms must be provided to prevent excessive distortion of the structure during the sliding operation.

(12) While the slide is in operation, the form structure must be maintained in line and plumb.

(13) A field supervisor experienced in slip form construction must be present on the deck at all times.

[Statutory Authority: RCW 49.17.010, .040, .050, and .060. 16-09-085 (Order 15-08), § 296-155-688, filed 04/19/16, effective, 05/20/16. Statutory Authority: Chapter 49.17.010, .040, .050, .060 RCW. 98-05-046 (Order 97-10), § 296-155-688, filed 2/13/98, effective 4/15/98. Chapter 49.17 RCW. 91-03-044 (Order 90-18), § 296-155-688, filed 1/10/91, effective 2/12/91; 89-11-035 (Order 89-03), § 296-155-688, filed 5/15/89, effective 6/30/89.]

WAC 296-155-689 Placing and removal of forms.

(1) When moved or raised by crane, cableway, A-frame, or similar mechanical device, forms must be securely attached to slings having a minimum safety factor of 5. Use of No. 9 tie wire, fiber rope, and similar makeshift lashing is prohibited.

(2) You must use taglines in moving panels or other large sections of forms by crane or hoist.

(3) All hoisting equipment, including hoisting cable used to raise and move forms must have a minimum safety factor incorporated in the manufacturer's design, and the manufacturer's recommended loading must not be exceeded. Field-fabricated or shop-fabricated hoisting equipment must be designed or approved by a registered professional engineer, incorporating a minimum safety factor of 5 in its design. Panels and built-up form sections must be equipped with metal hoisting brackets for attachment of slings.

(4) Forms intended for use where there is a free fall of over 10 feet must be equipped with adequate scaffolding and guardrails, or employees working on the forms must be protected from falls in accordance with chapter 296-155 WAC, Part C-1 during forming and stripping operations.

(5) You must not release vertical forms being raised or removed in sections until adequately braced or secured. You must not release overhead forms until adequately braced or secured.

(6) You must protect workers or others at lower levels from falling materials. You must erect appropriate warning signs along walkways.

(7) You must not remove forms until the concrete is cured. The concrete must be adequately set in order to permit safe removal of the forms, shoring, and bracing. You must adhere to engineer's specifications and local building codes in determining the length of time forms should remain in place following concrete placement. In addition, you must perform tests on field-cured concrete specimens in order to insure that concrete has obtained sufficient strength to safely support the load prior to removal of forms.

[Statutory Authority: RCW 49.17.010, .040, .050, and .060. 16-09-085 (Order 15-08), § 296-155-689, filed 04/19/16, effective, 05/20/16. Statutory Authority: Chapter 49.17.010, .040, .050, .060 RCW. 98-05-046 (Order 97-10), § 296-155-689, filed 2/13/98, effective 4/15/98. Chapter 49.17 RCW. 91-03-044 (Order 90-18), § 296-155-689, filed 1/10/91, effective 2/12/91; 89-11-035 (Order 89-03), § 296-155-689, filed 5/15/89, effective 6/30/89.]

WAC 296-155-690 Appendix to WAC 296-155-684 cast in place concrete.

General requirements for formwork.

(This Appendix is nonmandatory.)

This Appendix serves as a nonmandatory guideline to assist employers in complying with the formwork requirements in WAC 296-155-684 (1)(a). Formwork which has been designed, fabricated, erected, braced, supported, and maintained in accordance with Sections 6 and 7 of the American National Standard for Construction and Demolition Operations-Concrete and Masonry Work, ANSI A10.9-1983, must be deemed to be in compliance with the provision of WAC 296-155-684 (1)(a).

[Statutory Authority: RCW 49.17.010, .040, .050, and .060. 16-09-085 (Order 15-08), § 296-155-690, filed 04/19/16, effective, 05/20/16. Statutory Authority: Chapter 49.17 RCW. 90-03-029 (Order 89-20), § 296-155-690, filed 1/11/90, effective 2/26/90; 89-11-035 (Order 89-03), § 296-155-690, filed 5/15/89, effective 6/30/89. Statutory Authority: RCW 49.17.040 and 49.17.050. 86-03-074 (Order 86-14), § 296-155-690, filed 1/21/86; Order 74-26, § 296-155-690, filed 5/7/74, effective 6/6/74.]

WAC 296-155-691 Precast concrete and tilt-up operations.

(1) It must be the responsibility of the contractor to use accessories which are designed to be compatible.

(2) You must know the design capacity of all lifting devices and accessories. You must use the devices and accessories with the appropriate capacity.

(3) Prior to pouring the panels of a tilt-up type construction job, a set of plans or job specifications, including lifting procedures.

(a) These plans must be at the job site and made available upon request.

(b) Any changes made in the rigging procedure of a tilt-up panel or slab must provide the same degree of safety as required by the original plans.

(c) The plans or specifications must contain the following information:

(i) The type, size, and location of all lifting inserts.

(ii) The type, size, and location of all brace inserts or fittings for guy wires in each panel and floor or support.

(iii) The size of braces or guys to be used.

(iv) The compression strength which concrete panels must attain prior to being lifted.

(4) You must include the following conditions in the erection process and incorporate them in the design plan:

(a) Braces and all associated components of the bracing system must be designed to incorporate a safety factor of one and one-half to resist any normal stresses to which they may be subjected, including normal high wind velocity pressures for the area.

(b) Precast concrete wall units, structural framing, and tilt-up wall panels must be adequately supported to prevent overturning and to prevent collapse until permanent connections are completed.

(c) Floor braces used to secure panel sections must be placed at an angle of not less than 45 degrees or more than 60 degrees from horizontal when physically possible to install in this manner.

(d) The bracing on all panel sections must be installed in such a manner as to prevent the panel from accidentally rotating.

(e) Each panel section not secured by other means must have a minimum of two braces. The braces must be installed in such a manner as to evenly distribute the load or guy wires, when properly installed, may be used in lieu of stiff leg braces.

(f) If braces are attached to a panel or slab by bolts tightened into inserts installed in holes drilled in concrete, the type of inserts used and method of installation must be such as to develop the required strength to be maintained for the bracing system.

(g) Inserts to be installed for lifting sections of tilt-up precast panels must be designed mechanically to maintain a safety factor of 3.

(h) Lifting inserts which are embedded or otherwise attached to precast concrete members, other than the tilt-up members, must be capable of supporting at least 4 times the maximum intended load applied or transmitted to them.

(i) The compression strength of the concrete must be such that when the proper type, size, and amount of inserts are installed a minimum safety factor of two will be maintained.

(j) Lifting hardware must be capable of supporting at least 5 times the maximum intended load applied or transmitted to the lifting hardware.

(k) You must discard lifting bolts or other lifting devices which have been bent, worn, or are defective.

(l) The upper and lower sections of telescoping type braces must be secured by high tensile steel pins or bolts which provide adequate shear strength and which will positively secure against accidental removal.

(m) You must not alter manufactured products in a manner which would reduce the safe working load to less than its original value.

(n) You must position inserts so that bolts, or lifting devices, when inserted, will be perpendicular to the face on which they are placed.

(5) Design of the panels and layout of the pour must be made in such a manner so that when picking, the top of the panel will be away from the crane. If this is not possible, the contractor must consult with a representative of the department and the crane company involved to determine the procedure to be followed in lifting and placing in its permanent position safely. You must life and handle panels in such a manner that they will not strike the hoisting equipment, in case of failure.

(a) Physical stops must be provided which will prevent the bottom edge of a panel being set from slipping off the edge of its supporting structure.

(b) You must not set tilt-up panels when there is a possibility that wind velocity would create a hazardous condition.

(c) You must designate a qualified signalperson and they must with the crane operator on lifting procedures prior to making the pick. The signalperson must be located in such a position during the pick of the panel that they can observe both the crane operator and the employees working in the immediate area.

(d) During the lifting process, workers must keep clear of the underside of the panel.

(e) You must keep people not involved in the lifting process clear of the hazardous area near where panels are being raised, moved or placed.

(f) If braces must be removed temporarily during construction, you must provide other effective means to safely support the panel during the interim period.

(g) You must properly brace or otherwise secure each panel prior to removal of the hoisting equipment.

(h) You must properly shore short panels or sections not otherwise supported by floor, footings, columns or other structure.

[Statutory Authority: RCW 49.17.010, .040, .050, and .060. 16-09-085 (Order 15-08), § 296-155-691, filed 04/19/16, effective, 05/20/16. Statutory Authority: Chapter 49.17 RCW. 94-15-096 (Order 94-07), § 296-155-691, filed 7/20/94, effective 9/20/94; 90-17-051 (Order 90-10), § 296-155-691, filed 8/13/90, effective 9/24/90; 89-11-035 (Order 89-03), § 296-155-691, filed 5/15/89, effective 6/30/89.]

WAC 296-155-694 Requirements for lift-slab construction operations.

(1) Lift-slab operations must be designed and planned by a registered professional engineer who has experience in lift-slab construction. You must implement such plans and designs and they must include detailed instructions and sketches indicating the prescribed method of erection. These plans and designs must also include provisions for ensuring lateral stability of the building/structure during construction.

(2) Jacks/lifting units must be marked to indicate their rated capacity as established by the manufacturer.

(3) You must not load jacks/lifting units beyond their rated capacity as established by the manufacturer.

(4) Jacking equipment must be capable of supporting at least two and one-half times the load being lifted during jacking operations and you must not overload the equipment. For the purpose of this provision, jacking equipment includes any load bearing component which is used to carry out the lifting operation(s). Such equipment includes, but is not limited to, the following: Threaded rods, lifting attachments, lifting nuts, hook-up collars, T-caps, shearheads, columns, and footings.

(5) Jacks/lifting units must be designed and installed so that they will neither lift nor continue to lift when they are loaded in excess of their rated capacity.

(6) Jacks/lifting units must have a safety device installed which will cause the jacks/lifting units to support the load in any position in the event any jack/lifting unit malfunctions or loses its lifting ability.

(7) Jacking operations must be synchronized in such a manner to ensure even and uniform lifting of the slab. During lifting, you must keep all points at which the slab is supported within 1/2 inch of that needed to maintain the slab in a level position.

(8) If leveling is automatically controlled, a device must be installed that will stop the operation when the 1/2 inch tolerance set forth in subsection (7) of this section is exceeded or where there is a malfunction in the jacking (lifting) system.

(9) If leveling is maintained by manual controls, such controls must be located in a central location and attended by a competent person while lifting is in progress. In addition to meeting the definition in WAC 296-155-012(4), the competent person must be experienced in the lifting operation and with the lifting equipment being used.

(10) You must limit the maximum number of manually controlled jacks/lifting units on one slab to a number that will permit the operator to maintain the slab level within specified tolerances of subsection (7) of this section, but in no case must that number exceed 14.

(11) You must not permit any employee, except those essential to the jacking operation, in the building/structure while any jacking operation is taking place unless the building/structure has been reinforced sufficiently to ensure its integrity during erection. The phrase "reinforced sufficiently to ensure its integrity" used in this subsection means that a registered professional engineer, independent of the engineer who designed and planned the lifting operation, has determined from the plans that if there is a loss of support at any jack location, that loss will be confined to that location and the structure as a whole will remain stable.

(a) Under no circumstances, must you permit any employee who is not essential to the jacking operation to be immediately beneath a slab while it is being lifted.

(b) For the purpose of subsection (11) of this section, a jacking operation begins when a slab or group of slabs is lifted and ends when such slabs are secured (with either temporary connections or permanent connections).

(c) Employers who comply with Appendix A to WAC 296-155-694 are considered to be in compliance with the provisions of subsections (11) through (11)(c) of this section.

(12) When making temporary connections to support slabs, you must secure wedges by tack welding, or an equivalent method of securing the wedges to prevent them from falling out of position. Lifting rods may not be released until the wedges at that column have been secured.

(13) All welding on temporary and permanent connections must be performed by a certified welder, familiar with the welding requirements specified in the plans and specifications for the lift-slab operation.

(14) You must not execute load transfer from jack/lifting units to building columns until the welds on the column shear plates (weld blocks) are cooled to air temperature.

(15) You must positively secure jack/lifting units to building columns so that they do not become dislodged or dislocated.

(16) Equipment must be designed and installed so that the lifting rods cannot slip out of position you must institute other measures, such as the use of locking or blocking devices, which will provide positive connection between the lifting rods and attachments and will prevent components from disengaging during lifting operations.

Appendix to WAC 296-155-694-Lift-slab operations

(This appendix is nonmandatory.)

In WAC 296-155-694(11), WISHA requires employees to be removed from the building/structure during jacking operations unless an independent registered professional engineer, other than the engineer who designed and planned the lifting operation, has determined that the building/structure has been sufficiently reinforced to insure the integrity of the building/structure. One method to comply with this provision is for the employer to ensure that continuous bottom steel is provided in every slab and in both directions through every wall or column head area. (**Column head area** means the distance between lines that are one and one half times the thickness of the slab or drop panel. These lines are located outside opposite faces of the outer edges of the shearhead sections-See Figure 1.) The amount of bottom steel must be established by assuming loss of support at a given lifting jack and then determining the steel necessary to carry, by catenary action over the span between surrounding supports, the slab service dead load plus any service dead and live loads likely to be acting on the slab during jacking. In addition, the surrounding supports must be capable of resisting any additional load transferred to them as a result of the loss of support at the lifting jack considered.

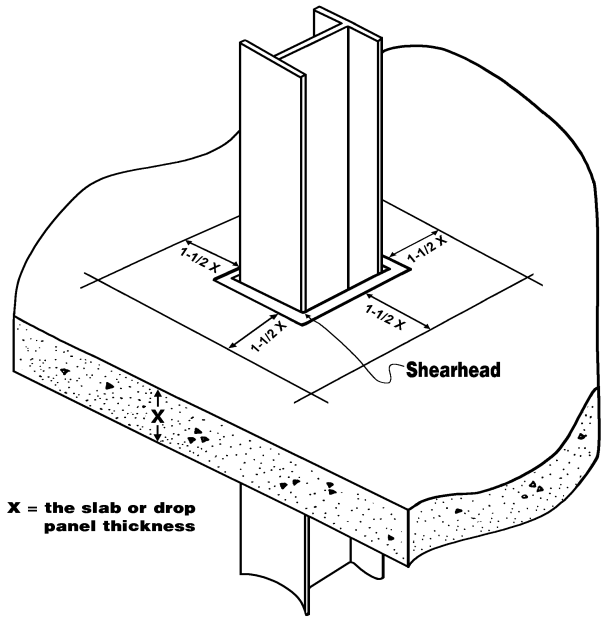

Figure 1 -- Column Head Area

[Statutory Authority: RCW 49.17.010, .040, .050, and .060. 16-09-085 (Order 15-08), § 296-155-694, filed 04/19/16, effective, 05/20/16. Statutory Authority: Chapter 49.17 RCW and RCW 49.17.040, [49.17].050 and [49.17].060. 92-22-067 (Order 92-06), § 296-155-694, filed 10/30/92, effective 12/8/92. Statutory Authority: Chapter 49.17 RCW. 91-11-070 (Order 91-01), § 296-155-694, filed 5/20/91, effective 6/20/91; 90-03-029 (Order 89-20), § 296-155-694, filed 1/11/90, effective 2/26/90; 89-11-035 (Order 89-03), § 296-155-694, filed 5/15/89, effective 6/30/89.]

WAC 296-155-695 Miscellaneous concrete construction.

(1) **General provisions.**

(a) Deadheads used in post tensioning of tendons must be the type that will increase the grip on the cable as the tension is increased.

(b) Proper means and equipment must be used to prevent the over-tensioning of the tendons.

(c) Only qualified workers must perform this type work.

(2) **Prestressed and poststressed concrete operations.**

(a) Anchor fitting. In utilizing anchor fittings for tensioned strands, the recommendations and instructions of the supplier concerning installation, maintenance, and replacement must be followed.

(b) You must keep tools and strand vices clean and in good repair.

(c) Safety factor.

(i) Expendable strand deflection devices used to pretension concrete members must have a minimum safety factor of two.

(ii) Reusable strand deflection devices must have a minimum safety factor of 3.

(d) Jacking operations.

(i) During jacking operations of any tensioning element or group of tensioning elements, you must keep the anchors turned up close to the anchorplate.

(ii) You must not permit anyone to stand in line or directly over the jacking equipment during tensioning operations.

(iii) Employees must not stand behind the jack during tensioning operations.

(e) Jacking and pulling equipment. You must frequently inspect headers, bolts, and hydraulic rams for indication of fatigue, and the threads on bolts and nuts inspected for diminishing cross section.

(f) Storage. You must store stressed members on a level base and adequately supported during storage and transportation to prevent tipping.

(g) Rigging.

(i) You must handle stressed members at pick points specifically designated on the manufacturer's drawings.

(ii) You must lift stressed members with lifting devices recommended by the manufacturer or the engineer in charge.

(iii) You must not allow anyone under stressed members during lifting and erection.

[Statutory Authority: RCW 49.17.010, .040, .050, and .060. 16-09-085 (Order 15-08), § 296-155-695, filed 04/19/16, effective, 05/20/16. Statutory Authority: Chapter 49.17 RCW. 89-11-035 (Order 89-03), § 296-155-695, filed 5/15/89, effective 6/30/89. Statutory Authority: RCW 49.17.040 and 49.17.050. 86-03-074 (Order 86-14), § 296-155-695, filed 1/21/86; Order 74-26, § 296-155-695, filed 5/7/74, effective 6/6/74.]

WAC 296-155-697 Requirements for masonry construction.

(1) You must establish a limited access zone whenever a masonry wall is being constructed. The limited access zone must conform to the following:

(2) You must establish the limited access zone prior to the start of construction of the wall.

(3) The limited access zone must be equal to the height of the wall to be constructed plus 4 feet, and must run the entire length of the wall.

(4) You must establish the limited access zone on the side of the wall which will be unscaffolded.

(5) You must restrict entry into the limited access zone to only employees actively engaged in constructing the wall. You must not permit any other employees to enter the zone.

(6) The limited access zone must remain in place until the wall is adequately supported to prevent overturning and to prevent collapse unless the height of wall is over 8 feet, in which case, the limited access zone must remain in place until the requirements of subsection (7) of this section have been met.

(7) All masonry walls over 8 feet in height must be adequately braced to prevent overturning and to prevent collapse unless the wall is adequately supported so that it will not overturn or collapse. The bracing must remain in place until permanent supporting elements of the structure are in place.

(8) Employees engaged in cutting or chipping must wear suitable eye protection in accordance with WAC 296-155-215.

(9) You must construct, guard, and operate masonry saws in accordance with WAC 296-155-367 (1) through (4).

(10) Persons charged with operation of derricks used for stone setting must be qualified in that type of work.

(11) Stone must be set directly on the wall by the derrick.

(12) Breast derricks when used in setting stone must be secured against a slip or kick back and guyed with wire cables. Provide hold down line to prevent derrick from falling back.

(13) Stone cutters must wear goggles while trimming stone or cutting holes.

(14) You must test pins for security before stone is hoisted.

(15) You must protect hoisting cables from chafing and wearing over corners.

(16) Mason's mortar mixers must have a bar-type grill installed over the mixer opening. The guard must be installed with an automatic disconnect switch to stop the mixer tub rotation and prevent the mixer from starting whenever the guard is not in place.

[Statutory Authority: RCW 49.17.010, .040, .050, and .060. 16-09-085 (Order 15-08), § 296-155-697, filed 04/19/16, effective, 05/20/16. Statutory Authority: Chapter 49.17 RCW. 90-17-051 (Order 90-10), § 296-155-697, filed 8/13/90, effective 9/24/90; 90-03-029 (Order 89-20), § 296-155-697, filed 1/11/90, effective 2/26/90; 89-11-035 (Order 89-03), § 296-155-697, filed 5/15/89, effective 6/30/89.]

WAC 296-155-699 Appendix A to Part O-References to Part O of chapter 296-155 WAC.

(This Appendix is nonmandatory.)

The following nonmandatory references provide information which can be helpful in understanding and complying with the requirements contained in Part O.

- Accident Prevention Manual for Industrial Operations; 8th Edition; National Safety Council.
- Building Code Requirements for Reinforced Concrete (ACI 318-83).
- Formwork for Concrete (ACI SP-4).
- Recommended Practice for Concrete Formwork (ACI 347-78).
- Safety Requirements for Concrete and Masonry Work (ANSI A10.9-1983).
- Standard Test Method for Compressive Strength of Cylindrical Concrete Specimens(ASTM C39-86).
- Standard Test Method for Making and Curing Concrete Test Specimens in the Field(ASTM C31-85).
- Standard Test Method for Penetration Resistance of Hardened Concrete (ASTM C803-82).
- Standard Test Method for Compressive Strength of Concrete Cylinders Cast In-Place in Cylindrical Molds (ASTM C873-85).
- Standard Method for Developing Early Age Compressive Test Values and Projecting Later Age Strengths (ASTM C918-80).

- Recommended Practice for Inspection and Testing Agencies for Concrete, Steel and Bituminous Materials as Used in Construction (ASTM E329-77).
- Method of Making and Curing Concrete Test Specimens in the Laboratory (ASTM C192-88).
- Methods of Obtaining and Testing Drilled Cores and Sawed Beams of Concrete (ASTM C42-87).
- Methods of Securing, Preparing and Testing Specimens from Hardened Lightweight Insulating Concrete for Compressive Strength (ASTM C513-86).
- Test Method for Comprehensive Strength of Lightweight Insulating Concrete(ASTM C495-86).
- Method of Making, Accelerating Curing, and Testing of Concrete Compression Test Specimens (ASTM C684-81).
- Test Method for Compressive Strength of Concrete Using Portions of Beams Broken in Flexure (ASTM C116-68 (1980)).

[Statutory Authority: Chapter 49.17 RCW. 94-15-096 (Order 94-07), § 296-155-699, filed 7/20/94, effective 9/20/94; 89-11-035 (Order 89-03), § 296-155-699, filed 5/15/89, effective 6/30/89.]

PART P
STEEL ERECTION

LAST UPDATED: 05/20/2016

WAC 296-155-701 Scope. 1

WAC 296-155-702 Definitions..... 4

WAC 296-155-703 Site layout, site-specific erection plan and construction sequence. 7

WAC 296-155-704 Hoisting and rigging. 8

WAC 296-155-706 Structural steel assembly..... 11

WAC 296-155-707 Column anchorage..... 13

WAC 296-155-708 Beams and columns. 14

WAC 296-155-709 Open web steel joists. 15

WAC 296-155-711 Systems-engineered metal buildings..... 21

WAC 296-155-714 Falling object protection. 22

WAC 296-155-716 Fall protection. 22

WAC 296-155-717 Training. 23

WAC 296-155-72401 Appendix A-Guidelines for establishing the components of a site-specific erection plan: Nonmandatory guidelines for complying with WAC 296-155-703(5). 24

WAC 296-155-72402 Appendix B: Acceptable test methods for testing slip-resistance of walking/working surfaces. 25

WAC 296-155-72403 Appendix C-Training: Nonmandatory guidelines for complying with WAC 296-155-717. 25

WAC 296-155-72404 Appendix D-Perimeter columns: 26

WAC 296-155-72405 Appendix E-Double connections: 26

WAC 296-155-72406 Appendix F-Typical installations for bridging: 27

WAC 296-155-701 Scope.

(1) (a) This part applies to employers involved in the construction, alteration and repair of single or multistory buildings, bridges, and a variety of other structures. This part applies to employers involved in steel erection unless specifically excluded.

(b) Examples of steel erection structures include, but are not limited to:

Aerialways;	Aerospace facilities and structures;
Air and cable supported structures;	Amphitheaters;
Amusement park structures and rides;	Aqueducts;
Artistic and monumental structures;	Atriums;
Auditoriums;	Balconies;
Billboards;	Bins;
Bridges;	Canopies;
Car dumpers;	Catwalks;
Chemical process structures;	Conveyor supports and related framing;
Conveyor systems;	Cranes and craneways;
Curtain walls;	Draft curtains;
Elevator fronts;	Energy exploration structures;
Energy production, transfer and storage structures and facilities;	Entrances;
Fire containment structures;	Fire escapes;
Furnaces;	Geodesic domes;
Hi-bay structures;	Hoppers;
Industrial structures;	Lift slab/tilt-up structures;
Light towers;	Malls;
Metal roofs;	Mills;
Monorails;	Ovens;
Overpasses;	Penthouses;
Platforms;	Power plants;
Racks and rack support structures and frames;	Radar and communication structures;

Rail, marine and other transportation structures;	Scoreboards;
Signage;	Single and multistory buildings;
Skylights;	Sound barriers;
Space frames;	Stackers/reclaimers;
Stacks;	Stadiums;
Stair towers;	Stairways;
Store fronts;	Systems-engineered metal buildings;
Trestles;	Underpasses;
Viaducts;	Water process and water containment structures; and
Window walls.	

(2) (a) Covered steel erection work includes the:

- Hoisting, laying out, placing, connecting, welding, burning, guying, bracing, bolting, plumbing and rigging of structural steel, steel joists, and metal buildings; and
- Installing metal decking, curtain walls, window walls, siding systems, miscellaneous metals, ornamental iron and similar materials.

(b) The following work is also covered by this part when done during, and are a part of, steel erection work:

Anchoring devices;	Building equipment;
Building specialties;	Cable stays;
Castings;	Cold formed steel framing;
Column covers;	Conveying systems;
Crane rails and accessories;	Detention or security equipment and doors, windows and hardware;
Doors; windows;	Elevator beams;
Enclosures and pockets;	Falsework for temporary supports of permanent steel members;
Fascias;	Fences and gates;
Ferrous metals and alloys;	Floor plates;
Gaskets;	Glass;
Gratings;	Grillage;
Handrails;	Hardware;

Hydraulic structures;	Joint fillers;
Ladders;	Louvers;
Metal decking and raceway systems and accessories;	Metal panels and panel wall systems;
Metal roofing and accessories;	Metal siding; bridge flooring;
Miscellaneous, architectural and ornamental metals and metal work;	Multipurpose supports;
Nonferrous metals and alloys;	Ornamental iron work, expansion control including bridge expansion joint assemblies;
Penthouse enclosures;	Perforated metals;
Permanent and temporary bents and towers;	Plastics and synthetic composite materials;
Railings;	Rigging, hoisting, laying out, placing, connecting, guying, bracing, dismantling, burning, welding, bolting, grinding, sealing, caulking, and all related activities for construction, alteration and/or repair of materials and assemblies such as structural steel;
Safety systems for steel erection;	Sealants and seals;
Sheet metal fabrications;	Shelf racks;
Skylights;	Slide bearings;
Soffit panels;	Stairs;
Steel and metal joists;	Stone and other nonprecast concrete architectural materials mounted on steel frames;
Structural cabling;	Structural metal framing and related bracing and assemblies; and
Trench covers.	

(3) Controlling contractor duties are specified in WAC 296-155-703 (1) and (3), 296-155-707 (2)(b), 296-155-714(2), and 296-155-716(5).

[Statutory Authority: RCW 49.17.010, .040, .050. 02-13-115 (Order 01-36), § 296-155-701, filed 06/19/02, effective 09/01/02].

WAC 296-155-702 Definitions.

Anchored bridging. The steel joist bridging is connected to a bridging terminus point.

Bolted diagonal bridging. Diagonal bridging that is bolted to a steel joist or joists.

Bridging clip. A device that is attached to the steel joist to allow the bolting of the bridging to the steel joist.

Bridging terminus point. A wall, a beam, tandem joists (with all bridging installed and a horizontal truss in the plane of the top chord) or other element at an end or intermediate point(s) of a line of bridging that provides an anchor point for the steel joist bridging.

Choker. A wire rope or synthetic fiber rigging assembly that is used to attach a load to a hoisting device.

Cold forming. The process of using press brakes, rolls, or other methods to shape steel into desired cross sections at room temperature.

Column. A load-carrying vertical member that is part of the primary skeletal framing system. Columns do not include posts.

Competent person (also defined in WAC 296-155-012). One who can identify existing or predictable hazards in the surroundings or working conditions which are unsanitary, hazardous, or dangerous to employees, and who has authorization or authority by nature of their position to take prompt corrective measures to eliminate them. The person must be knowledgeable of the requirements of this part.

Connector. Someone who, working with hoisting equipment, is placing and connecting structural members and/or components.

Constructibility. The ability to erect structural steel members in accordance with this part without having to alter the overall structural design.

Construction load (for joist erection). Any load other than the weight of the employee(s), the joists and the bridging bundle.

Controlled load-lowering. Lowering a load by means of a mechanical hoist drum device that allows a load to be lowered with maximum control using the gear train or hydraulic components of the hoist mechanism. Controlled load lowering requires the use of the hoist drive motor, rather than the load hoist brake, to lower the load.

Controlling contractor. A prime contractor, general contractor, construction manager or any other legal entity that has the overall responsibility for the construction of the project--its planning, quality and completion.

Critical lift. A lift that:

- Exceeds 75% of the crane or derrick rated load chart capacity; or
- Requires the use of more than one crane or derrick.

Derrick floor. An elevated floor of a building or structure that has been designated to receive hoisted pieces of steel prior to final placement.

Double connection. An attachment method where the connection point is intended for two pieces of steel that share common bolts on either side of a central piece.

Double connection seat. A structural attachment that, during the installation of a double connection, supports the first member while the second member is connected.

Employee (and other terms of like meaning, unless the context of the provision containing such a term indicates otherwise). An employee of an employer who is employed in the business of their employer whether by way of manual labor or otherwise and every person in this state who is engaged in the employment of or who is working under an independent contract the essence of which is personal labor for an employer under this standard whether by way of manual labor or otherwise.

Employer. Any person, firm, corporation, partnership, business trust, legal representative, or other business entity which engages in any business, industry, profession, or activity in this state and employs one or more employees or who contracts with one or more persons, the essence of which is the personal labor of such person or persons and includes the state, counties, cities, and all municipal corporations, public corporations, political subdivisions of the state, and charitable organizations: Provided, That any persons, partnership, or business entity not having employees, and who is covered by the Industrial Insurance Act must be considered both an employer and an employee.

Erection bridging. The bolted diagonal bridging that is required to be installed prior to releasing the hoisting cables from the steel joists.

Final interior perimeter. The perimeter of a large permanent open space within a building such as an atrium or courtyard. This does not include openings for stairways, elevator shafts, etc.

Floor hole (decking hole). An opening measuring less than 12 inches but more than one inch in its least dimension in any floor, roof, or platform through which materials but not persons may fall, such as a belt hole, pipe opening, or slot opening.

Girt (in systems-engineered metal buildings). A “Z” or “C” shaped member formed from sheet steel spanning between primary framing and supporting wall material.

Headache ball. A weighted hook that is used to attach loads to the hoist load line of the crane.

Hoisting equipment. Lifting equipment designed to lift and position a load of known weight to a location at some known elevation and horizontal distance from the equipment's center of rotation. Hoisting equipment includes, but not limited to:

- Cranes;
- Derricks;
- Tower cranes;
- Barge-mounted derricks or cranes;
- Gin poles; and
- Gantry hoist systems.

Note:	*A come-a-long (a mechanical device, usually consisting of a chain or cable attached at each end, that is used to facilitate movement of materials through leverage) is not considered hoisting equipment.*

Metal decking. A commercially manufactured, structural grade, cold rolled metal panel formed into a series of parallel ribs and includes metal floor and roof decks, standing seam metal roofs, other metal roof systems and other products such as bar gratings, checker plate, expanded metal panels, and similar products. After installation and proper fastening, these decking materials serve a combination of functions including: A structural element designed in combination with the structure to resist, distribute and transfer loads, stiffen the structure and provide a diaphragm action; a walking/working surface; a form for concrete slabs; a support for roofing systems; and a finished floor or roof.

Multiple lift rigging. A rigging assembly manufactured by wire rope rigging suppliers that facilitates the attachment of up to five independent loads to the hoist rigging of a crane.

Must. Mandatory.

Permanent floor. A structurally completed floor at any level or elevation (including slab on grade).

Post. A structural member with a longitudinal axis that is essentially vertical, that:

- Weighs 300 pounds or less and is axially loaded (a load presses down on the top end); or
- Is not axially loaded, but is laterally restrained by the above member. Posts typically support stair landings, wall framing, mezzanines and other substructures.

Project structural engineer of record. The registered, licensed professional responsible for the design of structural steel framing and whose seal appears on the structural contract documents.

Purlin (in systems-engineered metal buildings). A “Z,” “C,” or “W” shaped member formed from sheet steel spanning between primary framing and supporting roof material.

Qualified person. One who, by possession of a recognized degree, certificate, or professional standing, or who by extensive knowledge, training, and experience, has successfully demonstrated the ability to solve or resolve problems relating to the subject matter, the work, or the project.

Safety deck attachment. An initial attachment that is used to secure an initially placed sheet of decking to keep proper alignment and bearing with structural support members.

Shear connector. Headed steel studs, steel bars, steel lugs, and similar devices which are attached to a structural member for the purpose of achieving composite action with concrete.

Steel erection. The construction, alteration or repair of steel buildings, bridges and other structures, including the installation of metal decking and all planking used during the process of erection.

Steel joist. An open web, secondary load-carrying member of 144 feet (43.9 m) or less, designed by the manufacturer, used for the support of floors and roofs. This does not include structural steel trusses or cold-formed joists.

Steel joist girder. An open web, primary load-carrying member, designed by the manufacturer, used for the support of floors and roofs. This does not include structural steel trusses.

Steel truss. An open web member designed of structural steel components by the project structural engineer of record. For the purposes of this subpart, a steel truss is considered equivalent to a solid web structural member.

Structural steel. A steel member, or a member made of a substitute material (such as, but not limited to, fiberglass, aluminum or composite members). These members include, but are not limited to, steel joists, joist girders, purlins, columns, beams, trusses, splices, seats, metal decking, girts, and all bridging, and cold formed metal framing which is integrated with the structural steel framing of a building.

Systems-engineered metal building. A metal, field-assembled building system consisting of framing, roof and wall coverings. Typically, many of these components are cold-formed shapes. These individual parts are fabricated in one or more manufacturing facilities and shipped to the job site for assembly into the final structure. The engineering design of the system is normally the responsibility of the systems-engineered metal building manufacturer.

Tank. A container for holding gases, liquids or solids.

You. The employer.

[Statutory Authority: RCW 49.17.010, .040, .050, and .060. 16-09-085 (Order 15-08), § 296-155-702, filed 04/19/16, effective, 05/20/16. Statutory Authority: RCW 49.17.010, .040, .050. 02-13-115 (Order 01-36), § 296-155-702, filed 06/19/02, effective 09/01/02].

WAC 296-155-703 Site layout, site-specific erection plan and construction sequence.

(1) Before steel erection work can start the controlling contractor must ensure the steel erector is provided written notifications that:

(a) The concrete in the footings, piers and walls and the mortar in the masonry piers and walls has attained either:

- 75% of the intended minimum compressive design strength; or
- Sufficient strength to support the loads imposed during steel erection.

(b) The basis of these measurements is the appropriate ASTM standard test method of field cured samples.

(c) Any repairs, replacements and modifications to the anchor bolts were done per WAC 296-155-707(2).

(2) The steel erector must receive written notice that the concrete in the footings, piers and walls or the mortar in the masonry piers and walls has attained, on the basis of an appropriate ASTM standard test method of field-cured samples, either 75% of the intended minimum compressive design strength or sufficient strength to support the loads imposed during steel erection.

(3) **Site layout**. The controlling contractor must ensure that the following is provided and maintained:

(a) Adequate access roads into and through the site for the safe delivery and movement of derricks, cranes, trucks, other necessary equipment, and the material to be erected and means and methods for pedestrian and vehicular control.

Exception:	*This requirement does not apply to roads outside the construction site.*

(b) A firm, properly graded, drained area, readily accessible to the work with adequate space for the safe storage of materials and the safe operation of the erector's equipment.

(4) You must preplan all of overhead hoisting operations. All hoisting operations in steel erection to ensure that the requirements of WAC 296-155-704(4) are met.

(5) **Site-specific erection plan**. Where employers elect, due to conditions specific to the site, to develop alternate means and methods that provide employee protection in accordance with WAC 296-155-704 (3)(e), 296-155-709 (1)(d) or (5)(d), a site-specific erection plan must be developed by a qualified person and be available at the worksite. Guidelines for establishing a site-specific erection plan are contained in Appendix A to this part.

(6) You must perform steel erection under the supervision of a competent person who is present at the worksite.

[Statutory Authority: RCW 49.17.010, .040, .050, and .060. 16-09-085 (Order 15-08), § 296-155-703, filed 04/19/16, effective, 05/20/16. Statutory Authority: RCW 49.17.010, .040, .050. 02-13-115 (Order 01-36), § 296-155-703, filed 06/19/02, effective 09/01/02].

WAC 296-155-704 Hoisting and rigging.

(1) All the applicable provisions Part L of this chapter apply to hoisting and rigging.

(2) In addition, subsections (3) through (5) of this section apply regarding the hazards associated with hoisting and rigging.

(3) **General.**

(a) Crane preshift visual inspection.

(i) Cranes being used in steel erection activities must be visually inspected prior to each shift by a competent person. The inspection must include observation for deficiencies during operation and, as a minimum, must include:

- All control mechanisms for maladjustments;
- Control and drive mechanism for excessive wear of components and contamination by lubricants, water or other foreign matter;
- Safety devices, including boom angle indicators, boom stops, boom kick out devices, anti-two block devices, and load moment indicators where required;
- Air, hydraulic, and other pressurized lines for deterioration or leakage, particularly those which flex in normal operation;
- Hooks and latches for deformation, chemical damage, cracks, or wear;
- Wire rope reeving for compliance with hoisting equipment manufacturer's specifications;
- Electrical apparatus for malfunctioning, signs of excessive deterioration, dirt, or moisture accumulation;
- Hydraulic system for proper fluid level;
- Tires for proper inflation and condition;

- Ground conditions around the hoisting equipment for proper support, including ground settling under and around outriggers, ground water accumulation, or similar conditions;
- The hoisting equipment for level position; and
- The hoisting equipment for level position after each move and setup.

(ii) If any deficiency is identified, an immediate determination must be made by the competent person if the deficiency constitutes a hazard.

(iii) If the deficiency constitutes a hazard, you must remove the hoisting equipment from service until the deficiency has been corrected.

(iv) The operator is responsible for those operations under their direct control. Whenever there is any doubt as to safety, the operator must have the authority to stop and refuse to handle loads until safety has been assured.

(b) A qualified person (a rigger who is also a qualified person) must inspect the rigging prior to each shift in accordance with WAC 296-155-556 through 296-155-56220.

(c) You must not use the headache ball, hook or load to transport personnel, except as provided in (d) of this subsection.

(d) Cranes or derricks may be used to hoist employees on a personnel platform when work under this part is being conducted if all the applicable provisions of Part L of this chapter are met.

(e) You must not deactivate or make safety latches on hooks inoperable except:

(i) When a qualified rigger has determined that the hoisting and placing of purlins and single joists can be performed more safely by doing so; or

(ii) When equivalent protection is provided in a site-specific erection plan.

(4) **Working under loads**.

(a) You must preplan routes for suspended loads to ensure that no employee works directly below a suspended load except when:

(i) Engaged in the initial connection of the steel; or

(ii) Necessary for the hooking or unhooking of the load.

(b) Whenever workers are within the fall zone and hooking, unhooking, or guiding a load, or doing the initial connection of a load to a component or structure (WAC 296-155-53400(43)(c), you must meet the following criteria:

(i) You must rig materials being hoisted to prevent unintentional displacement;

(ii) You must use hooks with self-closing safety latches or their equivalent to prevent components from slipping out of the hook; and

(iii) All loads must be rigged by a qualified rigger.

(5) **Multiple lift rigging procedure**.

(a) You must only perform a multiple lift if the following criteria are met:

- A multiple lift rigging assembly is used;
- A multiple lift is only permitted when specifically within the manufacturer's specifications and limitations;
- A maximum of 5 members are hoisted per lift;

Exception:	*Bundles of decking must not be lifted using the multiple lift rigging procedure, even though they meet the definition of structural members in WAC 296-155-702.*

- Only beams and similar structural members are lifted; and
- All employees engaged in the multiple lift have been trained in these procedures in accordance with WAC 296-155-717 (3)(a).

(b) Components of the multiple lift rigging assembly must be specifically designed and assembled with a maximum capacity for total assembly and for each individual attachment point. This capacity, certified by the manufacturer or a qualified rigger, must be based on the manufacturer's specifications with a 5 to one safety factor for all components.

(c) The total load must not exceed:

- The rated capacity of the hoisting equipment specified in the hoisting equipment load charts; and
- The rigging capacity specified in the rigging-rating chart.

(d) You must rig the multiple lift rigging assembly with members:

- Attached at their center of gravity and maintained reasonably level;
- Rigged from top down; and
- Rigged at least 7 feet (2.1 m) apart.

(e) You must set the members on the multiple lift rigging assembly from the bottom up.

(f) You must use controlled load lowering whenever the load is over the connectors.

[Statutory Authority: RCW 49.17.010, .040, .050, and .060. 16-09-085 (Order 15-08), § 296-155-704, filed 04/19/16, effective, 05/20/16. Statutory Authority: RCWs 47.17.010, 49.17.040, 49.17.050, 49.17.440 and 49.17.060. 12-01-086 (Order 08-32), § 296-155-704, filed 12/20/11, effective 02/01/12. Statutory Authority: RCW 49.17.010, .040, .050, and .060. 10-22-105 (Order 10-34), § 296-155-704, filed 11/02/10, effective 01/01/11. Statutory Authority: RCW 49.17.010, .040, .050. 02-13-115 (Order 01-36), § 296-155-704, filed 06/19/02, effective 09/01/02]. Statutory Authority: RCW 49.17.010, .040, .050, and .060. 06-05-027 (Order 05-45), § 296-155-704, filed 02/07/06, effective 04/01/06.

WAC 296-155-706 Structural steel assembly.

(1) You must maintain structural stability at all times during the erection process.

> *Note: Federal Highway Administration (FHWA) regulations incorporate by reference a number of standards, policies, and standard specifications published by the American Association of State Highway and Transportation Officials (AASHTO) and other organizations. (See 23 C.F.R. 625.4). Many of these incorporated provisions may be relevant to maintaining structural stability during the erection process. For instance, as of May 17, 2010, in many cases FHWA requires a registered engineer to prepare and seal working drawings for falsework used in highway bridge construction. (See AASHTO Specifications for Highway Bridges, Div. II, Sec. 3.2.1, 15th edition, 1992, which FHWA incorporates by reference in 23 C.F.R. 625.4). FHWA also encourages compliance with AASHTO Specifications that the FHWA regulations do not currently incorporate by reference. (See http://www.fhwa.dot.gov/bridge/lrfd/index.htm.)*

- Make sure that multistory structures have the following:
  - Permanent floors installed as the erection of structural members progress;
  - No more than 8 stories between the erection floor and the upper-most permanent floor; and
  - No more than 4 floors or 48 feet (14.6 m), whichever is less, of unfinished bolting or welding above the foundation or uppermost permanent secured floor.

> *Exception: The above applies except where the structural integrity is maintained as a result of design.*

(2) **Walking/working surfaces.**

(a) Shear connectors and other similar devices.

(i) Shear connectors, reinforcing bars, deformed anchors or threaded studs must not be attached to the top flanges of beams, joists or beam attachments so they project vertically from or horizontally across the top flange of the member until after the metal decking, or other walking/working surface has been installed. This becomes a tripping hazard. Examples of shear connectors are headed steel studs, steel bars or steel lugs.

(ii) Installation of shear connectors on composite floors. When shear connectors are used in construction of composite floors, roofs and bridge decks, employees must lay out and install the shear connectors after the metal decking has been installed, using the metal decking as a working platform.

(b) Slip resistance of metal decking.

(c) You must provide safe access to the working level. Employees must not slide down ropes, columns, or ladders.

(3) **Plumbing-up.**

(a) When deemed necessary by a competent person, you must install plumbing-up equipment in conjunction with the steel erection process to ensure the stability of the structure.

(b) When used, plumbing-up equipment must be in place and properly installed before the structure is loaded with construction material such as loads of joists, bundles of decking or bundles of bridging.

(c) You must only remove plumbing-up equipment with the approval of a competent person.

(4) **Metal decking.**

(a) Hoisting, landing and placing of metal decking bundles.

(i) You must not use bundle packaging and strapping for hoisting unless specifically designed for that purpose.

(ii) If loose items such as dunnage, flashing, or other materials are placed on the top of metal decking bundles to be hoisted, you must secure such items to the bundles.

(iii) You must land bundles of metal decking on joists in accordance with WAC 296-155-709 (5)(d).

(iv) You must land metal decking bundles on framing members so that enough support is provided to allow the bundles to be unbanded without dislodging the bundles from the supports.

(v) At the end of the shift or when environmental or job site conditions require, you must secure metal decking against displacement.

(b) Roof and floor holes and openings. You must install metal decking at roof and floor holes and openings as follows:

(i) Framed metal deck openings must have structural members turned down to allow continuous deck installation except where not allowed by structural design constraints or constructibility.

(ii) Roof and floor holes and openings must be decked over. Where large size, configuration or other structural design does not allow openings to be decked over (such as elevator shafts, stair wells, etc.) you must protect employees in accordance with chapter 296-155 WAC, Part C-1, Fall protection requirements for construction.

(iii) You must not cut metal decking holes and openings until immediately prior to them being permanently filled with the equipment or structure needed or intended to fulfill its specific use and which meets the strength requirements of (c) of this subsection, or must be immediately covered.

(c) Covering roof and floor openings. Smoke dome or skylight fixtures that have been installed are not considered covers for the purpose of this section unless they meet the strength requirements of chapter 296-155 WAC, Part C-1, Fall protection requirements for construction.

(d) Decking gaps around columns. You must install wire mesh, exterior plywood, or equivalent, around columns where planks or metal decking do not fit tightly. The materials used must be of sufficient strength to provide fall protection for personnel and prevent objects from falling through.

(e) Installation of metal decking.

(i) You must lay metal decking tightly and immediately secure it upon placement to prevent accidental movement or displacement.

(ii) During initial placement, you must place metal decking panels to ensure full support by structural members.

(f) Derrick floors.

(i) You must fully deck and plank a derrick floor and complete the steel member connections to support the intended floor loading.

(ii) Temporary loads placed on a derrick floor must be distributed over the underlying support members so as to prevent local overloading of the deck material.

[Statutory Authority: RCW 49.17.010, .040, .050, and .060. 16-09-085 (Order 15-08), § 296-155-706, filed 04/19/16, effective, 05/20/16. Statutory Authority: RCW 49.17.010, .040, .050, and .060. 13-04-073 (Order 06-08), § 296-155-706, filed 02/04/13, effective 04/01/13. Statutory Authority: RCW 49.17.010, .040, .050, and .060. 10-22-105 (Order 10-34), § 296-155-706, filed 11/02/10, effective 01/01/11. Statutory Authority: RCW 49.17.010, .020, .040, .050, and .060. 07-03-163 (Order 06-30), § 296-155-706, filed 01/24/07, effective 04/01/07. Statutory Authority: RCW 49.17.010, .040, .050. 02-13-115 (Order 01-36), § 296-155-706, filed 06/19/02, effective 09/01/02].

WAC 296-155-707 Column anchorage.

(1) **General requirements for erection stability.**

(a) You must anchor all columns by a minimum of 4 anchor rods (anchor bolts).

(b) Each column anchor rod (anchor bolt) assembly, including the column-to-base plate weld and the column foundation, must be designed to resist a minimum eccentric gravity load of 300 pounds (136.2 kg) located 18inches (.46 m) from the extreme outer face of the column in each direction at the top of the column shaft.

(c) You must set columns on level finished floors, pregrouted leveling plates, leveling nuts, or shim packs which are adequate to transfer the construction loads.

(d) All columns must be evaluated by a competent person to determine whether guying or bracing is needed; if guying or bracing is needed, you must install it.

(2) **Repair, replacement or field modification of anchor rods (anchor bolts).**

(a) You must not repair, replace, or field-modify anchor rods (anchor bolts) without the approval of the project structural engineer of record.

(b) Prior to the erection of a column, the controlling contractor must provide written notification to the steel erector if there has been any repair, replacement or modification of the anchor rods (anchor bolts) of that column.

[Statutory Authority: RCW 49.17.010, .040, .050, and .060. 16-09-085 (Order 15-08), § 296-155-707, filed 04/19/16, effective, 05/20/16. Statutory Authority: RCW 49.17.010, .040, .050. 02-13-115 (Order 01-36), § 296-155-707, filed 06/19/02, effective 09/01/02].

WAC 296-155-708 Beams and columns.

(1) **General.**

(a) During the final placing of solid web structural members, you must not release the load from the hoisting line until the members are secured with at least two bolts per connection. These bolts must be of the same size and strength as shown in the erection drawings, drawn up wrench-tight or the equivalent as specified by the project structural engineer of record.

Exception: See subsection (2) of this section.

(b) A competent person must determine if more than two bolts are necessary to ensure the stability of cantilevered members; if additional bolts are needed, you must install them.

(2) **Diagonal bracing**. You must secure solid web structural members used as diagonal bracing by at least one bolt per connection drawn up wrench-tight or the equivalent as specified by the project structural engineer of record.

(3) (a) **Double connections at columns and/or at beam webs over a column**. When two structural members on opposite sides of a column web, or a beam web over a column, are connected sharing common connection holes, at least one bolt with its wrench-tight nut must remain connected to the first member unless a shop-attached or field-attached seat or equivalent connection device is supplied with the member to secure the first member and prevent the column from being displaced (see Appendix E to this part for examples of equivalent connection devices).

(b) If a seat or equivalent device is used, the seat (or device) must be designed to support the load during the double connection process. It must be adequately bolted or welded to both a supporting member and the first member before the nuts on the shared bolts are removed to make the double connection.

(4) **Column splices**. Each column splice must be designed to resist a minimum eccentric gravity load of 300 pounds (136.2 kg) located 18 inches (.46 m) from the extreme outer face of the column in each direction at the top of the column shaft.

(5) **Perimeter columns**. You must not erect perimeter columns unless:

(a) The perimeter columns extend a minimum of 48 inches (1.2 m) above the finished floor to permit installation of perimeter safety cables prior to erection of the next tier, except where constructibility does not allow (see Appendix D to this part);

(b) The perimeter columns have holes or other devices in or attached to perimeter columns at 42 to 45 inches (107-114 cm) above the finished floor and the midpoint between the finished floor and the top cable to permit installation of perimeter safety cables required by WAC 296-155-716 (1)(b), except where constructibility does not allow. (See Appendix D to this part.)

[Statutory Authority: RCW 49.17.010, .040, .050, and .060. 16-09-085 (Order 15-08), § 296-155-708, filed 04/19/16, effective, 05/20/16. Statutory Authority: RCW 49.17.010, .040, .050. 02-13-115 (Order 01-36), § 296-155-708, filed 06/19/02, effective 09/01/02].

WAC 296-155-709 Open web steel joists.

(1) **General**.

(a) Where steel joists are used and columns are not framed in at least two directions with solid web structural steel members, a steel joist must be field-bolted at the column to provide lateral stability to the column during erection.

> *Exception: See (b) of this subsection. For the installation of this joist:*
>
> *(i) A vertical stabilizer plate must be provided on each column for steel joists. The plate must be a minimum of 6 inch by 6 inch (152 mm by 152 mm) and must extend at least 3 inches (76 mm) below the bottom chord of the joist with a 13/16-inch (21 mm) hole to provide an attachment point for guying or plumbing cables.*
>
> *(ii) The bottom chords of steel joists at columns must be stabilized to prevent rotation during erection.*
>
> *(iii) You must not release hoisting cables until the seat at each end of the steel joist is field-bolted, and each end of the bottom chord is restrained by the column stabilizer plate.*

(b) Where constructibility does not allow a steel joist to be installed at the column:

(i) You must install an alternate means of stabilizing joists on both sides near the column and it must:

- Provide stability equivalent to (a) of this subsection;
- Be designed by a qualified person;
- Be shop installed; and
- Be included in the erection drawings.

(ii) You must not release hoisting cables until the seat at each end of the steel joist is field-bolted and the joist is stabilized.

(c) Where steel joists at or near columns span 60 feet (18.3 m) or less, the joist must be designed with sufficient strength to allow one employee to release the hoisting cable without the need for erection bridging.

(d) Where steel joists at or near columns span more than 60 feet (18.3 m), the joists must be set in tandem with all bridging installed unless an alternative method of erection, which provides equivalent stability to the steel joist, is designed by a qualified person and is included in the site-specific erection plan.

(e) You must not place a steel joist or steel joist girder on any support structure unless such structure is stabilized.

(f) When steel joist(s) are landed on a structure, you must secure them to prevent unintentional displacement prior to installation.

(g) You must not make any modification that affects the strength of a steel joist or steel joist girder without the approval of the project structural engineer of record.

(h) Field-bolted joists.

(i) Except for steel joists that have been preassembled into panels, connections of individual steel joists to steel structures in bays of 40 feet (12.2 m) or more must be fabricated to allow for field bolting during erection.

(ii) These connections must be field-bolted unless constructability does not allow.

(i) You must not use steel joists and steel joist girders as anchorage points for a fall arrest system unless written approval to do so is obtained from a qualified person.

(j) You must establish a bridging terminus point before bridging is installed. (See Appendix E to this part.)

(2) **Attachment of steel joists and steel joist girders.**

(a) You must attach each end of "K" series steel joists to the support structure with a minimum of two 1/8-inch (3 mm) fillet welds one inch (25 mm) long or with two 1/2-inch (13 mm) bolts, or the equivalent.

(b) You must attach each end of "LH" and "DLH" series steel joists and steel joist girders to the support structure with a minimum of two 1/4-inch (6 mm) fillet welds two inches (51 mm) long, or with two 3/4-inch (19 mm) bolts, or the equivalent.

(c) Except as provided in (d) of this subsection, you must attach each steel joist to the support structure, at least at one end on both sides of the seat, immediately upon placement in the final erection position and before additional joists are placed.

(d) You must attach panels that have been preassembled from steel joists with bridging to the structure at each corner before the hoisting cables are released.

(3) **Erection of steel joists.**

(a) You must attach both sides of the seat of one end of each steel joist that requires bridging under Tables A and B to the support structure before hoisting cables are released.

(b) For joists over 6 feet, you must attach both ends of the joist as specified in subsections (2) and (4) of this section before the hoisting cables are released.

(c) On steel joists that do not require erection bridging under Tables A and B, you must only allow one employee on the joist until all bridging is installed and anchored.

Table A-Erection of Bridging for Short Span Joists							
Joist	Span		Joist	Span		Joist	Span
8L1	NM		22K10	40-0		14KCS1	NM
10K1	NM		22K11	40-0		14KCS2	NM
12K1	23-0		24K4	36-0		14KCS3	NM
12K3	NM		24K5	38-0		16KCS2	NM
12K5	NM		24K6	39-0		16KCS3	NM
14K1	27-0		24K7	43-0		16KCS4	NM
14K3	NM		24K8	43-0		16KCS5	NM
14K4	NM		24K9	44-0		18KCS2	35-0
14K6	NM		24K10	NM		18KCS3	NM
16K2	29-0		24K12	NM		18KCS4	NM
16K3	30-0		26K5	38-0		18KCS5	NM
16K4	32-0		26K6	39-0		20KCS2	36-0
16K5	32-0		26K7	43-0		20KCS3	39-0
16K6	NM		26K8	44-0		20KCS4	NM
16K7	NM		26K9	45-0		20KCS5	NM
16K9	NM		26K10	49-0		22KCS2	36-0
18K3	31-0		26K12	NM		22KCS3	40-0
18K4	32-0		28K6	40-0		22KCS4	NM
18K5	33-0		28K7	43-0		22KCS5	NM
18K6	35-0		28K8	44-0		24KCS2	39-0
18K7	NM		28K9	45-0		24KCS3	44-0
18K9	NM		28K10	49-0		24KCS4	NM
18K10	NM		28K12	53-0		24KCS5	NM
20K3	32-0		30K7	44-0		26KCS2	39-0
20K4	34-0		30K8	45-0		26KCS3	44-0
20K5	34-0		30K9	45-0		26KCS4	NM
20K6	36-0		30K10	50-0		26KCS5	NM

Table A-Erection of Bridging for Short Span Joists (Continued)							
20K7	39-0		30K11	52-0		28KCS2	40-0
20K9	39-0		30K12	54-0		28KCS3	45-0
20K10	NM		10KCS1	NM		28KCS4	53-0
22K4	34-0		10KCS2	NM		28KCS5	53-0
22K5	35-0		10KCS3	NM		30KCS3	45-0
22K6	36-0		12KCS1	NM		30KCS4	54-0
22K7	40-0		12KCS2	NM		30KCS5	54-0
22K9	40-0		12KCS3	NM			

NM = Diagonal bolted bridging not mandatory for joists under 40 feet.

Table B-Erection Bridging for Long Span Joists				
Joist	Span		Joist	Span
18LH02	33-0		28LH06	42-0
18LH03	NM		28LH07	NM
18LH04	NM		28LH08	NM
18LH05	NM		28LH09	NM
18LH06	NM		28LH10	NM
18LH07	NM		28LH11	NM
18LH08	NM		28LH12	NM
18LH09	NM		28LH13	NM
20LH02	33-0		32LH06	47-0 through 60-0
20LH03	38-0		32LH07	47-0 through 60-0
20LH04	NM		32LH08	55-0 through 60-0
20LH05	NM		32LH09	NM through 60-0
20LH06	NM		32LH10	NM through 60-0
20LH07	NM		32LH11	NM through 60-0
20LH08	NM		32LH12	NM through 60-0
20LH09	NM		32LH13	NM through 60-0
20LH10	NM		32LH14	NM through 60-0
24LH03	35-0		32LH15	NM through 60-0

Table B-Erection Bridging for Long Span Joists (Continued)				
24LH04	39-0		36LH07	47-0 through 60-0
24LH05	40-0		36LH08	47-0 through 60-0
24LH06	45-0		36LH09	57-0 through 60-0
24LH07	NM		36LH10	NM through 60-0
24LH08	NM		36LH11	NM through 60-0
24LH09	NM		36LH12	NM through 60-0
24LH10	NM		36LH13	NM through 60-0
24LH11	NM		36LH14	NM through 60-0
28LH05	42-0		36LH15	NM through 60-0

NM = Diagonal bolted bridging not mandatory for joists under 40 feet.

(d) You must not allow employees on steel joists where the span of the steel joist is equal to or greater than the span shown in Tables A and B except in accordance with WAC 296-155-709(4).

(e) When permanent bridging terminus points cannot be used during erection, additional temporary bridging terminus points are required to provide stability. (See Appendix E of this part.)

(4) **Erection bridging.**

(a) Where the span of the steel joist is equal to or greater than the span shown in Tables A and B, the following applies:

(i) You must install a row of bolted diagonal erection bridging near the midspan of the steel joist;

(ii) You must not release hoisting cables until this bolted diagonal erection bridging is installed and anchored; and

(iii) You must not allow more than one employee on these spans until all other bridging is installed and anchored.

(b) Where the span of the steel joist is over 60 feet (18.3 m) through 100 feet (30.5 m), the following applies:

(i) All rows of bridging must be bolted diagonal bridging;

(ii) You must install two rows of bolted diagonal erection bridging near the third points of the steel joist;

(iii) You must not release hoisting cables until this bolted diagonal erection bridging is installed and anchored; and

(iv) You must not allow more than two employees on these spans until all other bridging is installed and anchored.

(c) Where the span of the steel joist is over 100 feet (30.5 m) through 144 feet (43.9 m), the following applies:

(i) You must bolt all rows of bridging;

(ii) You must not release hoisting cables until all bridging is installed and anchored; and

(iii) You must not allow more than two employees on these spans until all bridging is installed and anchored.

(d) For steel members spanning over 144 feet (43.9 m), the erection methods used must be in accordance with WAC 296-155-708.

(e) Where any steel joist specified in subsections (3)(b), (4)(a), (b), and (c) of this section is a bottom chord bearing joist, you must provide a row of bolted diagonal bridging near the support(s). You must install and anchor this bridging and anchored before the hoisting cable(s) is released.

(f) When bolted diagonal erection bridging is required by this section, the following applies:

(i) The bridging must be indicated on the erection drawing;

(ii) The erection drawing must be the exclusive indicator of the proper placement of this bridging;

(iii) You must use shop-installed bridging clips, or functional equivalents, where the bridging bolts to the steel joists;

(iv) When two pieces of bridging are attached to the steel joist by a common bolt, you must not remove the nut that secures the first piece of bridging from the bolt for the attachment of the second; and

(v) Bridging attachments must not protrude above the top chord of the steel joist.

(5) **Landing and placing loads.**

(a) During the construction period, the employer placing a load on steel joists must ensure that the load is distributed so as not to exceed the carrying capacity of any steel joist.

(b) Except for (d) of this subsection, no construction loads are allowed on the steel joists until all bridging is installed and anchored and all joist-bearing ends are attached.

(c) The weight of a bundle of joist bridging must not exceed a total of 1,000 pounds(454 kg). You must place a bundle of joist bridging on a minimum of 3 steel joists that are secured at one end. The edge of the bridging bundle must be positioned within one foot (.30 m) of the secured end.

(d) No bundle of decking may be placed on steel joists until all bridging has been installed and anchored and all joist bearing ends attached, unless all of the following conditions are met:

(i) The employer has first determined from a qualified person and documented in a site-specific erection plan that the structure or portion of the structure is capable of supporting the load;

(ii) The bundle of decking is placed on a minimum of 3 steel joists;

(iii) The joists supporting the bundle of decking are attached at both ends;

(iv) At least one row of bridging is installed and anchored;

(v) The total weight of the bundle of decking does not exceed 4,000 pounds (1816 kg); and

(vi) Placement of the bundle of decking must be in accordance with (e) of this subsection.

(e) The edge of the construction load must be placed within one foot (.30 m) of the bearing surface of the joist end.

[Statutory Authority: RCW 49.17.010, .040, .050, and .060. 16-09-085 (Order 15-08), § 296-155-709, filed 04/19/16, effective, 05/20/16. Statutory Authority: RCW 49.17.010, .040, .050. 02-13-115 (Order 01-36), § 296-155-709, filed 06/19/02, effective 09/01/02].

WAC 296-155-711 Systems-engineered metal buildings.

(1) All of the requirements of this part apply to the erection of systems-engineered metal buildings except WAC 296-155-707 (column anchorage) and WAC 296-155-709 (open web steel joists).

(2) Each structural column must be anchored by a minimum of 4 anchor rods (anchor bolts).

(3) Rigid frames must have 50% of their bolts or the number of bolts specified by the manufacturer (whichever is greater) installed and tightened on both sides of the web adjacent to each flange before the hoisting equipment is released.

(4) You must not place construction loads on any structural steel framework unless such framework is safely bolted, welded or otherwise adequately secured.

(5) In girt and eave strut-to-frame connections, when girts or eave struts share common connection holes, at least one bolt with its wrench-tight nut must remain connected to the first member unless a manufacturer-supplied, field-attached seat or similar connection device is present to secure the first member so that the girt or eave strut is always secured against displacement.

(6) Both ends of all steel joists or cold-formed joists must be fully bolted and/or welded to the support structure before:

(a) Releasing the hoisting cables;

(b) Allowing an employee on the joists; or

(c) Allowing any construction loads on the joists.

(7) You must not use purlins and girts as an anchorage point for a fall arrest system unless written approval is obtained from a qualified person.

(8) Purlins may only be used as a walking/working surface when installing safety systems, after all permanent bridging has been installed and fall protection is provided.

(9) Construction loads may be placed only within a zone that is within 8 feet (2.5 m) of the center line of the primary support member.

[Statutory Authority: RCW 49.17.010, .040, .050, and .060. 16-09-085 (Order 15-08), § 296-155-711, filed 04/19/16, effective, 05/20/16. Statutory Authority: RCW 49.17.010, .040, .050. 02-13-115 (Order 01-36), § 296-155-711, filed 06/19/02, effective 09/01/02].

WAC 296-155-714 Falling object protection.

(1) **Securing loose items aloft**. You must secure all materials, equipment, and tools, which are not in use while aloft, against accidental displacement.

(2) **Protection from falling objects other than materials being hoisted**. The controlling contractor must bar other construction processes below steel erection unless overhead protection for the employees below is provided.

[Statutory Authority: RCW 49.17.010, .040, .050, and .060. 16-09-085 (Order 15-08), § 296-155-714, filed 04/19/16, effective, 05/20/16. Statutory Authority: RCW 49.17.010, .040, .050. 02-13-115 (Order 01-36), § 296-155-714, filed 06/19/02, effective 09/01/02].

WAC 296-155-716 Fall protection.

(1) **General requirements.**

(a) Fall protection will be in accordance with chapter 296-155 WAC, Part C-1, Fall protection requirements for construction.

(b) During steel erection activities, fall protection must be as required by chapter 296-155 WAC, Part C-1, Fall protection requirements for construction. Additionally, on multistory structures, you must install perimeter safety cables at the final interior and exterior perimeters of the floors as soon as metal decking has been installed. See Appendix D.

(2) **Connectors**. Each connector must: Have completed connector training in accordance with WAC 296-155-717.

(3) **Custody of fall protection**. Fall protection provided by the steel erector must remain in the area where steel erection activity has been completed, to be used by other trades, only if the controlling contractor or its authorized representative:

(a) Has directed the steel erector to leave the fall protection in place; and

(b) Has inspected and accepted control and responsibility of the fall protection prior to authorizing persons other than steel erectors to work in the area.

[Statutory Authority: RCW 49.17.010, .040, .050, and .060. 16-09-085 (Order 15-08), § 296-155-716, filed 04/19/16, effective, 05/20/16. Statutory Authority: RCW 49.17.010, .040, .050, and .060. 13-04-073 (Order 06-08), § 296-155-716, filed 02/04/13, effective 04/01/13. Statutory Authority: RCW 49.17.010, .040, .050. 02-13-115 (Order 01-36), § 296-155-716, filed 06/19/02, effective 09/01/02].

WAC 296-155-717 Training.

(1) **Training personnel**. Training required by this section must be provided by a qualified person(s).

(2) **Fall hazard training**. You must train each employee exposed to a fall hazard in accordance with the requirements of this chapter. You must institute a training program as required by chapter 296-155 WAC, Part C-1, and ensure employee participation in the program.

(3) **Special training programs**. In addition to the training required in subsection (2) of this section, you must provide special training to employees engaged in the following activities:

(a) Multiple lift rigging procedure. You must ensure that each employee who performs multiple lift rigging has been provided training in the following areas:

(i) The nature of the hazards associated with multiple lifts; and

(ii) The proper procedures and equipment to perform multiple lifts required by WAC 296-155-704(5).

(b) Connector procedures. You must ensure that each connector has been provided training in the following areas:

(i) The nature of the hazards associated with connecting (see Appendix D for nonmandatory training guidelines); and

(ii) The establishment, access, proper connecting techniques, double connections, and work practices, required by WAC 296-155-708(3) and Part C-1, chapter 296-155 WAC.

[Statutory Authority: RCW 49.17.010, .040, .050, and .060. 16-09-085 (Order 15-08), § 296-155-717, filed 04/19/16, effective, 05/20/16. Statutory Authority: RCW 49.17.010, .040, .050, and .060. 09-15-145 (Order 09-04), § 296-155-717, filed 07/21/09, effective 09/01/09. Statutory Authority: RCW 49.17.010, .040, .050. 02-13-115 (Order 01-36), § 296-155-717, filed 06/19/02, effective 09/01/02].

WAC 296-155-72401 Appendix A-Guidelines for establishing the components of a site-specific erection plan: Nonmandatory guidelines for complying with WAC 296-155-703(5).

(1) **General**. This appendix serves as a guideline to assist employers who elect to develop **a** site-specific erection plan in accordance with WAC 296-155-703(5) with alternate means and methods to provide employee protection in accordance with WAC 296-155-704 (3)(e) and 296-155-709 (5)(d).

(2) **Development of a site-specific erection plan**. Pre-construction conference(s) and site inspection(s) are held between the erector and the controlling contractor, and others such as the project engineer and fabricator before the start of steel erection. The purpose of such conference(s) is to develop and review the site-specific erection plan that will meet the requirements of this section.

(3) **Components of a site-specific erection plan**. In developing a site-specific erection plan, a steel erector considers the following elements:

(a) The sequence of erection activity, developed in coordination with the controlling contractor, that includes the following:

(i) Material deliveries;

(ii) Material staging and storage; and

(iii) Coordination with other trades and construction activities.

(b) A description of the crane and derrick selection and placement procedures, including the following:

(i) Site preparation;

(ii) Path for overhead loads; and

(iii) Critical lifts, including rigging supplies and equipment.

(c) A description of steel erection activities and procedures, including the following:

(i) Stability considerations requiring temporary bracing and guying;

(ii) Erection bridging terminus point;

(iii) Anchor rod (anchor bolt) notifications regarding repair, replacement and modifications;

(iv) Columns and beams (including joists and purlins);

(v) Connections;

(vi) Decking; and

(vii) Ornamental and miscellaneous iron.

(d) A description of the fall protection procedures that will be used to comply with Part C-1, chapter 296-155 WAC.

(e) A description of the procedures that will be used to comply with WAC 296-155-714.

(f) A description of the special procedures required for hazardous nonroutine tasks.

(g) A certification for each employee who has received training for performing steel erection operations as required by WAC 296-155-717.

(h) A list of the qualified and competent persons.

(i) A description of the procedures that will be utilized in the event of rescue or emergency response.

(4) **Other plan information**. The plan:

(a) Includes the identification of the site and project; and

(b) Is signed and dated by the qualified person(s) responsible for its preparation and modification.

[Statutory Authority: RCW 49.17.010, .040, .050. 02-13-115 (Order 01-36), § 296-155-72401, filed 06/19/02, effective 09/01/02].

WAC 296-155-72402 Appendix B: Acceptable test methods for testing slip-resistance of walking/working surfaces.

Nonmandatory guidelines for complying with WAC 296-155-706 (2)(c). The following references provide acceptable test methods for complying with the requirements of WAC 296-155-706 (2)(c). *Standard test method for using a portable inclineable articulated strut slip tester (PIAST)(ASTM F1677-96) *standard test method for using a variable incidence tribometer (VIT)(ASTM F1679-96).

[Statutory Authority: RCW 49.17.010, .040, .050. 02-13-115 (Order 01-36), § 296-155-72402, filed 06/19/02, effective 09/01/02].

WAC 296-155-72403 Appendix C--Training: Nonmandatory guidelines for complying with WAC 296-155-717.

The training requirements of WAC 296-155-717 will be deemed to have been met if employees have completed a training course on steel erection, including instruction in the provisions of this WAC that has been approved by the U.S. Department of Labor Apprenticeship Training Employer Labor Services or an approved state apprenticeship council. A training program may include the following:

- Multiple lift rigging procedures;
- Structural steel assembly;
- Open web steel joists;
- Panelized joist election;
- Preengineered metal buildings;
- Installation of steel decking; and
- Site conditions and construction sequence.

[Statutory Authority: RCW 49.17.010, .040, .050. 02-13-115 (Order 01-36), § 296-155-72403, filed 06/19/02, effective 09/01/02].

WAC 296-155-72404 Appendix D-Perimeter columns:

Nonmandatory guidelines for complying with WAC 296-155-708(5).

To protect the unprotected side or edge of a walking/working surface in multistory structures, when holes in the column web are used for perimeter safety cables, the column splice must be placed sufficiently high so as not to interfere with any attachments to the column necessary for the column splice. Column splices are recommended to be placed at every other or fourth levels as design allows. Column splices at third levels are detrimental to the erection process and should be avoided if possible.

[Statutory Authority: RCW 49.17.010, .040, .050. 02-13-115 (Order 01-36), § 296-155-72404, filed 06/19/02, effective 09/01/02].

WAC 296-155-72405 Appendix E--Double connections:

Illustrations of a clipped end connection and a staggered connection: Nonmandatory guidelines for complying with WAC 296-155-708 (3)(a).

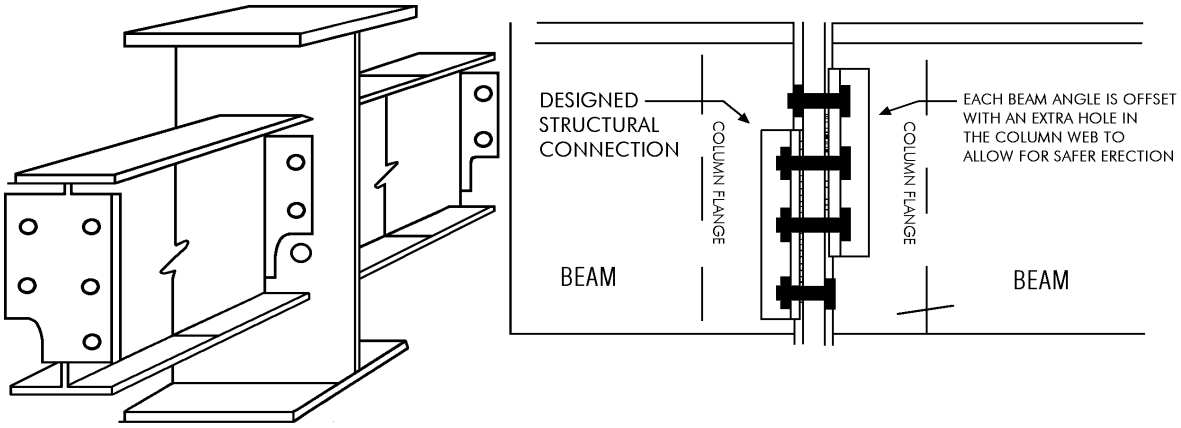

[Statutory Authority: RCW 49.17.010, .040, .050. 02-13-115 (Order 01-36), § 296-155-72405, filed 06/19/02, effective 09/01/02].

WAC 296-155-72406 Appendix F-Typical installations for bridging:

Nonmandatory guidelines for complying with chapter 296-155 WAC. Employers must comply with fall restraint and fall arrest as stated in Part C-1, chapter 296-155 WAC.

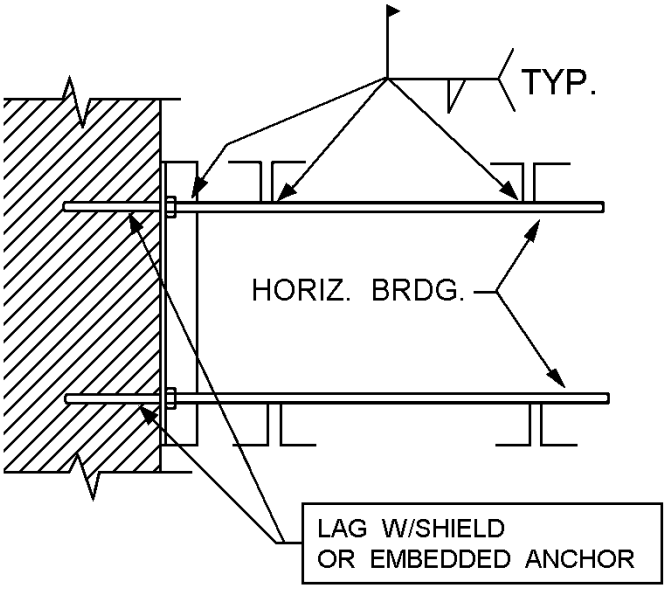

Illustration 1 – **HORIZONTAL BRIDGING – TERMINUS AT WALL**

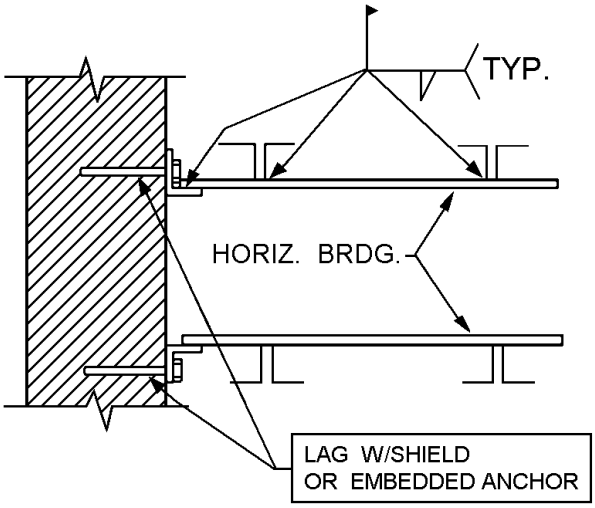

Illustration 2 – **HORIZONTAL BRIDGING – TERMINUS AT WALL**

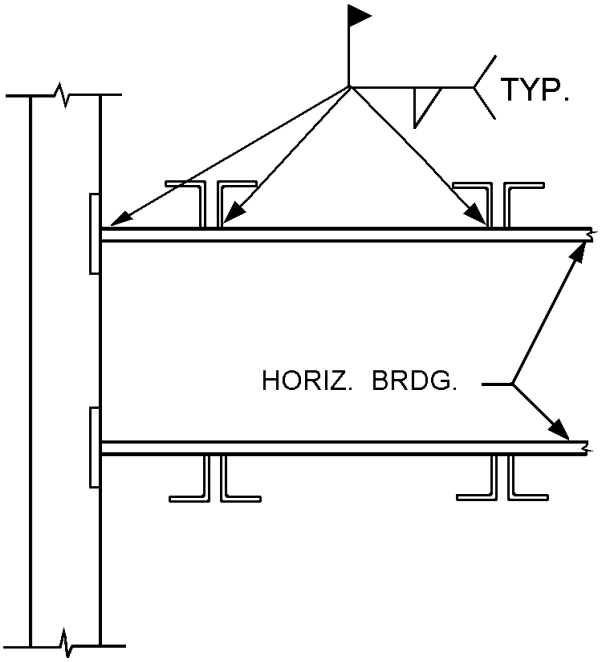

Illustration 3 – **HORIZONTAL BRIDGING – TERMINUS AT PANEL WALL**

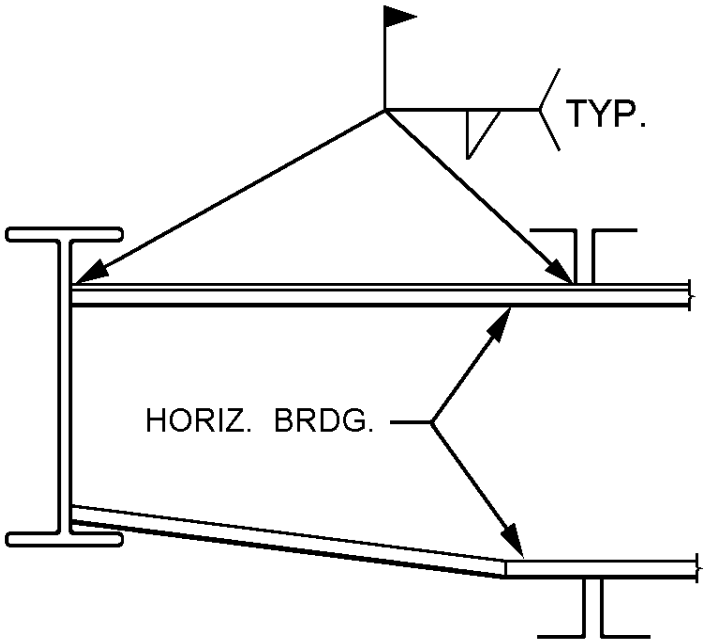

Illustration 4 – **HORIZONTAL BRIDGING – TERMINUS AT STRUCTURAL SHAPE**

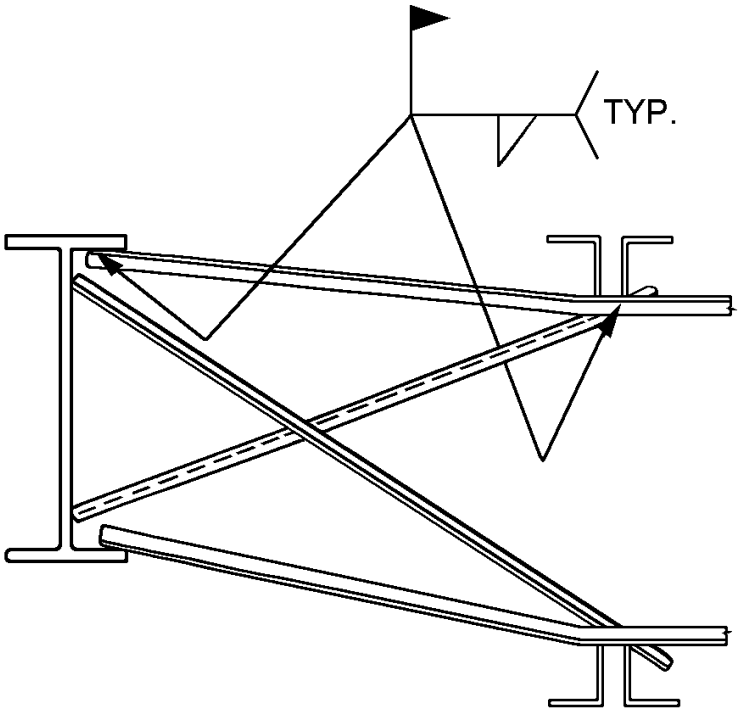

Illustration –5 **HORIZONTAL BRIDGING – TERMINUS AT STRUCTURAL SHAPE WITH OPTIONAL "X-BRIDGING**

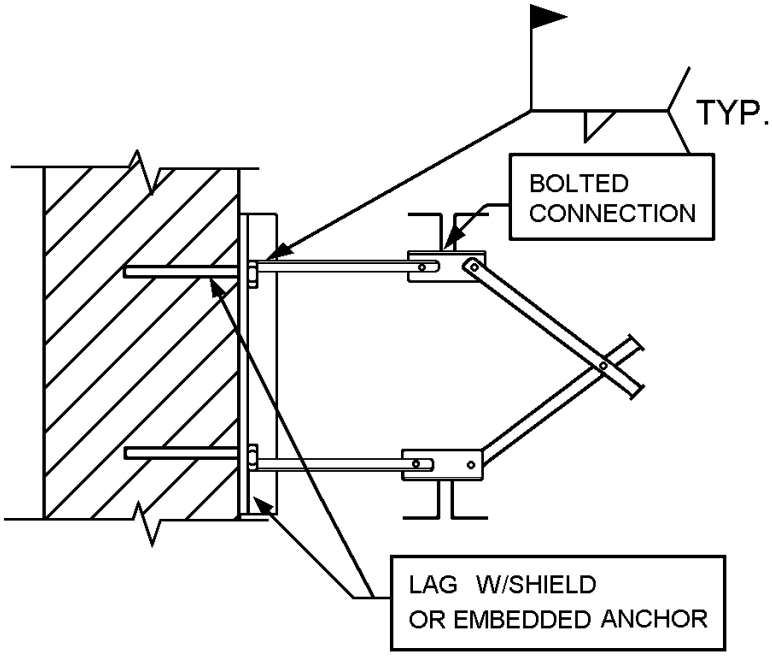

Illustration 6 – **BOLTED DIAGIONAL BRIDGING – TERMINUS AT WALL**

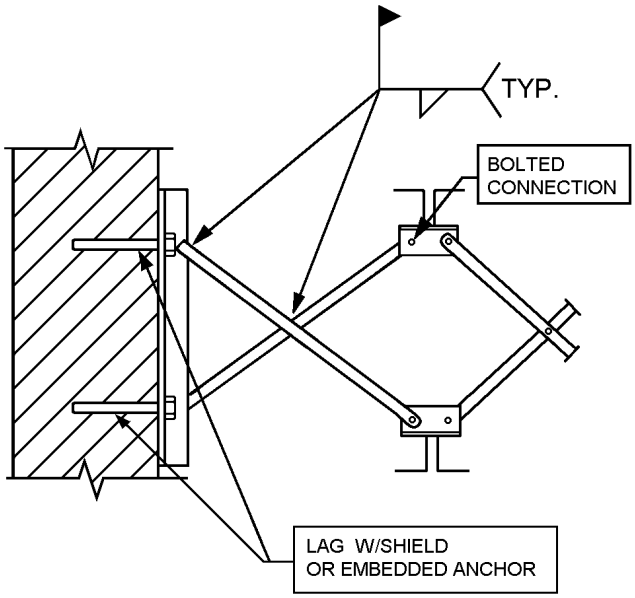

Illustration 7 – **BOLTED DIAGIONAL BRIDGING – TERMINUS AT WALL**

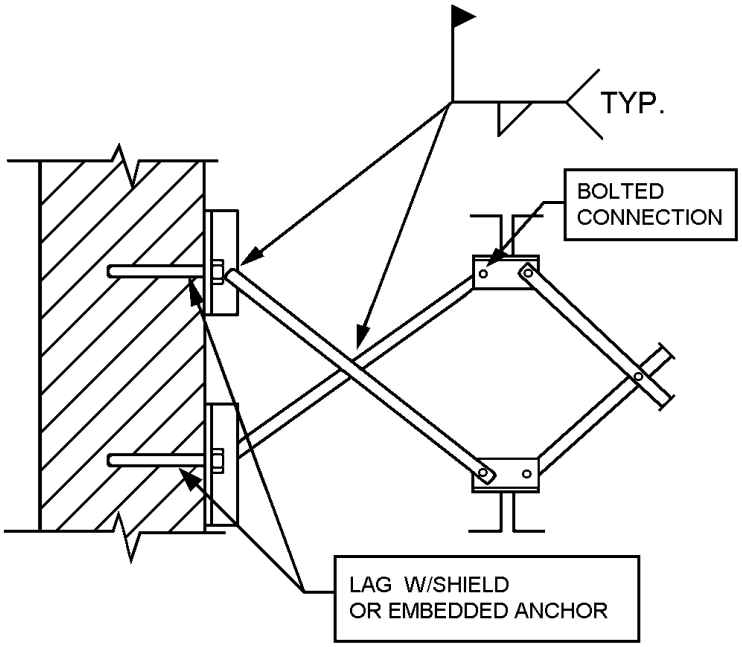

Illustration 8 – **BOLTED DIAGIONAL BRIDGING – TERMINUS AT WALL**

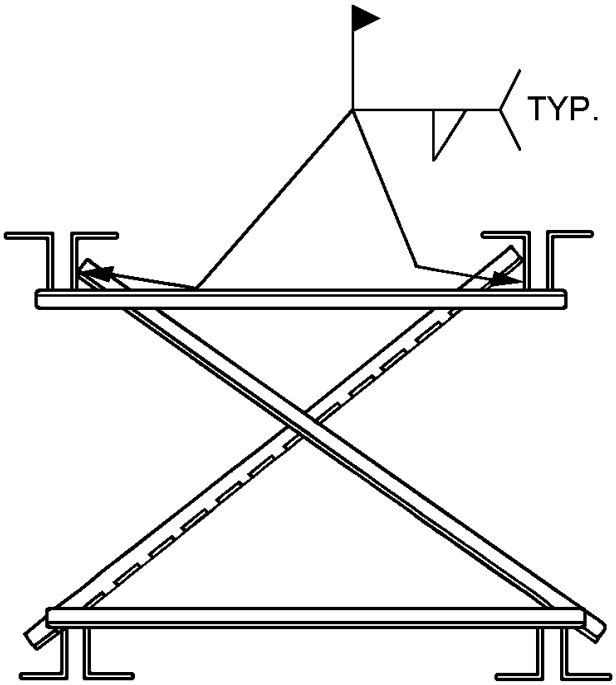

Illustration 9 – **JOINT PAIR BRIDGING – TERMINUS POINT**

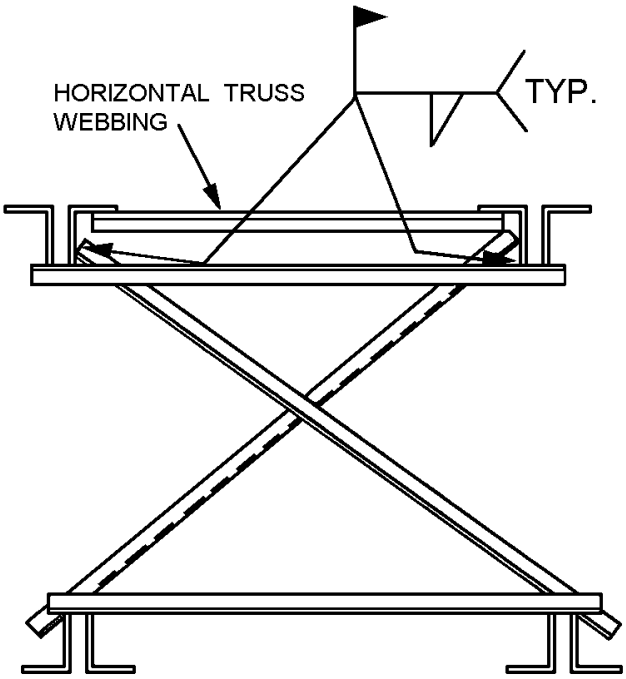

Illustration 10 – **JOISTS PAIR BRIDGING – TERMINUS POINT WITH HORIZONTAL TRUSS**

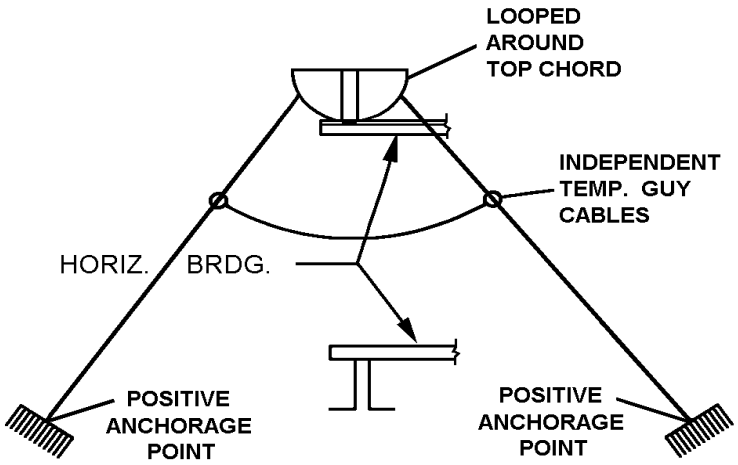

Illustration 11 – **HORIZONTAL BRIDGING - TERMINUS POINT SECURED BY TEMP. GUY CABLES**

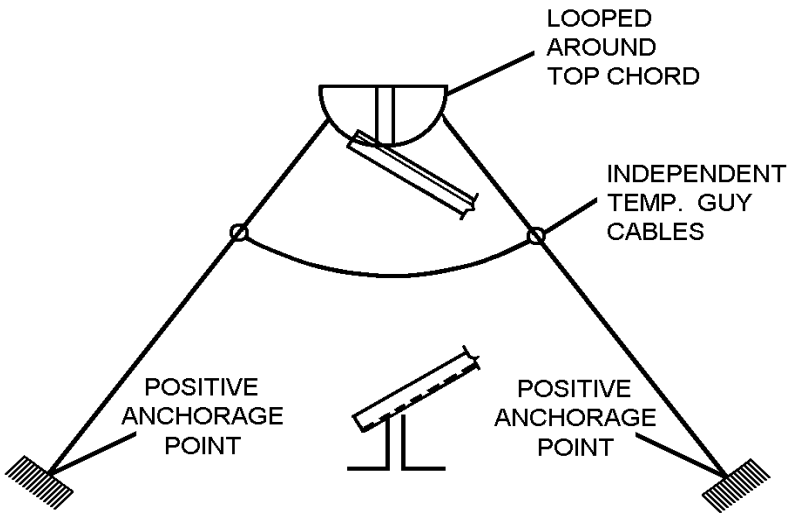

Illustration 12 – **DIAGIONAL BRIDGING – TERMINUS POINT SECURED BY TEMP. GUY CABLES**
Employers must comply with fall restraint and fall arrest as stated in Part C-1, chapter 296-155 WAC.

[Statutory Authority: RCW 49.17.010, .040, .050. 02-13-115 (Order 01-36), § 296-155-72406, filed 06/19/02, effective 09/01/02].

PART Q
UNDERGROUND CONSTRUCTION

LAST UPDATED: 05/20/2016

WAC 296-155-725 Definitions applicable to this part..... 1

WAC 296-155-730 Tunnels and shafts..... 2

WAC 296-155-735 Caissons. 23

WAC 296-155-740 Cofferdams. 23

WAC 296-155-745 Compressed air. 24

WAC 296-155-74501 Appendix A-Decompression tables. 34

WAC 296-155-725 Definitions applicable to this part.

Acceptable. Any device, equipment, or appliance that is either approved by MSHA and maintained in permissible condition, or is listed or labeled for the class and location under Part I of this chapter.

Bulkhead. An airtight structure separating the working chamber from free air or from another chamber under a lesser pressure than the working pressure.

Caisson. A wood, steel, concrete or reinforced concrete, air- and water-tight chamber in which it is possible for persons to work under air pressure greater than atmospheric pressure to excavate material below water level.

Cofferdam. A watertight barricade or enclosure erected, sunk, driven or otherwise fabricated to permit the performance of work where hydrostatic pressure exists.

Decanting. A method used for decompressing under emergency circumstances. In this procedure, the employees are brought to atmospheric pressure with a very high gas tension in the tissues and then immediately recompressed in a second and separate chamber or lock.

Emergency locks A lock designed to hold and permit the quick passage of an entire shift of employees.

High air. Air pressure used to supply power to pneumatic tools and devices.

Low air. Air supplied to pressurize working chambers and locks.

Man lock. A chamber through which persons pass from one air pressure environment into another.

Materials lock. A chamber through which materials and equipment pass from one air pressure environment into another.

Medical lock. A special chamber in which employees are treated for decompression illness. It may also be used in pre-employment physical examinations to determine the adaptability of the prospective employee to changes in pressure.

Rapid excavation machine. Tunnel boring machines, shields, roadheaders, or any other similar excavation machine.

Normal condition. One during which exposure to compressed air is limited to a single continuous working period followed by a single decompression in any given 24-hour period; the total time of exposure to compressed air during the single continuous working period is not interrupted by exposure to normal atmospheric pressure, and a second exposure to compressed air does not occur until at least 12 consecutive hours of exposure to normal atmospheric pressure has elapsed since the employee has been under pressure.

Pressure. A force acting on a unit area. Usually shown as pounds per square inch. (p.s.i.)

Absolute pressure. (p.s.i.a.) The sum of the atmospheric pressure and gauge pressure (p.s.i.g.)

Atmospheric pressure. The pressure of air at sea level, usually 14.7 p.s.i.a. (1 atmosphere), or 0 p.s.i.g.

Gauge pressure. (p.s.i.g.) Pressure measured by a gauge and indicating the pressure exceeding atmospheric.

Safety screen. An air- and water-tight diaphragm placed across the upper part of a compressed air tunnel between the face and bulkhead, in order to prevent flooding the crown of the tunnel between the safety screen and the bulkhead, thus providing a safe means of refuge and exit from a flooding or flooded tunnel.

Special decompression chamber. A chamber to provide greater comfort for employees when the total decompression time exceeds 75 minutes.

Working chamber. The space or compartment under air pressure in which the work is being done.

C.F.R. Code of Federal Regulations.

MSHA. Mine Safety and Health Administration.

NIOSH. National Institute for Occupational Safety and Health.

[Statutory Authority: RCW 49.17.010, .040, .050, and .060. 16-09-085 (Order 15-08), § 296-155-725, filed 04/19/16, effective, 05/20/16. Statutory Authority: Chapter 49.17 RCW. 90-03-029 (Order 89-20), § 296-155-725, filed 1/11/90, effective 2/26/90. Statutory Authority: RCW 49.17.040 and 49.17.050. 86-03-074 (Order 86-14), § 296-155-725, filed 1/21/86; Order 74-26, § 296-155-725, filed 5/7/74, effective 6/6/74.]

WAC 296-155-730 Tunnels and shafts.

(1) **Scope and application**.

(a) This section applies to the construction of underground tunnels, shafts, chambers, and passageways. This section also applies to cut-and-cover excavations which are both physically connected to ongoing underground construction operations within the scope of this section, and covered in such a manner as to create conditions characteristic of underground construction.

(b) This section does not apply to excavation and trenching operations covered by Part N of this chapter, such as foundation operations for above-ground structures that are not physically connected to underground construction operations, and surface excavation.

(c) You must comply with the requirements of this part and chapter in addition to applicable requirements of chapter 296-36 WAC, Safety standards-Compressed air work.

(2) **Access and egress.**

(a) Each operation must have a check-in/check-out system that will provide positive identification of every employee underground. You must keep an accurate record of identification and location of the employees on the surface. This procedure is not required when the construction of underground facilities designed for human occupancy has been sufficiently completed so that the permanent environmental controls are effective, and when the remaining construction activity will not cause any environmental hazard, or structural failure within the facilities.

(b) You must provide and maintain safe means of access and egress to all work stations.

(c) You must provide access and egress in such a manner that employees are protected from being struck by excavators, haulage machines, trains, and other mobile equipment.

(d) You must control access to all openings to prevent unauthorized entry underground. Unused chutes, manways, or other openings must be tightly covered, bulkheaded, or fenced off, and must be posted with warning signs indicating “keep out” or similar language. Completed or unused sections of the underground facility must be barricaded.

(3) **Safety instruction**. You must instruct all employees in the recognition and avoidance of hazards associated with underground construction activities including, where appropriate, the following subjects:

(a) Air monitoring;

(b) Ventilation;

(c) Confined space entry procedures;

(d) Permit-required confined space entry procedures;

(e) Illumination;

(f) Communications;

(g) Flood control;

(h) Mechanical equipment;

(i) Personal protective equipment;

(j) Explosives;

(k) Fire prevention and protection; and

(l) Emergency procedures, including evacuation plans and check-in/check-out systems.

(4) **Notification.**

(a) You must inform oncoming shifts of any hazardous occurrences or conditions that have affected, or might affect employee safety, including liberation of gas, equipment failures, earth or rock slides, cave-ins, flooding’s, fire(s), or explosions.

(b) You must record information specified in (a) of this subsection in a shift journal which must be current prior to the end of each shift, and must be located aboveground.

(c) Oncoming supervisory personnel must read the notification prior to going underground, and must signify their understanding of the contents by affixing their respective initials to the log.

(d) You must retain the hazard notification log on the site until the completion of the project.

(e) You must establish and maintain direct communications for coordination of activities with other employers whose operations at the job site affect or may affect the safety of employees underground.

(5) **Communications.**

(a) When natural unassisted voice communication is ineffective, you must use a power-assisted means of voice communication to provide communication between the work face, the bottom of the shaft, and the surface.

(b) You must provide two effective means of communication, at least one of which must be voice communication, in all shafts which are being developed or used either for personnel access or for hoisting. Additional requirements for hoist operator communication are contained in subsection (22)(c)(xv) of this section.

(c) Powered communication systems must operate on an independent power supply, and must be installed so that the use of or disruption of any one phone or signal location will not disrupt the operation of the system from any other location.

(d) You must test communication systems upon initial entry of each shift to the underground, and as often as necessary at later times, to ensure that they are in working order.

(e) You must provide any employee working alone underground in a hazardous location, who is both out of the range of natural unassisted voice communication and not under observation by other persons, with an effective means of obtaining assistance in an emergency.

(6) **Emergency provisions**. Hoisting capability. When a shaft is used as a means of egress, you must make advance arrangements for power-assisted hoisting capability to be readily available in an emergency, unless the regular hoisting means can continue to function in the event of an electrical power failure at the job site. Such hoisting means must be designed so that the load hoist drum is powered in both directions of rotation and so that the brake is automatically applied upon power release or failure.

(7) **Self-rescuers**. You must provide self-rescuers certified by the National Institute for Occupational Safety and Health under 42 CFR part 84. The respirators must be immediately available to all employees at work stations in underground areas where employees might be trapped by smoke or gas. The selection, issuance, use, and care of respirators must be in accordance with the requirements of chapter 296-842 WAC.

(8) **Designated person**. At least one designated person must be on duty aboveground whenever any employee is working underground. This designated person must be responsible for securing immediate aid and keeping an accurate record of the number, identification, and location of employees who are underground in case of emergency. The designated person must not be so busy with other responsibilities that the personnel counting and identification function is encumbered.

(9) **Emergency lighting**. Each employee underground must have an acceptable portable hand lamp or cap lamp in his or her work area for emergency use, unless natural light or an emergency lighting system provides adequate illumination for escape.

(10) **Rescue teams.**

(a) On job sites where 25 or more employees work underground at one time, you must provide (or make arrangements in advance with locally available rescue services to provide) at least two 5-person rescue teams, one on the job site or within 1/2 hour travel time from the entry point, and the other within 2 hours travel time.

(b) On job sites where less than 25 employees work underground at one time, you must provide (or make arrangements in advance with locally available rescue services to provide) at least one 5-person rescue team to be either on the job site or within 1/2-hour travel time from the entry point.

(c) Rescue team members must be qualified in rescue procedures, the use and limitations of breathing apparatus, and the use of firefighting equipment. You must review qualifications not less than annually.

(d) On job sites where flammable or noxious gases are encountered or anticipated in hazardous quantities, rescue team members must practice donning and using pressure demand mode, self-contained breathing apparatuses monthly.

(e) You must ensure that rescue teams are familiar with conditions at the job site.

(11) **Hazardous classifications.**

(a) Potentially gassy operations. Underground construction operations must be classified as potentially gassy if either:

(i) Air monitoring discloses 10% or more of the lower explosive limit for methane or other flammable gases measured at 12 inches (304.8 mm) +/-0.25 inch (6.35 mm) from the roof, face, floor, or walls in any underground work area for more than a 24-hour period; or

(ii) The history of the geographical area or geological formation indicates that 10% or more of the lower explosive limit for methane or other flammable gases is likely to be encountered in such underground operations.

(b) Gassy operations. Underground construction operations must be classified as gassy if:

(i) Air monitoring discloses 10% or more of the lower explosive limit for methane or other flammable gases measured at 12 inches (304.8 mm) +/-0.25 inch (6.35 mm) from the roof, face, floor, or walls in any underground work area for 3 consecutive days; or

(ii) There has been an ignition of methane or of other flammable gases emanating from the strata that indicates the presence of such gases; or

(iii) The underground construction operation is both connected to an underground work area which is currently classified as gassy and is also subject to a continuous course of air containing the flammable gas concentration.

(c) Declassification to potentially gassy operations. Underground construction gassy operations may be declassified to potentially gassy when air monitoring results remain under 10% of the lower explosive limit for methane or other flammable gases for 3 consecutive days.

(12) **Gassy operations-Additional requirements**. You must only use acceptable equipment, maintained in suitable condition, in gassy operations.

(a) Mobile diesel-powered equipment used in gassy operations must be either approved in accordance with the requirements of 30 CFR Part 36 (formerly Schedule 31) by MSHA, or you must demonstrate it to be fully equivalent to such MSHA-approved equipment, and it must be operated in accordance with that part.

(b) You must prominently post each entrance to a gassy operation with signs notifying all entrants of the gassy classification.

(c) Smoking must be prohibited in all gassy operations and you must be responsible for collecting all personal sources of ignition, such as matches and lighters, from all persons entering a gassy operation.

(d) You must maintain a fire watch as described in chapter 296-155 WAC, Part H, when hot work is performed.

(e) Once an operation has met the criteria in subsection (11)(a)(i) of this section, warranting classification as gassy, you must discontinue all operations in the affected area, except the following, until the operation either is in compliance with all of the gassy operation requirements or has been declassified in accordance with (c) of this subsection:

(i) Operations related to the control of the gas concentration;

(ii) Installation of new equipment, or conversion of existing equipment, to comply with this subsection; and

(iii) Installation of above-ground controls for reversing the air flow.

(13) **Air quality and monitoring.**

(a) General. Air quality limits and control requirements specified in chapter 296-841 WAC must apply except as modified by this subsection.

(b) You must assign a competent person who must perform all air monitoring required by this section.

(c) Where this section requires monitoring of airborne contaminants "as often as necessary," the competent person must make a reasonable determination as to which substances to monitor and how frequently to monitor, considering at least the following factors:

(i) Location of job site: Proximity to fuel tanks, sewers, gas lines, old landfills, coal deposits, and swamps;

(ii) Geology: Geological studies of the job site, particularly involving the soil type and its permeability;

(iii) History: Presence of air contaminants in nearby job sites, changes in levels of substances monitored on the prior shift; and

(iv) Work practices and job site conditions: The use of diesel engines, use of explosives, use of fuel gas, volume and flow of ventilation, visible atmospheric conditions, decompression of the atmosphere, welding, cutting and hot work, and employees' physical reactions to working underground.

(d) You must provide testing and monitoring instruments which are capable of achieving compliance with the provisions of this subsection, and:

(i) Must maintain the testing and monitoring instruments in good condition;

(ii) Must calibrate the instruments on a frequency not to exceed 6 months.

(e) Exposure to airborne contaminants must not exceed the levels established by chapter 296-841 WAC.

(f) You must not substitute respirators for environmental control measures. However, where environmental controls have not yet been developed, or when necessary by the nature of the work involved (for example, welding, sand blasting, lead burning), an employee may work for short periods of time in concentrations of airborne contaminants which exceed the limit of permissible exposure referred to in (d) of this subsection, if the employee wears a respiratory protective device certified by MSHA-NIOSH for protection against the particular hazards involved, and the selection and use of respirators complies with the provisions of chapter 296-842 WAC.

(g) You must withdraw employees from areas in which there is a concentration of an airborne contaminant which exceeds the permissible exposure limit listed for that contaminant, except as modified in (t)(i) and (ii) of this subsection.

(h) You must test the atmosphere in all underground work areas as often as necessary to assure that the atmosphere at normal atmospheric pressure contains at least 19.5% oxygen and no more than 22% oxygen.

(i) You must perform tests for oxygen content before tests for air contaminants.

(j) You must use field-type oxygen analyzers, or other suitable devices, to test for oxygen deficiency.

(k) You must test the atmosphere in all underground work areas quantitatively for carbon monoxide, nitrogen dioxide, hydrogen sulfide, and other toxic gases, dust, vapors, mists, and fumes as often as necessary to ensure that the permissible exposure limits prescribed in chapter 296-62 WAC, Part H, are not exceeded.

(l) You must test the atmosphere in all underground work areas quantitatively for methane and other flammable gases as often as necessary to determine:

(i) Whether action is to be taken under (q), (r), and (s) of this subsection; and

(ii) Whether an operation is to be classified potentially gassy or gassy under subsection (11) of this section.

(m) If diesel-engine or gasoline-engine driven ventilating fans or compressors are used, you must make an initial test of the inlet air of the fan or compressor, with the engines operating, to ensure that the air supply is not contaminated by engine exhaust.

(n) You must perform testing as often as necessary to ensure that the ventilation requirements of subsection (15) of this section are met.

(o) When rapid excavation machines are used, you must operate a continuous flammable gas monitor at the face with the sensor(s) placed as high and close to the front of the machine's cutter head as practicable.

(p) Whenever air monitoring indicates the presence of 5 ppm or more of hydrogen sulfide, you must conduct a test in the affected underground work area(s), at least at the beginning and midpoint of each shift, until the concentration of hydrogen sulfide has been less than 5 ppm for 3 consecutive days.

(i) Whenever hydrogen sulfide is detected in an amount exceeding 10 ppm, you must use a continuous sampling and indicating hydrogen sulfide monitor to monitor the affected work area.

(ii) You must inform employees when a concentration of 10 ppm hydrogen sulfide is exceeded.

(iii) The continuous sampling and indicating hydrogen sulfide monitor must be designed, installed, and maintained to provide a visual and aural alarm when the hydrogen sulfide concentration reaches 15 ppm to signal that additional measures, such as respirator use, increased ventilation, or evacuation, might be necessary to maintain hydrogen sulfide exposure below the permissible exposure limit.

(q) When the competent person determines, on the basis of air monitoring results or other information, that air contaminants may be present in sufficient quantity to be dangerous to life, you must:

(i) Prominently post a notice at all entrances to the underground job site to inform all entrants of the hazardous condition; and

(ii) Immediately increase sampling frequency levels to insure workers are not exposed to identified contaminants in excess of the permissible exposure limit(s); and

(iii) Ensure that all necessary precautions are taken to comply with pertinent requirements of this section, and chapter 296-62 WAC.

(r) Whenever 5% or more of the lower explosive limit for methane or other flammable gases is detected in any underground work area(s) or in the air return, you must take steps to increase ventilation air volume or otherwise control the gas concentration, unless the employer is operating in accordance with the potentially gassy or gassy operation requirements. Such additional ventilation controls may be discontinued when gas concentrations are reduced below 5% of the lower explosive limit, but must be reinstituted whenever the 5% level is exceeded.

(s) Whenever 10% or more of the lower explosive limit for methane or other flammable gases is detected in the vicinity of welding, cutting, or other hot work, you must suspend such work until the concentration of such flammable gas is reduced to less than 10% of the lower explosive limit.

(t) Whenever 20% or more of the lower explosive limit for methane or other flammable gases is detected in any underground work area(s) or in the air return:

(i) You must immediately withdraw all employees, except those necessary to eliminate the hazard, to a safe location above ground; and

(ii) Employees who remain underground to correct or eliminate the hazard described in (t) above must be equipped with approved, pressure demand mode, self-contained breathing apparatus, and must have received adequate training in the proper use of that equipment.

(iii) You must cut-off electrical power, except for acceptable pumping and ventilation equipment, to the area endangered by the flammable gas until the concentration of such gas is reduced to less than 20% of the lower explosive limit.

(14) **Additional monitoring for potentially gassy and gassy operations**. Operations which meet the criteria for potentially gassy and gassy operations set forth in subsection (13) of this section must be subject to the additional monitoring requirements of this subsection.

(a) You must conduct a test for oxygen content in the affected underground work areas and work areas immediately adjacent to such areas at least at the beginning and midpoint of each shift.

(b) When using rapid excavation machines, you must use continuous automatic flammable gas monitoring equipment to monitor the air at the heading, on the rib, and in the return air duct. The continuous monitor must signal the heading, and shut down electric power in the affected underground work area, except for acceptable pumping and ventilation equipment, when 20% or more of the lower explosive limit for methane or other flammable gases is encountered.

(i) You must use a manual flammable gas monitor as needed, but at least at the beginning and midpoint of each shift, to ensure that the limits prescribed in subsections (11) and (13) of this section are not exceeded. In addition, you must provide a manual electrical shut down control near the heading.

(ii) You must make local gas tests be made prior to and continuously during any welding, cutting, or other hot work.

(iii) In underground operations driven by drill-and-blast methods, you must test the air in the affected area for flammable gas prior to re-entry after blasting, and continuously when employees are working underground.

(c) Recordkeeping. You must maintain a record of all air quality tests above ground at the worksite and be made available to the director or his/her representatives upon request. The record must include the location, date, time, substance and amount monitored. You must retain records of exposures to toxic substances in accordance with Part B, chapter 296-62 WAC. You must retain all other air quality test records until completion of the project.

(15) **Ventilation.**

(a)

(i) You must supply fresh air to all underground work areas in sufficient quantities to prevent dangerous or harmful accumulation of dust, fumes, mists, vapors, or gases.

(ii) You must provide mechanical ventilation in all underground work areas except when the employer can demonstrate that natural ventilation provides the necessary air quality through sufficient air volume and air flow.

(b) You must supply a minimum of 200 cubic feet (5.7 m3) of fresh air per minute for each employee underground.

(c) The linear velocity of air flow in the tunnel bore, in shafts, and in all other underground work areas must be at least 30 feet (9.15 m) per minute where blasting or rock drilling is conducted, or where other conditions likely to produce dust, fumes, mists, vapors, or gases in harmful or explosive quantities are present.

(d) The direction of mechanical air flow must be reversible.

(e) You must not use air that has passed through underground oil or fuel-storage areas to ventilate working areas.

(f) Following blasting, ventilation systems must exhaust smoke and fumes to the outside atmosphere before work is resumed in affected areas.

(g) Ventilation doors must be designed and installed so that they remain closed when in use, regardless of the direction of the air flow.

(h) When ventilation has been reduced to the extent that hazardous levels of methane or flammable gas may have accumulated, a competent person must test all affected areas after ventilation has been restored and must determine whether the atmosphere is within flammable limits before any power, other than for acceptable equipment, is restored or work is resumed.

(i) Whenever the ventilation system has been shut down with all employees out of the underground area, you must only allow competent persons authorized to test for air contaminants underground until the ventilation has been restored and all affected areas have been tested for air contaminants and declared safe.

(j) When drilling rock or concrete, you must take appropriate dust control measures to maintain dust levels within limits set in chapter 296-155 WAC, Part B-1. Such measures may include, but are not limited to, wet drilling, the use of vacuum collectors, and water mix spray systems.

(k)

(i) Internal combustion engines, except diesel-powered engines on mobile equipment, are prohibited underground.

(ii) Mobile diesel-powered equipment used underground in atmospheres other than gassy operations must be either approved by MSHA in accordance with the provisions of 30 CFR Part 32 (formerly Schedule 24), or you must prove it to be fully equivalent to such MSHA-approved equipment, and must be operated in accordance with that Part. (Each brake horsepower of a diesel engine requires at least 100 cubic feet (28.32 m3) of air per minute for suitable operation in addition to the air requirements for personnel. Some engines may require a greater amount of air to ensure that the allowable levels of carbon monoxide, nitric oxide, and nitrogen dioxide are not exceeded.)

(iii) You must submit an application to the mining/explosives section, department of labor and industries, for permission to use specified diesel equipment in a specified underground area and it must include the following:

(A) The type of construction and complete identification data and specifications including analysis of the undiluted exhaust gases of the diesel equipment.

(B) The location where the diesel equipment is to be used.

(C) Before the diesel equipment is taken underground, you must obtain written permission from the department of labor and industries or its duly authorized representative. A satisfactory test on surface, to show that the exhaust gases do not exceed the maximum percentage of carbon monoxide permitted, is required.

(D) You must only use diesel equipment underground where the ventilation is controlled by mechanical means and must not be operated if the ventilating current is less than 100 CFM per horsepower based on the maximum brake horsepower of the engines.

(E) You must take air measurements at least once daily in the diesel engine working area and the measurements entered in the Underground Diesel Engine Record Book. Permissible maximum amounts of noxious gases are as follows:

At engine exhaust ports	Carbon Monoxide	.10%	1,000 pm[3]
Next to equipment	Carbon Monoxide	.0035%	35 ppm
General atmosphere	Carbon Monoxide	.0035%	35 ppm
General atmosphere	Nitrogen Dioxide	.0001%	1 ppm
General atmosphere	Aldehydes	.0002%	2 ppm

[3]Parts of vapor or gas per million parts of contaminated air by volume at 25°C and 760 mm Hg. pressure.

(l) Potentially gassy or gassy operations must have ventilation systems installed which must:

(i) Be constructed of fire-resistant materials; and

(ii) Have acceptable electrical systems, including fan motors.

(m) You must provide gassy operations with controls located aboveground for reversing the air flow of ventilation systems.

(n) In potentially gassy or gassy operations, wherever mine-type ventilation systems using an offset main fan installed on the surface are used, they must be equipped with explosion-doors or a weak-wall having an area at least equivalent to the cross-sectional area of the airway.

(16) **Illumination.**

(a) You must provide sufficient lighting in accordance with the requirements of chapter 296-155 WAC, Part B-1, to permit safe operations at the face as well as in the general tunnel or shaft area and at the employees' workplace.

(b) You must only use acceptable portable lighting within 50 feet (15.24 m) of any underground heading during explosive handling.

(17) **Fire prevention and control**. Fire prevention and protection requirements applicable to underground construction operations are found in Part D of this chapter except as modified by the following additional standards.

(a) Open flames and fires are prohibited in all underground construction operations except as permitted for welding, cutting, and other hot work operations.

(i) Smoking may be allowed only in areas free of fire and explosion hazards.

(ii) You must post readily visible signs prohibiting smoking and open flames in areas having fire or explosion hazards.

(iii) You must prohibit the carrying of matches, lighters, or other flame-producing smoking materials in all underground operations where fire or explosion hazards exist.

(b) You may store underground no more than a 24-hour supply of diesel fuel for the underground equipment used at the worksite.

(c) The piping of diesel fuel from the surface to an underground location is permitted only if:

(i) Diesel fuel is contained at the surface in a tank whose maximum capacity is no more than the amount of fuel required to supply for a 24-hour period the equipment serviced by the underground fueling station; and

(ii) The surface tank is connected to the underground fueling station by an acceptable pipe or hose system that is controlled at the surface by a valve, and at the shaft bottom by a hose nozzle; and

(iii) The pipe is empty at all times except when transferring diesel fuel from the surface tank to a piece of equipment in use underground; and

(iv) Hoisting operations in the shaft are suspended during refueling operations if the supply piping in the shaft is not protected from damage.

(d)

(i) You must not carry, store, or use gasoline underground.

(ii) Acetylene, liquefied petroleum gas, and methylacetylene propadiene stabilized gas may be used underground only for welding, cutting and other hot work, and only in accordance with Part H of this chapter and subsections (13), (15), (17), and (18) of this section.

(e) You must keep oil, grease, and diesel fuel stored underground in tightly sealed containers in fire-resistant areas at least 300 feet (91.44 m) from underground explosive magazines, and at least 100 feet (30.48 m) from shaft stations and steeply inclined passageways. Storage areas must be positioned or diked so that the contents of ruptured or overturned containers will not flow from the storage area.

(f) You must not store flammable or combustible materials above ground within 100 feet (30.48 m) of any access opening to any underground operation. Where this is not feasible because of space limitations at the job site, such materials may be located within the 100-foot limit, provided that:

(i) They are located as far as practicable from the opening; and

(ii) Either a fire-resistant barrier of not less than one-hour rating is placed between the stored material and the opening, or additional precautions are taken which will protect the materials from ignition sources.

(g) You must use fire-resistant hydraulic fluids in hydraulically actuated underground machinery and equipment unless such equipment is protected by a fire suppression system or by multipurpose fire extinguisher(s) rated at a sufficient capacity for the type and size of hydraulic equipment involved, but rated at least 4A:4OB:C.

(h)

(i) You must only use electrical installations in underground areas where oil, grease, or diesel fuel are stored for lighting fixtures.

(ii) Lighting fixtures in storage areas, or within 25 feet (7.62 m) of underground areas where oil, grease, or diesel fuel are stored, must be approved for Class I, Division 2 locations, in accordance with Part I of this chapter.

(i) You must clean up leaks and spills of flammable or combustible fluids immediately.

(j) You must provide a fire extinguisher of at least 4A:4OB:C rating or other equivalent extinguishing means at the head pulley and at the tail pulley of underground belt conveyors, and at 300-foot intervals along the belt.

(k) Any structure located underground or within 100 feet (30.48 m) of an opening to the underground must be constructed of material having a fire-resistance rating of at least one hour.

(18) **Welding, cutting, and other hot work**. In addition to the requirements of Part H of this chapter, the following requirements apply to underground welding, cutting, and other hot work.

(a) You must not permit more than the amount of fuel gas and oxygen cylinders necessary to perform welding, cutting, or other hot work during the next 24-hour period underground.

(b) You must install noncombustible barriers below welding, cutting, or other hot work being done in or over a shaft or raise.

(19) **Ground support.**

(a) In tunnels (other than hard rock) you must use timber sets, steel rings, steel frames, concrete liners, or other engineered tunnel support systems. Every tunnel support system must be designed by a licensed professional engineer. Design specifications must be available at the worksite.

(b) Portal areas. You must guard portal openings and access areas by shoring, fencing, head walls, shotcreting, or other equivalent protection to ensure safe access of employees and equipment. Adjacent areas must be scaled or otherwise secured to prevent loose soil, rock, or fractured materials from endangering the portal and access area.

(c) Subsidence areas. You must ensure ground stability in hazardous subsidence areas by shoring, by filling in, or by erecting barricades and posting warning signs to prevent entry.

(d) Underground areas.

(i)

(A) A competent person must inspect the roof, face, and walls of the work area at the start of each shift and as often as necessary to determine ground stability.

(B) You must protect competent persons conducting such inspections from loose ground by location, ground support, or equivalent means.

(ii) You must inspect ground conditions along haulageways and travelways inspected as frequently as necessary to ensure safe passage.

(iii) You must take down, scale, or support loose ground that might be hazardous to employees.

(iv) You must use torque wrenches wherever bolts that depend on torsionally applied force are used for ground support.

(v) A competent person must determine whether rock bolts meet the necessary torque, and must determine the testing frequency in light of the bolt system, ground conditions, and the distance from vibration sources.

(vi) You must provide suitable protection for employees exposed to the hazard of loose ground while installing ground support systems.

(vii) You must install support sets so that the bottoms have sufficient anchorage to prevent ground pressures from dislodging the support base of the sets. You must provide lateral bracing (collar bracing, tie rods, or spreaders) between immediately adjacent sets to ensure added stability.

(viii) You must promptly repair or replace damaged or dislodged ground supports that create a hazardous condition. When replacing supports, you must install the new supports before the damaged supports are removed.

(ix) You must use a shield or other type of support to maintain a safe travelway for employees working in dead-end areas ahead of any support replacement operation.

(e) Shafts.

(i) Shafts and wells over 4 feet (1.219 m) in depth that employees must enter must be supported by a steel casing, concrete pipe, timber, solid rock, or other suitable material.

(ii)

(A) The full depth of the shaft must be supported by casing or bracing except where the shaft penetrates into solid rock having characteristics that will not change as a result of exposure. Where the shaft passes through earth into solid rock, or through solid rock into earth, and where there is potential for shear, the casing or bracing must extend at least 5 feet (1.53 m) into the solid rock. When the shaft terminates in solid rock, the casing or bracing must extend to the end of the shaft or 5 feet (1.53 m) into the solid rock, whichever is less.

(B) The casing or bracing must extend 42 inches (1.07 m) plus or minus 3 inches (8 cm) above ground level, except that the minimum casing height may be reduced to 12 inches (0.3 m), provided that a standard railing is installed; that the ground adjacent to the top of the shaft is sloped away from the shaft collar to prevent entry of liquids; and that effective barriers are used to prevent mobile equipment operating near the shaft from jumping over the 12-inch (0.3 m) barrier.

(iii) After blasting operations in shafts, a competent person must determine if the walls, ladders, timbers, blocking, or wedges have loosened. If so, you must make necessary repairs before employees other than those assigned to make the repairs are allowed in or below the affected areas.

(f) Blasting. This subsection applies in addition to the requirements for blasting and explosives operations, including handling of misfires, which are found in chapter 296-52 WAC.

(i) You must keep blasting wires clear of electrical lines, pipes, rails, and other conductive material, excluding earth, to prevent explosives initiation or employee exposure to electric current.

(ii) Following blasting, an employee must not enter a work area until the air quality meets the requirements of subsection (13) of this section.

(g) Drilling.

(i) A competent person must inspect all drilling and associated equipment prior to each use. You must correct equipment defects affecting safety before the equipment is used.

(ii) You must inspect the drilling area for hazards before the drilling operation is started.

(iii) You must not allow employees on a drill mast while the drill bit is in operation or the drill machine is being moved.

(iv) When a drill machine is being moved from one drilling area to another, you must secure drill steel, tools, and other equipment and the mast must be placed in a safe position.

(v) You must provide receptacles or racks for storing drill steel located on jumbos.

(vi) You must warn employees working below jumbo decks whenever drilling is about to begin.

(vii) You must anchor drills on columns firmly before starting drilling, and you must retighten them as necessary thereafter.

(viii) You must provide mechanical means on the top deck of a jumbo for lifting unwieldy or heavy material.

(ix) When jumbo decks are over 10 feet (3.05 m) in height, you must install stairs wide enough for two persons.

(x) Jumbo decks more than 10 feet (3.05 m) in height must be equipped with guardrails on all open sides, excluding access openings of platforms, unless an adjacent surface provides equivalent fall protection.

(xi) You must only allow employees assisting the operator to ride on jumbos, unless the jumbo meets the requirements of subsection (20)(e) of this section.

Note: For additional requirements relating to portable fire extinguishers see WAC 296-800-300

(xii) Jumbos must be chocked to prevent movement while employees are working on them.

(xiii) You must maintain walking and working surfaces of jumbos to prevent the hazards of slipping, tripping, and falling.

(xiv) Jumbo decks and stair treads must be designed to be slip-resistant and secured to prevent accidental displacement.

(xv) Scaling bars must be available at scaling operations and you must maintain them in good condition at all times. You must not use blunted or severely worn bars.

(xvi) Before commencing the drill cycle, you must examine the face and lifters for misfires (residual explosives) and, if found, you must remove them before drilling commences at the face. You must not drill blasting holes through blasted rock (muck) or water.

(xvii) You must protect employees in a shaft either by location or by suitable barrier(s) if powered mechanical loading equipment is used to remove muck containing unfired explosives.

(xviii) You must post a caution sign reading "buried line," or similar wording where air lines are buried or otherwise hidden by water or debris.

(20) **Haulage.**

(a) A competent person must inspect haulage equipment before each shift.

(i) You must correct equipment defects affecting safety and health before the equipment is used.

(ii) Powered mobile haulage equipment must be provided with adequate brakes.

(iii) Power mobile haulage equipment, including trains, must have audible warning devices to warn employees to stay clear. The operator must sound the warning device before moving the equipment and whenever necessary during travel.

(iv) The operator must ensure that lights which are visible to employees at both ends of any mobile equipment, including a train, are turned on whenever the equipment is operating.

(v) In those cabs where glazing is used, the glass must be safety glass, or its equivalent, and you must maintain and clean it that vision is not obstructed.

(b) You must install antirollback devices or brakes on inclined conveyor drive units to prevent conveyors from inadvertently running in reverse. You must not permit employees to ride a power-driven chain, belt, or bucket conveyor unless the conveyor is specifically designed for the transportation of persons.

(c) Endless belt-type manlifts are prohibited in underground construction.

(d) General requirements also applicable to underground construction for use of conveyors in construction are found in chapter 296-155 WAC, Part R.

(e) No employee must ride haulage equipment unless it is equipped with seating for each passenger and protects passengers from being struck, crushed, or caught between other equipment or surfaces. Members of train crews may ride on a locomotive if it is equipped with handholds and nonslip steps or footboards. Requirements applicable to underground construction for motor vehicle transportation of employees are found in chapter 296-155 WAC, Part M.

(f) Conveyor lockout.

(i) Conveyors must be deenergized and locked out with a padlock, and tagged out with a "Do Not Operate" tag at any time repair, maintenance, or clean-up work is being performed on the conveyor.

(ii) Tags or push button stops are not acceptable.

(iii) You must not allow people to walk on conveyors except for emergency purposes and then only after the conveyor has been deenergized and locked out in accordance with (f) above, and persons can do so safely.

(g) You must not leave powered mobile haulage equipment, including trains, unattended unless the master switch or motor is turned off; operating controls are in neutral or park position; and the brakes are set, or equivalent precautions are taken to prevent rolling.

(h) Whenever rails serve as a return for a trolley circuit, both rails must be bonded at every joint and crossbonded every 200 feet (60.96 m).

(i) When dumping cars by hand, the car dumps must have tiedown chains, bumper blocks, or other locking or holding devices to prevent the cars from overturning.

(j) Rocker-bottom or bottom-dump cars must be equipped with positive locking devices to prevent unintended dumping.

(k) You must load and secure equipment to be hauled to prevent sliding or dislodgment.

(l)

(i) You must stop mobile equipment, including rail-mounted equipment, for manual connecting or service work, and;

(ii) Employees must not reach between moving cars during coupling operations.

(iii) You must not align, shift, or clean couplings on moving cars or locomotives.

(iv) You must use safety chains or other connections in addition to couplers to connect person cars or powder cars whenever the locomotive is uphill of the cars.

(v) When the grade exceeds one percent and there is a potential for runaway cars, you must use safety chains or other connections in addition to couplers to connect haulage cars or, as an alternative, the locomotive must be downhill of the train.

(vi) Such safety chains or other connections must be capable of maintaining connection between cars in the event of either coupler disconnect, failure or breakage.

(m) Parked rail equipment must be chocked, blocked, or have brakes set to prevent inadvertent movement.

(n) You must provide berms, bumper blocks, safety hooks, or equivalent means to prevent overtravel and overturning of haulage equipment at dumping locations.

(o) You must provide bumper blocks or equivalent stopping devices at all track dead ends.

(p)

(i) Only small handtools, lunch pails, or similar small items may be transported with employees in person cars, or on top of a locomotive.

(ii) When small hand tools or other small items are carried on top of a locomotive, the top must be designed or modified to retain them while traveling.

(q)

(i) Where switching facilities are available, you must pull occupied personnel cars. If personnel cars must be pushed and visibility of the track ahead is hampered, then a qualified person must be stationed in the lead car to give signals to the locomotive operator.

(ii) Crew trips must consist of personnel loads only.

(21) **Electrical safety**. This subsection applies in addition to the general requirements for electrical safety which are found in Part I of this chapter.

(a) Electric power lines must be insulated or located away from water lines, telephone lines, air lines, or other conductive materials so that a damaged circuit will not energize the other systems.

(b) Lighting circuits must be located so that movement of personnel or equipment will not damage the circuits or disrupt service.

(c) You must not use oil-filled transformers underground unless they are located in a fire-resistant enclosure suitably vented to the outside and surrounded by a dike to retain the contents of the transformers in the event of rupture.

(22) Hoisting unique to underground construction except as modified by this section, the provisions of chapter 296-155 WAC, Part L apply. Requirements for personnel hoists, material hoists, and elevators are found in Part R of this chapter and in this subsection.

(a) General requirements for cranes and hoists.

(i) You must secure or stack materials, tools, and supplies being raised or lowered, whether within a cage or otherwise, in a manner to prevent the load from shifting, snagging, or falling into the shaft.

(ii) A warning light suitably located to warn employees at the shaft bottom and subsurface shaft entrances must flash whenever a load is above the shaft bottom or subsurface entrances, or the load is being moved in the shaft. This subsection does not apply to fully enclosed hoistways.

(iii) Whenever a hoistway is not fully enclosed and employees are at the shaft bottom, you must stop conveyances or equipment at least 15 feet (4.57 m) above the bottom of the shaft and held there until the signalperson at the bottom of the shaft directs the operator to continue lowering the load, except that the load may be lowered without stopping if the load or conveyance is within full view of a bottom signalperson who is in constant voice communication with the operator.

(iv)

(A) Before maintenance, repairs, or other work is commenced in the shaft served by a cage, skip, or bucket, you must inform the operator and other employees in the area and give them suitable instructions.

(B) You must install a sign warning that work is being done in the shaft at the shaft collar, at the operator's station, and at each underground landing.

(v) Any connection between the hoisting rope and the cage or skip must be compatible with the type of wire rope used for hoisting.

(vi) You must maintain spin-type connections, where used, in a clean condition and protected from foreign matter that could affect their operation.

(vii) Cage, skip, and load connections to the hoist rope must be made so that the force of the hoist pull, vibration, misalignment, release of lift force, or impact will not disengage the connection. You may use only closed shackles for cage and skip rigging.

(viii) When using wire rope wedge sockets, you must provide means to prevent wedge escapement and to ensure that the wedge is properly seated.

(b) Additional requirements for cranes. Cranes must be equipped with a limit switch to prevent overtravel at the boom tip. Limit switches are to be used only to limit travel of loads when operational controls malfunction and you must not use them as a substitute for other operational controls.

(c) Additional requirements for hoists.

(i) Hoists must be designed so that the load hoist drum is powered in both directions of rotation, and so that brakes are automatically applied upon power release or failure.

(ii) Control levers must be of the “deadman type” which return automatically to their center (neutral) position upon release.

(iii) When a hoist is used for both personnel hoisting and material hoisting, load and speed ratings for personnel and for materials must be assigned to the equipment.

(iv) You must not use hoist machines with cast metal parts.

(v) Material hoisting may be performed at speeds higher than the rated speed for personnel hoisting if the hoist and components have been designed for such higher speeds and if shaft conditions permit.

(vi) Employees must not ride on top of any cage, skip, or bucket except when necessary to perform inspection or maintenance of the hoisting system, in which case you must protect them by a body belt/harness system to prevent falling.

(vii) You must not hoist personnel and materials (other than small tools and supplies secured in a manner that will not create a hazard to employees) together in the same conveyance. However, if the operator is protected from the shifting of materials, then the operator may ride with materials in cages or skips which are designed to be controlled by an operator within the cage or skip.

(viii) Line speed must not exceed the design limitations of the systems.

(ix) Hoists must be equipped with landing level indicators at the operator's station. Marking of the hoist rope does not satisfy this requirement.

(x) Whenever glazing is used in the hoist house, it must be safety glass, or its equivalent, and be free of distortions and obstructions.

(xi) A fire extinguisher that is rated at least 2A:10B:C (multipurpose, dry chemical) must be mounted in each hoist house.

Note: For additional requirements relating to portable fire extinguishers see WAC 296-800-300.

(xii) Hoist controls must be arranged so that the operator can perform all operating cycle functions and reach the emergency power cutoff without having to reach beyond the operator's normal operating position.

(xiii) Hoists must be equipped with limit switches to prevent overtravel at the top and bottom of the hoistway.

(xiv) You must not use limit switches are to be used only to limit travel of loads when operational controls malfunction and as a substitute for other operational controls.

(xv) You must provide hoist operators with a closed-circuit voice communication system to each landing station, with speaker-microphones so located that the operator can communicate with individual landing stations during hoist use.

(xvi) When sinking shafts 75 feet (22.86 m) or less in depth, cages, skips, and buckets that may swing, bump, or snag against shaft sides or other structural protrusions must be guided by fenders, rails, ropes, or a combination of those means.

(xvii) When sinking shafts more than 75 feet (22.86 m) in depth, all cages, skips, and buckets must be rope or rail-guided to within a rail length from the sinking operation.

(xviii) Cages, skips, and buckets in all completed shafts, or in all shafts being used as completed shafts, must be rope or rail-guided for the full length of their travel.

(xix) Wire rope used in load lines of material hoists must be capable of supporting, without failure, at least 5 times the maximum intended load or the factor recommended by the rope manufacturer, whichever is greater. Refer to chapter 296-155 WAC, Part R, for design factors for wire rope used in personnel hoists. The design factors must be calculated by dividing the breaking strength of wire rope, as reported in the manufacturer's rating tables, by the total static load, including the weight of the wire rope in the shaft when fully extended.

(xx) A competent person must visually check all hoisting machinery, equipment, anchorages, and hoisting rope at the beginning of each shift and during hoist use, as necessary.

(xxi) Each safety device must be checked by a competent person at least weekly during hoist use to ensure suitable operation and safe condition.

(xxii) In order to ensure suitable operation and safe condition of all functions and safety devices, you must inspect and load test each hoist assembly to 100% of its rated capacity: At the time of installation; after any repairs or alterations affecting its structural integrity; after the operation of any safety device; and annually when in use. You must prepare a certification record which includes the date each inspection and load-test was performed; the signature of the person who performed the inspection and test; and a serial number or other identifier for the hoist that was inspected and tested. You must maintain the most recent certification record on file until completion of the project.

(xxiii) Before hoisting personnel or material, the operator must perform a test run of any cage or skip whenever it has been out of service for one complete shift, and whenever the assembly or components have been repaired or adjusted.

(xiv) You must correct unsafe conditions before using the equipment.

(d) Additional requirements for personnel hoists.

(i) Hoist drum systems must be equipped with at least two means of stopping the load, each of which must be capable of stopping and holding 150% of the hoist's rated line pull. A broken-rope safety, safety catch, or arrestment device is not a permissible means of stopping under this subsection.

(ii) The operator must remain within sight and sound of the signals at the operator's station.

(iii) All sides of personnel cages must be enclosed by one-half inch (12.70 mm) wire mesh (not less than No. 14 gauge or equivalent) to a height of not less than 6 feet (1.83 m). However, when the cage or skip is being used as a work platform, its sides may be reduced in height to 42 inches (1.07 m) when the conveyance is not in motion.

(iv) All personnel cages must be provided with a positive locking door that does not open outward.

(v) All personnel cages must be provided with a protective canopy. The canopy must be made of steel plate, at least 3/16 -inch (4.763 mm) in thickness, or material of equivalent strength and impact resistance. The canopy must be sloped to the outside, and so designed that a section may be readily pushed upward to afford emergency egress. The canopy must cover the top in such a manner as to protect those inside from objects falling in the shaft.

(vi) Personnel platforms operating on guide rails or guide ropes must be equipped with broken-rope safety devices, safety catches, or arrestment devices that will stop and hold 150% of the weight of the personnel platform and its maximum rated load.

(vii) During sinking operations in shafts where guides and safeties are not yet used, the travel speed of the personnel platform must not exceed 200 feet (60.96 m) per minute. You must install governor controls set for 200 feet (60.96 m) per minute in the control system and they must be used during personnel hoisting.

(viii) The personnel platform may travel over the controlled length of the hoistway at rated speeds up to 600 feet (182.88 m) per minute during sinking operations in shafts where guides and safeties are used.

(ix) The personnel platform may travel at rated speeds greater than 600 feet (182.88 m) per minute in complete shafts.

[Statutory Authority: RCW 49.17.010, .040, .050, and .060. 16-09-085 (Order 15-08), § 296-155-730, filed 04/19/16, effective, 05/20/16. Statutory Authority: RCWs 47.17.010, 49.17.040, 49.17.050, 49.17.440 and 49.17.060. 12-01-086 (Order 08-32), § 296-155-730, filed 12/20/11, effective 02/01/12. Statutory Authority: RCW 49.17.010, .040, .050, and .060. 05-03-093 (Order 04-41), § 296-155-730, filed 01/18/01, effective 03/01/05. Statutory Authority: RCW 49.17.010, .040, .050. 99-10 (Order 98-10), § 296-155-730, filed 05/04/99, effective 09/01/99. Statutory Authority: Chapter 49.17.010, .040, .050, .060 RCW. 98-05-046 (Order 97-10) § 296-155-730, filed 2/13/98, effective 4/15/98. Chapter 49.17 RCW. 95-04-007, 296-155-730, filed 1/18/95, effective 3/1/95; 94-15-096 (Order 94-07), § 296-155-730, filed 7/20/94, effective 9/20/94; 91-11-070 (Order 91-01), § 296-155-730, filed 5/20/91, effective 6/20/91; 90-03-029 (Order 89-20), § 296-155-730, filed 1/11/90, effective 2/26/90. Statutory Authority: RCW 49.17.040 and 49.17.050. 86-03-074 (Order 86-14), § 296-155-730, filed 1/21/86; Order 76-29, § 296-155-730, filed 9/30/76; Order 74-26, § 296-155-730, filed 5/7/74, effective 6/6/74.]

WAC 296-155-735 Caissons.

(1) Wherever, in caisson work in which compressed air is used, and the working chamber is less than 11 feet in length, and when such caissons are at any time suspended or hung while work is in progress so that the bottom of the excavation is more than 9 feet below the deck of the working chamber, you must erect a shield therein for the protection of the employees.

(2) You must subject shafts to a hydrostatic or air pressure test, at which pressure they must be tight. The shaft must be stamped on the outside shell about 12 inches from each flange to show the pressure to which they have been subjected.

(3) Whenever a shaft is used, you must provide it, where space permits, with a safe, proper, and suitable staircase for its entire length, including landing platforms, not more than 20 feet apart. Where this is impracticable, you must install suitable ladders with landing platforms located about 20 feet apart to break the climb.

(4) You must provide all caissons, having a diameter or side greater than 10 feet with a man lock and shaft for the exclusive use of employees.

(5) In addition to the gauge in the locks, you must provide an accurate gauge on the outer and inner side of each bulkhead. These gauges must be accessible at all times and kept in accurate working order.

(6) In caisson operations where employees are exposed to compressed air working environments, you must comply with the requirements contained in WAC 296-155-745.

[Statutory Authority: RCW 49.17.010, .040, .050, and .060. 16-09-085 (Order 15-08), § 296-155-735, filed 04/19/16, effective, 05/20/16. Order 74-26, § 296-155-735, filed 5/7/74, effective 6/6/74.]

WAC 296-155-740 Cofferdams.

(1) If overtopping of the cofferdam by high waters is possible, you must provide means for controlled flooding of the work area.

(2) You must develop and post warning signals for evacuation of employees in case of emergency.

(3) You must provide cofferdam walkways, bridges, or ramps with at least two means of rapid exit, and guardrails as specified in Part C-1 of this chapter.

(4) You must install manways and ladderways separately from the hoistways and partitioned off to prevent hoisted materials from protruding into or falling into manways and/or ladderways.

(5) Pumping equipment must be located on substantially constructed platforms and where installed in such a position that persons must work below, toe boards must be installed on the platform.

(6) You must protect cofferdams located close to navigable shipping channels from vessels in transit, where possible.

[Statutory Authority: RCW 49.17.010, .040, .050, and .060. 16-09-085 (Order 15-08), § 296-155-740, filed 04/19/16, effective, 05/20/16. Statutory Authority: RCW 49.17.010, .040, .050, and .060. 13-04-073 (Order 06-08), § 296-155-740, filed 02/04/13, effective 04/01/13. Chapter 49.17 RCW. 96-24-051, (Order 96-05), § 296-155-740, filed 11/27/96, effective 02/01/97. 95-10-016, § 296-155-740, filed 4/25/95, effective 10/1/95; Order 74-26, § 296-155-740, filed 5/7/74, effective 6/6/74.]

WAC 296-155-745 Compressed air.

(1) **General provisions.**

(a) There must be present, at all times, at least one competent person designated by and representing the employer, who must be familiar with this part in all respects and responsible for full compliance with these and other applicable parts.

(b) You must instruct every employee in the rules and regulations which concern their safety or the safety of others.

(2) **Medical attendance, examination, and regulations.**

(a) You must retain one or more licensed physicians familiar with and experienced in the physical requirements and the medical aspects of compressed air work and the treatment of decompression illness. They must be available at all times while work is in progress in order to provide medical supervision of employees employed in compressed air work. They must be physically qualified and be willing to enter a pressurized environment.

(b) You must not permit any employee to enter a compressed air environment until they have been examined by the physician and reported to be physically qualified to engage in such work.

(c) In the event an employee is absent from work for 10 days, or is absent due to sickness or injury, they must not resume work until they are reexamined by the physician, and their physical condition reported, as provided in this subsection, to be such as to permit them to work in compressed air.

(d) After an employee has been employed continuously in compressed air for a period designated by the physician, but not to exceed one year, the employee must be reexamined by the physician to determine if they are still physically qualified to engage in compressed air work.

(e) Such physician must at all times keep a complete and full record of examinations made by themselves. The physician must also keep an accurate record of any decompression illness or other illness or injury incapacitating any employee for work, and of all loss of life that occurs in the operation of a tunnel, caisson, or other compartment in which compressed air is used.

(f) Records must be available for the inspection by the director or their representatives, and a copy thereof must be forwarded to the department within 48 hours following the occurrence of the accident, death, injury, or decompression illness. It must state as fully as possible the cause of said death or decompression illness, and the place where the injured or sick employee was taken, and such other relative information as may be required by the director.

(g) You must provide a fully equipped first-aid station at each tunnel project regardless of the number of persons employed. An ambulance or transportation suitable for a litter case must be at each project.

(h) Where tunnels are being excavated from portals more than 5 road miles apart, you must provide a first-aid station and transportation facilities at each portal.

(i) You must establish and maintain a medical lock in immediate working order whenever air pressure in the working chamber is increased above the normal atmosphere.

(j) The medical lock must:

(i) Have at least 6 feet of clear headroom at the center, and be subdivided into not less than two compartments;

(ii) Be readily accessible to employees working under compressed air;

(iii) Be kept ready for immediate use for at least 5 hours subsequent to the emergence of any employee from the working chamber;

(iv) Be properly heated, lighted and ventilated;

(v) Be maintained in a sanitary condition;

(vi) Have a nonshatterable port through which the occupant(s) may be kept under constant observation;

(vii) Be designed for a working pressure of 75 p.s.i.g.;

(viii) Be equipped with internal controls which may be overridden by external controls;

(ix) Be provided with air pressure gauges to show the air pressure within each compartment to observers inside and outside the medical lock;

(x) Be equipped with a manual type sprinkler system that can be activated inside the lock or by the outside lock tender;

(xi) Be provided with oxygen lines and fittings leading into external tanks. The lines must be fitted with check valves to prevent reverse flow. The oxygen system inside the chamber must be of a closed circuit design and be so designed as to automatically shut off the oxygen supply whenever the fire system is activated.

(xii) Be in constant charge of an attendant under the direct control of the retained physician. You must train the attendant in the use of the lock and suitably instructed regarding steps to be taken in the treatment of employee exhibiting symptoms compatible with a diagnosis of decompression illness;

(xiii) Be adjacent to an adequate emergency medical facility;

(xiv) The medical facility must be equipped with demand-type oxygen inhalation equipment approved by the U.S. Bureau of Mines or Mine Safety and Health Administration (MSHA) and the National Institute for Occupational Safety and Health (NIOSH);

(xv) Be capable of being maintained at a temperature, in use, not to exceed 90°F. nor be less than 70°F.; and

(xvi) Be provided with sources of air, free of oil and carbon monoxide, for normal and emergency use, which are capable of raising the air pressure in the lock from 0 to 75 p.s.i.g. in 5 minutes.

(k) You must furnish identification badges to all employees, indicating that the wearer is a compressed air worker. You must keep a permanent record of all identification badges issued. The badge must give the employee's name, address of the medical lock, the telephone number of the licensed physician for the compressed air project, and contain instructions that in case of emergency of unknown or doubtful cause or illness, the wearer must be rushed to the medical lock. The badge must be worn at all times-off the job, as well as on the job.

(3) **Telephone and signal communication.** You must maintain effective and reliable means of communication, such as bells, whistles, or telephones, at all times between all the following locations;

(a) The working chamber face;

(b) The working chamber side of the man lock near the door;

(c) The interior of the man lock;

(d) Lock attendant's station;

(e) The compressor plant;

(f) The first-aid station;

(g) The emergency lock (if one is required); and

(h) The special decompression chamber (if one is required).

(4) **Signs and records.**

(a) You must post the time of decompression in each man lock as follows:

TIME OF DECOMPRESSION FOR THIS LOCK

. . . . . pounds to . . . . . pounds in . . . . . minutes.
. . . . . pounds to . . . . . pounds in . . . . . minutes.

(Signed by)_____
(Superintendent)

This form must be posted in the man lock at all times.

(b) You must conspicuously post any code of signals used near workplace entrances and such other locations as may be necessary to bring them to the attention of all employees concerned.

(c) For each 8-hour shift, you must keep a record of employees employed under air pressure by an employee who must remain outside the lock near the entrance. This record must show the period each employee spends in the air chamber and the time taken from decompression. You must submit a copy to the appointed physician after each shift.

(5) **Compression.**

(a) You must instruct every employee going under air pressure for the first time on how to avoid excessive discomfort.

(b) During the compression of employees, you must not increase the pressure to more than 3 p.s.i.g. within the first minute. You must hold the pressure at 3 p.s.i.g. and again at 7 p.s.i.g. sufficiently long to determine if any employees are experiencing discomfort.

(c) After the first minute you must raise uniformly and at a rate not to exceed 10 p.s.i. per minute.

(d) If any employee complains of discomfort, you must hold the pressure to determine if the symptoms are relieved. If, after 5 minutes the discomfort does not disappear, the lock attendant must gradually reduce the pressure until the employee signals that the discomfort has ceased. If the employee does not indicate that the discomfort has disappeared, the lock attendant must reduce the pressure to atmospheric and the employee must be released from the lock.

(e) You must not subject any employee to pressure exceeding 50 pounds per square inch except in an emergency.

(6) **Decompression.**

(a) Decompression to normal condition must be in accordance with the decompression tables in Appendix A of this part.

(b) In the event it is necessary for an employee to be in compressed air more than once in a 24-hour period, the appointed physician must be responsible for the establishment of methods and procedures of decompression applicable to repetitive exposures.

(c) If decanting is necessary, the appointed physician must establish procedures before any employee is permitted to be decompressed by decanting methods. The period of time that the employees spend at atmospheric pressure between the decompression following the shift and recompression must not exceed 5 minutes.

(7) **Man locks and special decompression chambers.**

(a) Man locks.

(i) Except in emergency, you must not permit any employees employed in compressed air to pass from the working chamber to atmospheric pressure until after decompression, in accordance with the procedures in this part.

(ii) The lock attendant in charge of a man lock must be under the direct supervision of the appointed physician. The lock attendant must be stationed at the lock controls on the free air side during the period of compression and decompression and must remain at the lock control station whenever there are persons in the working chamber or in the man lock.

(iii) Except where air pressure in the working chamber is below 12 p.s.i.g., each man lock must be equipped with automatic controls which, through taped programs, cams, or similar apparatus, must automatically regulate decompressions. It must also be equipped with manual controls to permit the lock attendant to override the automatic mechanism in the event of an emergency, as provided in item (viii) of this subdivision.

(iv) A manual control, which can be used in the event of an emergency, must be placed inside the man lock.

(v) A clock, thermometer, and continuous recording pressure gauge with a 4-hour graph must be installed outside of each man lock and must be changed prior to each shift's decompression. The chart must be of sufficient size to register a legible record of variations in pressure within the man lock and must be visible to the lock attendant. You must submit a copy of each graph to the appointed physician after each shift. In addition, a pressure gauge, clock, and thermometer must also be installed in each man lock. Additional fittings must be provided so that the test gauges may be attached whenever necessary.

(vi) Except where air pressure is below 12 p.s.i.g. and there is no danger of rapid flooding, all caissons having a working area greater than 150 square feet, and each bulkhead in tunnels of 14 feet or more in diameter, or equivalent area, must have at least two locks in perfect working condition, one of which must be used exclusively as a man lock, the other, as a materials lock.

(vii) Where only a combination man-and-materials lock is required, this single lock must be of sufficient capacity to hold the employees constituting two successive shifts.

(viii) Emergency locks must be large enough to hold an entire heading shift and a limit maintained of 12 p.s.i.g. There must be a chamber available for oxygen decompression therapy to 28 p.s.i.g.

(ix) The man lock must be large enough so that those using it are not compelled to be in a cramped position and must not have less than 5 feet clear head room at the center and a minimum of 30 cubic feet of air space per occupant.

(x) Locks on caissons must be so located that the bottom door must be not less than 3 feet above the water level surrounding the caisson on the outside. (The water level, where it is affected by tides, is construed to mean high tide.)

(xi) In addition to the pressure gauge in the locks, you must maintain an accurate pressure gauge on the outer and inner side of each bulkhead. These gauges must be accessible at all times and you must keep them in accurate working order.

(xii) Man locks must have an observation port at least 4 inches in diameter located in such a position that all occupants of the man lock may be observed from the working chamber and from the free air side of the lock.

(xiii) You must provide adequate ventilation in the lock.

(xiv) You must maintain man locks at a minimum temperature of 70°F.

(xv) When locks are not in use and employees are in the working chamber, you must keep lock doors open to the working chamber, where practicable.

(xvi) You must make provisions to allow for rescue parties to enter the tunnel if the working force is disabled.

(xvii) You must provide a special decompression chamber of sufficient size to accommodate the entire force of employees being decompressed at the end of a shift whenever the regularly established working period requires total time of decompression exceeding 75 minutes.

(b) Special decompression chamber.

(i) The headroom in the special decompression chamber must be not less than a minimum 7 feet and the cubical content must provide at least 50 cubic feet of airspace for each employee. For each occupant, you must provide 4 square feet of free walking area and 3 square feet of seating space, exclusive of area required for lavatory and toilet facilities. You must base the rated capacity on the stated minimum space per employee and you must post it at the chamber entrance. You must not exceed the posted capacity, except in case of emergency.

(ii) Each special decompression chamber must be equipped with the following:

(A) A clock or clocks suitably placed so that the attendant and the chamber occupants can readily ascertain the time;

(B) Pressure gauges which will indicate to the attendants and to the chamber occupants the pressure in the chamber;

(C) Valves to enable the attendant to control the supply and discharge of compressed air into and from the chamber.

(D) Valves and pipes, in connection with the air supply and exhaust, arranged so that the chamber pressure can be controlled from within and without;

(E) Effective means of oral intercommunication between the attendant, occupants of the chamber, and the air compressor plant; and

(F) An observation port at the entrance to permit observation of the chamber occupants.

(iii) Seating facilities in special decompression chambers must be so arranged as to permit a normal sitting posture without cramping. You must provide seating space, not less than 18 inches by 24 inches wide, per occupant.

(iv) You must provide adequate toilet and washing facilities, in a screened or enclosed recess, Toilet bowls must have a built-in protector on the rim so that an air space is created when the seat lid is closed.

(v) Fresh and pure drinking water must be available. This may be accomplished by either piping water into the special decompression chamber and providing drinking fountains, or by providing individual canteens, or by some other sanitary means. Community drinking vessels are prohibited.

(vi) No refuse or discarded material of any kind must be permitted to accumulate, and you must keep the chamber clean.

(vii) Unless the special decompression chamber is serving as the man lock to atmospheric pressure, the special decompression chamber must be situated, where practicable, adjacent to the man lock on the atmospheric pressure side of the bulkhead. You must provide a passageway, connecting the special chamber with the man lock, to permit employees in the process of decompression to move from the man lock to the special chamber without a reduction in the ambient pressure from that designated for the next stage of decompression. The passageway must be so arranged as to not interfere with the normal operation of the man lock, nor with the release of the occupants of the special chamber to atmospheric pressure upon the completion of the decompression procedure.

(8) **Compressor plant and air supply.**

(a) At all times there must be a thoroughly experienced, competent, and reliable person on duty at the air control valves as a gauge tender who must regulate the pressure in the working areas. During tunneling operations, one gauge tender may regulate the pressure in not more than two headings: Provided; That the gauges and controls are all in one location. In caisson work, there must be a gauge tender for each caisson.

(b) The low air compressor plant must be of sufficient capacity to not only permit the work to be done safely, but must also provide a margin to meet emergencies and repairs.

(c) Low air compressor units must have at least two independent and separate sources of power supply and each must be capable of operating the entire low air plant and its accessory systems.

(d) The capacity, arrangement, and number of compressors must be sufficient to maintain the necessary pressure without overloading the equipment and to assure maintenance of such pressure in the working chamber during periods of breakdown, repair, or emergency.

(e) You must periodically switch from one independent source of power supply to the other to ensure that workability of the apparatus in an emergency.

(f) You must provide duplicate low-pressure air feedlines and regulating valves between the source of air supply and a point beyond the locks with one of the lines extending to within 100 feet of the working face.

(g) All high-pressure and low-pressure air supply lines must be equipped with check valves.

(h) Low-pressure air must be regulated automatically. In addition, you must provide manually operated valves for emergency conditions.

(i) The air intakes for all air compressors must be located at a place where fumes, exhaust gases, and other air contaminants will be at a minimum.

(j) Gauges indicating the pressure in the working chamber must be installed in the compressor building, the lock attendant's station, and at the employer's field office.

(9) **Ventilation and air quality.**

(a) You must provide and operate exhaust valves and exhaust pipes so that the working chamber is well ventilated, and there are no pockets of dead air. Outlets may be required at intermediate points along the main low-pressure air supply line to the heading to eliminate such pockets of dead air. The quantity of ventilation air must be not less than 30 cubic feet per minute.

(b) You must analyze the air in the workplace not less than once each shift, and you must keep records of such tests on file at the place where the work is in progress. The test results must be within the threshold limit values specified in part B of this chapter, for hazardous gases, and within 10% of the lower explosive limit of flammable gases. If these limits are not met, you must take immediate action to correct the situation.

(c) You must maintain the temperature of all working chambers which are subjected to air pressure, by means of after-coolers or other suitable devices, at a temperature not to exceed 85°F.

(d) You must provide forced ventilation during decompression. During the entire decompression period, you must provide forced ventilation through chemical or mechanical air purifying devices that will ensure a source of fresh air.

(e) Whenever heat-producing machines (moles, shields) are used in compressed air tunnel operations, you must provide a positive means of removing the heat build-up at the heading.

(10) **Electricity.**

(a) All lighting in compressed-air chambers must be by electricity exclusively, and you must use two independent electric-lighting systems with independent sources of supply. You must arrange the emergency source to become automatically operative in the event of failure of the regularly used source.

(b) The minimum intensity of light on any walkway, ladder, stairway, or working level must be not less than 10 foot-candles, and in all workplaces the lighting must at all times be such as to enable employees to see clearly.

(c) All electrical equipment, and wiring for light and power circuits, must comply with requirements of Part I, of this standard, for use in damp, hazardous, high temperature, and compressed air environments.

(d) External parts of lighting fixtures and all other electrical equipment, when within 8 feet of the floor, must be constructed of noncombustible, nonabsorptive, insulating materials, except that metal may be used if it is effectively grounded.

(e) Portable lamps must be equipped with noncombustible, nonabsorptive, insulating sockets, approved handles, basket guards, and approved cords.

(f) The use of worn or defective portable and pendant conductors is prohibited.

(11) **Sanitation.**

(a) You must provide sanitary, heated, lighted, and ventilated dressing rooms and drying rooms for all employees engaged in compressed air work. Such rooms must contain suitable benches and lockers. You must provide bathing accommodations (showers at the ratio of one to 10 employees per shift), equipped with running hot and cold water, and suitable and adequate toilet accommodations. You must provide one toilet for each 15 employees, or fractional part thereof.

(b) When the toilet bowl is shut by a cover, there should be an air space so that the bowl or bucket does not implode when pressure is increased.

(c) You must keep all parts of caissons and other working compartments in a sanitary condition.

(12) **Fire prevention and protection.**

(a) Firefighting equipment must be available at all times and you must maintain it in working condition.

(b) While welding or flame-cutting is being done in compressed air, a firewatch with a fire hose or approved extinguisher must stand by until such operation is completed.

(c) You must provide shafts and caissons containing flammable material of any kind, either above or below ground, with a waterline and a fire hose connected thereto, so arranged that all points of the shaft or caisson are within reach of the hose stream.

(d) Fire hose must be at least 1 1/2 inches in nominal diameter; the water pressure must at all times be adequate for efficient operation of the type of nozzle used; and the water supply must be such as to ensure an uninterrupted flow. Fire hose, when not in use, must be located or guarded to prevent injury thereto.

(e) You must provide the power house, compressor house, and all buildings housing ventilating equipment, with at least one hose connection in the waterline, with a fire hose connected thereto. You must maintain a fire hose within reach of structures of wood over or near shafts.

(f) Tunnels must be provided with a two-inch minimum diameter waterline extending into the working chamber and to within 100 feet of the working face. Such line must have hose outlets with 100 feet of fire hose attached and maintained as follows: One at the working face; one immediately inside of the bulkhead of the working chamber; and one immediately outside such bulkhead. In addition, hose outlets must be provided at 200-foot intervals throughout the length of the tunnel, and 100 feet of fire hose must be attached to the outlet nearest to any location where flammable material is being kept or stored or where any flame is being used.

(g) In addition to fire hose protection required by this part, on every floor of every building not under compressed air, but used in connection with the compressed air work, you must provide at least one approved fire extinguisher of the proper type for the hazards involved. You must provide at least two approved fire extinguishers in the working chamber as follows: One at the working face and one immediately inside the bulkhead (pressure side). Extinguishers in the working chamber must use water as the primary extinguishing agent and must not use any extinguishing agent which could be harmful to the employees in the working chamber. You must protect the extinguisher from damage.

(h) You must not use or store highly combustible materials in the working chamber. You must not use wood, paper, and similar combustible material in the working chamber in quantities which could cause a fire hazard. The compressor building must be constructed of noncombustible material.

(i) Man locks must be equipped with a manual type fire extinguisher system that can be activated inside the man lock and also by the outside lock attendant. In addition, you must provide a fire hose and portable fire extinguisher inside and outside the man lock. The portable fire extinguisher must be the dry chemical type.

Note: For additional requirements relating to portable fire extinguishers see WAC 296-800-300.

(j) Equipment, fixtures, and furniture in man locks and special decompression chambers must be constructed of noncombustible materials. Bedding, etc., must be chemically treated so as to be fire resistant.

(k) Head frames must be constructed of structural steel or open frame-work fireproofed timber. Head houses and other temporary surface buildings or structures within 100 feet of the shaft, caisson, or tunnel opening must be built of fire-resistant materials.

(l) You must not store any oil, gasoline, or other combustible materials within 100 feet of any shaft, caisson, or tunnel opening, except that oils may be stored in suitable tanks in isolated fireproof buildings, provided such buildings are not less than 50 feet from any shaft, caisson, or tunnel opening, or any building directly connected thereto.

(m) You must take positive means to prevent leaking flammable liquids from flowing into the areas specifically mentioned in the preceding subdivision.

(n) All explosives used in connection with compressed air work must be selected, stored, transported, and used as specified in part T of this chapter.

(13) **Bulkheads and safety screens.**

(a) Intermediate bulkheads with locks, or intermediate safety screens or both, are required where there is danger of rapid flooding.

(b) In tunnels 16 feet or more in diameter, you must provide hanging walkways from the face to the man lock as high in the tunnel as practicable, with at least 6 feet of head room. Walkways must be constructed of noncombustible material. You must securely install standard railings throughout the length of all walkways on open sides in accordance with Part C-1 of this chapter. Where walkways are ramped under safety screens, you must skidproof the walkway surface by cleats or by equivalent means.

(c) You must test bulkheads used to contain compressed air, where practicable, to prove their ability to resist the highest air pressure which may be expected to be used.

[Statutory Authority: RCW 49.17.010, .040, .050, and .060. 16-09-085 (Order 15-08), § 296-155-745, filed 04/19/16, effective, 05/20/16. Statutory Authority: RC W 49.17.010, .040, .050, and .060. 13-04-073 (Order 06-08), § 296-155-745, filed 02/04/13, effective 04/01/13. Statutory Authority: Chapter 49.17 RCW. 96-24-051, (Order 96-05), § 296-155-745, filed 11/27/96, effective 02/01/97. 95-10-016, § 296-155-745, filed 4/25/95, effective 10/1/95; 94-15-096 (Order 94-07), § 296-155-745, filed 7/20/94, effective 9/20/94; 88-23-054 (Order 88-25), § 296-155-745, filed 11/14/88; Order 74-26, § 296-155-745, filed 5/7/74, effective 6/6/74.]

WAC 296-155-74501 Appendix A-Decompression tables.

APPENDIX A-DECOMPRESSION TABLES

(1) **Explanation**. The decompression tables are computed for working chamber pressures from 0 to 14 pounds, and from 14 to 50 pounds per square inch gauge inclusive by 2-pound increments and for exposure times for each pressure extending from one-half to over 8 hours inclusive. Decompressions will be conducted by two or more stages with a maximum of four stages, the latter for a working chamber pressure of 40 pounds per square inch gauge or over. Stage 1 consists of a reduction in ambient pressure ranging from 10 to a maximum of 16 pounds per square inch, but in no instance will the pressure be reduced below 4 pounds at the end of stage 1. This reduction in pressure in stage 1 will always take place at a rate not greater than 5 pounds per minute.

Further reduction in pressure will take place during stage 2 and subsequent stages as required at a slower rate, but in no event at a rate greater than 1 pound per minute.

Decompression Table No. 1 indicates in the body of the table the total decompression time in minutes for various combinations of working chamber pressure and exposure time.

Decompression Table No. 2 indicates for the same various combinations of working chamber pressure and exposure time the following:

(a) The number of stages required;

(b) The reduction in pressure and the terminal pressure for each required stage;

(c) The time in minutes through which the reduction in pressure is accomplished for each required stage;

(d) The pressure reduction rate in minutes per pound for each required stage;

Important Note: The pressure reduction in each stage is accomplished at a uniform rate. Do not interpolate between values shown on the tables. Use the next higher value of working chamber pressure or exposure time should the actual working chamber pressure or the actual exposure time, respectively, fall between those for which calculated values are shown in the body of the tables.

Examples:

Example No. 1:

4 hours working period at 20 pounds gauge.

Decompression Table No. 1:

20 pounds for 4 hours, total decompression time. 43 minutes.

Decompression Table No. 2:

Stage 1: Reduce pressure from 20 pounds to 4 pounds

at the uniform rate of 5 pounds per minute.

Elapsed time stage 1: 16/5- 3 minutes.

Stage 2 (final stage): Reduce pressure at a uniform rate

from 4 pounds to 0-pound gage over a period of 40 minutes.

Rate-0.10 per pound per minute or 10 minutes per pound.

Stage 2 (final) elapsed time. 40 minutes.

Total time ..... 43 minutes

Example No. 2:

5-hour working period at 24 pounds gage.

Decompression Table No. 1:

24 pounds for 5 hours, total decompression time. 117 minutes.

Decompression Table No. 2:

Stage 1: Reduce pressure from 24 pounds to 8 pounds at the uniform rate of 5 pounds per minute.

Elapsed time stage 1: 16/5 3 minutes.

Stage 2: Reduce pressure at a uniform rate from 8 pounds to 4 pounds over a period of 4 minutes.

Rate, 1 pound per minute elapsed time, stage 2 ..... 4 minutes.

Transfer person to special decompression chamber maintaining the 4-pound pressure during the transfer operation.

Stage 3 (final stage): In the special decompression chamber, reduce the pressure at a uniform rate from 4 pounds to 0-pound gage over a period of 110 minutes. Rate, 0.037 pound per minute or 27.5 minutes per pound. Stage 3 (final) elapsed time . . . 110 minutes.

Total time ..... 117 minutes.

DECOMPRESSION TABLE NO. 1
TABLE DECOMPRESSION TIME

	Work pressure								Working period hours		
Over p.s.i.g.	1/2	1	1 1/2	2	3	4	5	6	7	8	8
0-12	3	3	3	3	3	3	3	3	3	3	3
14	6	6	6	6	6	6	6	6	16	16	33
16	7	7	7	7	7	7	17	33	48	48	62
18	7	7	7	8	11	17	48	63	63	73	87
20	7	7	8	15	15	43	63	73	83	103	113
22	9	9	16	24	38	68	93	103	113	128	133
24	11	12	23	27	52	92	117	122	127	137	151
26	13	14	29	34	69	104	126	141	142	142	163
28	15	23	31	41	98	127	143	153	153	165	183
30	17	28	38	62	105	143	165	168	178	188	204
32	19	35	43	85	126	163	178	193	203	213	226
34	21	39	58	98	151	178	195	218	223	233	248
36	24	44	63	113	170	198	223	233	243	253	273
38	28	49	73	128	178	203	223	238	253	263	278
40	31	49	84	143	183	213	233	248	258	278	288
42	37	56	102	144	189	215	245	260	263	268	293
44	43	64	118	154	199	234	254	264	269	269	293
46	44	74	139	171	214	244	269	274	289	299	318
48	51	89	144	189	229	269	299	309	319	319	...
50	58	94	164	209	249	279	309	329	...	...	...

DECOMPRESSION TABLE NO. 2

(Do not interpolate, use next higher value for conditions not computed.)

Working chamber pressure P.s.i.g.	Working period Hours	Stage No.	Pressure reduction P.s.i.g. From	To	Decompression data: Time in stage Minutes Min/Pound	Pressure reduction rate	Total time de-compress Minutes
14	1/2	1	14	4	2	0.20	6
		2	4	0	4	1.00	6
	1	1	14	4	2	0.20	6
		2	4	0	4	1.00	6
	1 1/2	1	14	4	2	0.20	6
		2	4	0	4	1.00	6
	2	1	14	4	2	0.20	6
		2	4	0	4	1.00	6
	3	1	14	4	2	0.20	6
		2	4	0	4	1.00	6
	4	1	14	0	2	0.20	6
		2	4	0	4	1.00	6
	5	1	14	4	2	0.20	6
		2	4	0	4	1.00	6
	6	1	14	4	2	0.20	
		2	4	0	4	1.00	6
	7	1	14	4	2	0.20	
		2	4	0	14	3.50	16
	8	1	14	4	2	0.20	
		2	4	0	14	3.50	16
	Over 8	1	14	4	2	0.20	
		2	4	0	30	7.50	32
16	1/2	1	16	4	3	0.20	
		2	4	0	4	1.00	7
	1	1	16	4	3	0.20	7
		2	4	0	4	1.00	7
	1 1/2	1	16	4	3	0.20	
		2	4	0	4	1.00	7
	2	1	16	4	3	0.20	
		2	4	0	4	1.00	7
	3	1	16	4	3	0.20	
		2	4	0	4	1.00	7
	4	1	14	4	3	0.20	
		2	4	0	4	1.00	7
	5	1	14	4		0.20	7
		2	4	0	4	3.50	17
	6	1	14	4	3	0.20	
		2	4	0	30	7.50	33

DECOMPRESSION TABLE NO. 2 (Cont.)

(Do not interpolate, use next higher value
for conditions not computed.)

				Decompression data				
Working chamber pressure P.s.i.g.	Working period Hours	Stage No.	Pressure reduction P.s.i.g. ---------- From	To	Time in stage Minutes Min/Pound	Pressure reduction rate	Total time de-compress Minutes
	7	1	14	4	3	0.20	
		2	4	0	45	11.25	48
	8	1	14	4	3	0.20	
		2	4	0	45	11.25	48
	Over 8	1	14	4	3	0.20	
		2	4	0	100	25.00	103
	Over 8	1	20	4	3	0.20	
		2	4	0	110	27.50	113
22	1/2	1	22	6	3	0.20	
		2	6	0	6	1.00	9
	1	1	22	6	3	0.20	
		2	6	0	6	1.00	9
	1 1/2	1	2	6	3	0.20	
		2	6	0	13	2.20	16
	2	1	22	6	3	0.20	
		2	6	0	21	3.50	24
	3	1	22	6	3	0.20	
		2	6	0	35	5.85	38
	4	1	22	6	3	0.20	
		2	6	0	65	10.83	68
	5	1	22	6	3	0.20	
		2	6	0	90	15.00	93
	6	1	22	6	3	0.20	
		2	6	0	100	16.67	103
	7	1	22	6	3	0.20	
		2	6	0	110	18.35	113
	8	1	22	6	3	0.20	
		2	6	0	125	20.80	128
	Over 8	1	22	6	3	0.20	
		2	6	0	130	21.70	133
24	1/2	1	24	8	3	0.20	
		2	8	4	4	1.00	
		3	4	0	4	1.00	11
	1	1	24	8	3	0.20	
		2	8	4	4	1.00	
		3	4	0	5	1.25	12
	1 1/2	1	2	8	3	0.20	
		2	8	4	4	1.00	

DECOMPRESSION TABLE NO. 2 (Cont.)

(Do not interpolate, use next higher value
for conditions not computed.)

					Decompression data		
Working chamber pressure P.s.i.g.	Working period Hours	Stage No.	Pressure reduction P.s.i.g. ---------- From	To	Time in stage Minutes Min/Pound	Pressure reduction rate	Total time de-compress Minutes
	2	1	24	8	3	0.20	
		2	8	4	4	1.00	
		3	4	0	20	5.00	27
		3	4	0	16	4.00	23
	3	1	24	8	3	0.20	
		2	8	4	4	1.00	
		3	4	0	45	11.25	52
	4	1	2	8	3	0.20	
		2	8	4	4	1.00	
		3	4	0	85	21.25	92
	5	1	2	8	3	0.20	
		2	8	4	4	1.00	
		3	4	0	110	27.50	117
	6	1	2	8	3	0.20	
		2	8	4	4	1.00	
		3	4	0	115	28.80	122
	7	1	24	8	3	0.20	
		2	8	4	4	1.00	
		3	4	0	120	30.00	127
	8	1	2	8	3	0.20	
		2	8	4	4	1.00	
		3	4	0	130	32.50	137
	Over 8	1	24	8	3	0.20	
		2	8	4	8	2.00	
		3	4	0	140	35.00	151
26	1/2	1	2	10	3	0.20	
		2	10	4	6	1.00	
		3	4	0	4	1.00	13
	1	1	2	10	3	0.20	
		2	10	4	6	1.00	
		3	4	0	5	1.25	14
	1 1/2	1	26	10	3	0.20	
		2	10	4	6	1.00	
		3	4	0	20	5.00	29
	2	1	2	10	3	0.20	
		2	10	4	6	1.00	
		3	4	0	25	6.25	34
	3	1	26	10	3	0.20	

DECOMPRESSION TABLE NO. 2 (Cont.)

(Do not interpolate, use next higher value
for conditions not computed.)

					Decompression data		
Working chamber pressure P.s.i.g.	Working period Hours	Stage No.	Pressure reduction P.s.i.g. ---------- From	To	Time in stage Minutes Min/Pound	Pressure reduction rate	Total time de-compress Minutes
		2	10	4	6	1.00	
		3	4	0	60	15.00	69
	4	1	26	10	3	0.20	
		2	10	4	6	1.00	
		3	4	0	95	23.75	104
	5	1	26	10	3	0.20	
		2	10	4	8	1.33	
		3	4	0	115	28.80	126
	6	1	26	10	3	0.20	
		2	10	4	8	1.33	
		3	4	0	130	32.50	141
	7	1	26	10	3	0.20	
		2	10	4	9	1.50	
		3	4	0	130	32.50	142
	8	1	26	10	3	0.20	
		2	10	4	9	1.50	
		3	4	0	130	32.50	142
	Over 8	1	26	10	3	0.20	
		2	10	4	30	5.00	
		3	4	0	130	32.50	163
28	1/2	1	28	12	3	0.20	
		2	12	4	8	1.00	
		3	4	0	4	1.00	15
	1	1	28	12	3	0.20	
		2	12	4	8	1.00	
		3	4	0	12	3.00	23
	1 1/2	1	28	12	3	0.20	
		2	12	4	8	1.00	
		3	4	0	20	5.00	31
	2	1	28	12	3	0.20	
		2	12	4	8	1.00	
		3	4	0	30	7.50	41
	3	1	28	12	3	0.20	
		2	12	4	10	1.25	
		3	4	0	85	21.20	98
	4	1	28	12	3	0.20	
		2	12	4	14	1.75	
		3	4	0	110	27.50	127

DECOMPRESSION TABLE NO. 2 (Cont.)

(Do not interpolate, use next higher value
for conditions not computed.)

					Decompression data		
Working chamber pressure P.s.i.g.	Working period Hours	Stage No.	Pressure reduction P.s.i.g. ---------- From	To	Time in stage Minutes Min/Pound	Pressure reduction rate	Total time de-compress Minutes
	5	1	28	12	3	0.20	
		2	12	4	20	2.50	
		3	4	0	120	30.00	143
	6	1	28	12	3	0.20	
		2	12	4	20	2.50	
		3	4	0	130	32.50	153
	7	1	28	12	3	0.20	
		2	12	4	20	2.50	
		3	4	0	130	32.50	153
	8	1	28	12	3	0.20	
		2	12	4	32	4.00	
		3	4	0	130	32.50	165
	Over 8	1	28	12	3	0.20	
		2	12	4	50	6.25	
		3	4	0	130	32.50	183
30	1/2	1	30	14	3	0.20	
		2	14	4	10	1.00	
		3	4	0	4	1.00	17
	1	1	30	14	3	0.20	
		2	14	4	10	1.00	
		3	4	0	15	3.75	28
	1 1/2	1	30	14	3	0.20	
		2	14	4	10	1.00	
		3	4	0	25	6.25	38
	2	1	30	14	3	0.20	
		2	14	4	14	1.40	
		3	4	0	45	11.25	62
	3	1	30	14	3	0.20	
		2	14	4	17	1.70	
		3	4	0	85	21.20	105
	4	1	30	14	3	0.20	
		2	14	4	30	3.00	
		3	4	0	110	27.50	143
	5	1	30	14	3	0.20	
		2	14	4	35	3.50	
		3	4	0	130	32.50	165
	6	1	30	14	3	0.20	
		2	14	4	35	3.50	

DECOMPRESSION TABLE NO. 2 (Cont.)

(Do not interpolate, use next higher value
for conditions not computed.)

					Decompression data		
Working chamber pressure P.s.i.g.	Working period Hours	Stage No.	Pressure reduction P.s.i.g. ---------- From	To	Time in stage Minutes Min/Pound	Pressure reduction rate	Total time de-compress Minutes
		3	4	0	130	32.50	168
	7	1	30	14	3	0.20	
		2	14	4	45	4.50	
		3	4	0	130	32.50	178
	8	1	30	14	3	0.20	
		2	14	4	55	5.50	
		3	4	0	130	32.50	188
	Over 8	1	30	14	3	0.20	
		2	14	4	71	7.10	
		3	4	0	130	32.50	204
32	1/2	1	32	16	3	0.20	
		2	16	4	12	1.00	
		3	4	0	4	1.00	19
	1	1	32	16	3	0.20	
		2	16	4	12	1.00	
		3	4	0	20	5.00	35
	1 1/2	1	32	16	3	0.20	
		2	16	4	15	1.25	
		3	4	0	25	6.25	43
	2	1	32	16	3	0.20	
		2	16	4	22	1.83	
		3	4	0	60	15.00	85
	3	1	32	16	3	0.20	
		2	16	4	28	2.33	
		3	4	0	95	23.75	126
	4	1	32	16	3	0.20	
		2	16	4	40	3.33	
		3	4	0	120	30.00	163
	5	1	32	16	3	0.20	
		2	16	4	45	3.75	
		3	4	0	130	32.50	178
	6	1	32	16	3	0.20	
		2	16	4	60	5.00	
		3	4	0	130	32.50	193
	7	1	32	16	3	0.20	
		2	16	4	70	5.83	
		3	4	0	130	32.50	203
	8	1	32	16	3	0.20	

DECOMPRESSION TABLE NO. 2 (Cont.)

(Do not interpolate, use next higher value
for conditions not computed.)

Working chamber pressure P.s.i.g.	Working period Hours	Stage No.	Decompression data: Pressure reduction P.s.i.g. From	To	Time in stage Minutes Min/Pound	Pressure reduction rate	Total time de-compress Minutes
		2	16	4	80	6.67	
		3	4	0	130	32.50	213
	Over 8	1	32	16	3	0.20	
		2	16	4	93	7.75	
		3	4	0	130	32.50	226
34	1/2	1	34	18	3	0.20	
		2	18	4	14	1.00	
		3	4	0	4	1.00	21
	1	1	34	18	3	0.20	
		2	18	4	14	1.00	
		3	4	0	22	5.50	39
	1 1/2	1	34	18	3	0.20	
		2	18	4	25	1.80	
		3	4	0	30	7.50	58
	2	1	34	18	3	0.20	
		2	18	4	35	2.50	
		3	4	0	60	15.00	98
	3	1	34	18	3	0.20	
		2	18	4	43	3.10	
		3	4	0	105	26.25	151
	4	1	34	18	3	0.20	
		2	18	4	55	3.93	
		3	4	0	120	30.00	178
	5	1	34	18	3	0.20	
		2	18	4	62	4.43	
		3	4	0	130	32.50	195
	6	1	34	18	3	0.20	
		2	18	4	85	6.07	
		3	4	0	130	32.50	218
	7	1	34	18	3	0.20	
		2	18	4	90	6.43	
		3	4	0	130	32.50	223
	8	1	34	18	3	0.20	
		2	18	4	100	7.15	
		3	4	0	30	32.50	233
	Over 8	1	34	18	3	0.20	
		2	18	4	115	8.23	
		3	4	0	130	32.50	248

DECOMPRESSION TABLE NO. 2 (Cont.)

(Do not interpolate, use next higher value
for conditions not computed.)

					Decompression data		
Working chamber pressure P.s.i.g.	Working period Hours	Stage No.	Pressure reduction P.s.i.g. ---------- From	To	Time in stage Minutes Min/Pound	Pressure reduction rate	Total time de-compress Minutes
36	1/2	1	36	20	3	0.20	
		2	20	4	16	1.00	
		3	4	0	5	1.25	24
	1	1	36	20	3	0.20	
		2	20	4	16	1.00	
		3	4	0	25	6.25	44
	1 1/2	1	36	20	3	0.20	
		2	20	4	30	1.88	
		3	4	0	30	7.50	63
	2	1	36	20	3	0.20	
		2	20	4	40	2.50	
		3	4	0	70	17.50	113
	3	1	36	20	3	0.20	
		2	20	4	52	3.25	
		3	4	0	115	28.75	170
	4	1	36	20	3	0.20	
		2	20	4	65	4.06	
		3	4	0	130	32.50	198
	5	1	36	20	3	0.20	
		2	20	4	90	5.63	
		3	4	0	130	2.50	223
	6	1	36	20	3	0.20	
		2	20	4	100	6.25	
		3	4	0	130	32.50	233
	7	1	36	20	3	0.20	
		2	20	4	110	6.88	
		3	4	0	130	32.50	243
	8	1	36	20	3	0.20	
		2	20	4	120	7.50	
		3	4	0	130	32.50	253
	Over 8	1	36	20	3	0.20	
		2	20	4	140	8.75	
		3	4	0	130	32.50	273
38	1/2	1	38	22	3	0.20	
		2	22	6	16	1.00	
		3	6	0	9	1.50	28
	1	1	38	22	3	0.20	
		2	22	6	16	1.00	

DECOMPRESSION TABLE NO. 2 (Cont.)

(Do not interpolate, use next higher value
for conditions not computed.)

					Decompression data		
Working chamber pressure P.s.i.g.	Working period Hours	Stage No.	Pressure reduction P.s.i.g. ---------- From	To	Time in stage Minutes Min/Pound	Pressure reduction rate	Total time de-compress Minutes
		3	6	0	30	5.00	49
	1 1/2	1	38	22	3	0.20	
		2	22	6	20	1.25	
		3	6	0	50	8.34	73
	2	1	38	22	3	0.20	
		2	22	6	30	1.88	
		3	6	0	95	15.83	128
	3	1	38	22	3	0.20	
		2	22	6	35	2.19	
		3	6	0	140	23.35	178
	4	1	38	22	3	0.20	
		2	22	6	50	3.12	
		3	6	0	150	25.00	203
	5	1	38	22	3	0.20	
		2	22	6	55	3.44	
		3	6	0	165	27.50	223
	6	1	28	22	3	0.20	
		2	22	6	70	4.38	
		3	6	0	165	27.50	238
	7	1	38	22	3	0.20	
		2	22	6	85	5.32	
		3	6	0	165	27.50	253
	8	1	38	22	3	0.20	
		2	22	6	95	5.93	
		3	6	0	165	27.50	263
	Over 8	1	38	22	3	0.20	
		2	22	6	110	6.88	
		3	6	0	165	27.50	278
40	1/2	1	40	24	3	0.20	
		2	24	8	16	1.00	
		3	8	4	4	1.00	
		4	4	0	8	2.00	31
	1	1	40	24	3	0.20	
		2	24	8	16	1.00	
		3	8	4	5	1.25	
		4	4	0	25	6.25	49
	1 1/2	1	40	24	3	0.20	
		2	24	8	16	1.00	

DECOMPRESSION TABLE NO. 2 (Cont.)

(Do not interpolate, use next higher value
for conditions not computed.)

					Decompression data		
Working chamber pressure P.s.i.g.	Working period Hours	Stage No.	Pressure reduction P.s.i.g. ---------- From	To	Time in stage Minutes Min/Pound	Pressure reduction rate	Total time de-compress Minutes
		3	8	4	20	5.00	
		4	4	0	45	11.25	84
	2	1	40	24	3	0.20	
		2	24	8	25	1.56	
		3	8	4	20	5.00	
		4	4	0	95	23.75	143
	3	1	40	24	3	0.20	
		2	24	8	30	1.88	
		3	8	4	30	7.50	
		4	4	0	120	30.00	183
	4	1	40	24	3	0.20	
		2	24	8	45	2.81	
		3	8	4	35	8.75	
		4	4	0	130	32.50	213
	5	1	40	24	3	0.20	
		2	24	8	47	2.94	
		3	8	4	53	13.25	
		4	4	0	130	32.50	233
	6	1	40	24	3	0.20	
		2	24	8	55	3.44	
		3	8	4	60	5.00	
		4	4	0	130	32.50	248
	7	1	40	24	3	0.20	
		2	24	8	65	4.06	
		3	8	4	60	15.00	
		4	4	0	130	32.50	258
	8	1	40	24	3	0.20	
		2	24	8	75	4.70	
		3	8	4	60	15.00	
		4	4	0	130	32.50	268
	Over 8	1	40	24	3	0.20	
		2	24	8	95	5.93	
		3	8	4	60	15.00	
		4	4	0	130	32.50	288
42	1/2	1	42	26	3	0.20	
		2	26	10	16	1.00	
		3	10	4	6	1.00	
		4	4	0	12	3.00	37

DECOMPRESSION TABLE NO. 2 (Cont.)

(Do not interpolate, use next higher value
for conditions not computed.)

Working chamber pressure P.s.i.g.	Working period Hours	Stage No.	Decompression data: Pressure reduction P.s.i.g. From	To	Time in stage Minutes Min/Pound	Pressure reduction rate	Total time de-compress Minutes
	1	1	42	26	3	0.20	
		2	26	10	16	1.00	
		3	10	4	12	2.00	
		4	4	0	25	6.25	56
	1 1/2	1	42	26	3	0.20	
		2	26	10	16	1.00	
		3	10	4	23	3.83	
		4	4	0	60	15.00	102
	2	1	42	26	3	0.20	
		2	26	10	16	1.00	
		3	10	4	30	5.00	
		4	4	0	95	23.75	144
	3	1	42	26	3	0.20	
		2	26	10	16	1.00	
		3	10	4	50	8.34	
		4	4	0	120	30.00	189
	4	1	42	26	3	0.20	
		2	26	10	17	1.06	
		3	10	4	65	10.83	
		4	4	0	130	32.50	215
	5	1	42	26	3	0.20	
		2	26	10	27	1.69	
		3	10	4	85	14.18	
		4	4	0	130	32.50	245
	6	1	42	26	3	0.20	
		2	26	10	27	1.69	
		3	10	4	100	16.67	
		4	4	0	130	32.50	260
	7	1	42	26	3	0.20	
		2	26	10	30	1.88	
		3	10	4	100	16.67	
		4	4	0	130	32.50	263
	8	1	42	26	3	0.20	
		2	26	10	35	2.19	
		3	10	4	100	16.67	
		4	4	0	130	32.50	268
	Over 8	1	42	26	3	0.20	
		2	26	10	60	3.75	

DECOMPRESSION TABLE NO. 2 (Cont.)

(Do not interpolate, use next higher value
for conditions not computed.)

					Decompression data		
Working chamber pressure P.s.i.g.	Working period Hours	Stage No.	Pressure reduction P.s.i.g. ---------- From	To	Time in stage Minutes Min/Pound	Pressure reduction rate	Total time de-compress Minutes
		3	10	4	100	16.67	
		4	4	0	130	32.50	293
44	1/2	1	44	28	3	0.20	
		2	28	12	16	1.00	
		3	12	4	8	1.00	
		4	4	0	16	4.00	43
	1	1	44	28	3	0.20	
		2	28	12	16	1.00	
		3	12	4	20	2.50	
		4	4	0	25	6.25	64
	1 1/2	1	44	28	3	0.20	
		2	28	12	16	1.00	
		3	12	4	27	3.38	
		4	4	0	72	18.00	118
	2	1	44	28	3	0.20	
		2	28	12	16	1.00	
		3	12	4	40	5.00	
		4	4	0	95	23.75	154
	3	1	44	28	3	0.20	
		2	28	12	16	1.00	
		3	12	4	60	7.50	
		4	4	0	120	30.00	199
	4	1	44	28	3	0.20	
		2	28	12	16	1.00	
		3	12	4	85	10.62	
		4	4	0	130	32.50	234
	5	1	44	28	3	0.20	
		2	28	12	16	1.00	
		3	12	4	105	13.13	
		4	4	0	130	32.50	254
	6	1	44	28	3	0.20	
		2	28	12	16	1.00	
		3	12	4	115	14.38	
		4	4	0	130	32.50	264
	7	1	44	28	3	0.20	
		2	28	12	16	1.00	
		3	12	4	120	15.00	
		4	4	0	130	32.50	269

DECOMPRESSION TABLE NO. 2 (Cont.)

(Do not interpolate, use next higher value
for conditions not computed.)

Working chamber pressure P.s.i.g.	Working period Hours	Stage No.	Decompression data: Pressure reduction P.s.i.g. From	To	Time in stage Minutes Min/Pound	Pressure reduction rate	Total time de-compress Minutes
	8	1	44	28	3	0.20	
		2	28	12	16	1.00	
		3	12	4	120	15.00	
		4	4	0	130	32.50	269
	Over 8	1	44	28	3	0.20	
		2	28	12	40	2.50	
		3	12	4	120	15.00	
		4	4	0	130	32.50	293
46	1/2	1	46	30	3	0.20	
		2	30	14	16	1.00	
		3	14	4	10	1.00	
		4	4	0	15	3.75	44
	1	1	46	30	3	0.20	
		2	30	14	16	1.00	
		3	14	4	25	2.50	
		4	4	0	30	7.50	74
	1 1/2	1	46	30	3	0.20	
		2	30	14	16	1.00	
		3	14	4	35	3.50	
		4	4	0	85	21.20	139
	2	1	46	30	3	0.20	
		2	30	14	16	1.00	
		3	14	4	47	4.70	
		4	4	0	105	26.25	171
	3	1	46	30	3	0.20	
		2	30	14	16	1.00	
		3	14	4	65	6.50	
		4	4	0	130	32.50	214
	4	1	46	30	3	0.20	
		2	30	14	16	1.00	
		3	14	4	95	9.50	
		4	4	0	130	32.50	244
	5	1	46	30	3	0.20	
		2	30	14	16	1.00	
		3	14	4	120	12.00	
		4	4	0	130	32.50	269
	6	1	46	30	3	0.20	
		2	30	14	16	1.00	

DECOMPRESSION TABLE NO. 2 (Cont.)

(Do not interpolate, use next higher value
for conditions not computed.)

					Decompression data		
Working chamber pressure P.s.i.g.	Working period Hours	Stage No.	Pressure reduction P.s.i.g. ---------- From	To	Time in stage Minutes Min/Pound	Pressure reduction rate	Total time de-compress Minutes
		3	14	4	125	12.50	
		4	4	0	130	32.50	274
	7	1	46	30	3	0.20	
		2	30	14	16	1.00	
		3	14	4	140	14.00	
		4	4	0	130	32.50	289
	8	1	46	30	3	0.20	
		2	30	14	16	1.00	
		3	14	4	150	15.00	
		4	4	0	130	32.50	299
	Over 8	1	46	30	3	0.20	
`		2	30	14	25	1.56	
		3	14	4	160	16.00	
		4	4	0	130	32.50	318
48	1/2	1	48	32	3	0.20	
		2	32	16	16	1.00	
		3	16	4	12	1.00	
		4	4	0	20	5.00	51
	1	1	48	32	3	0.20	
		2	32	16	16	1.00	
		3	16	4	35	2.92	
		4	4	0	35	8.75	89
	1 1/2	1	48	32	3	0.20	
		2	32	16	16	1.00	
		3	16	4	45	3.75	
		4	4	0	80	20.00	144
	2	1	48	32	3	0.20	
		2	32	16	16	1.00	
		3	16	4	60	5.00	
		4	4	0	110	27.50	189
	3	1	48	32	3	0.20	
		2	32	16	16	1.00	
		3	16	4	90	7.50	
		4	4	0	120	30.00	229
	4	1	48	32	3	0.20	
		2	32	16	16	1.00	
		3	16	4	120	10.00	
		4	4	0	130	32.50	269

DECOMPRESSION TABLE NO. 2 (Cont.)

(Do not interpolate, use next higher value
for conditions not computed.)

					Decompression data		
Working chamber pressure P.s.i.g.	Working period Hours	Stage No.	Pressure reduction P.s.i.g. ---------- From	To	Time in stage Minutes Min/Pound	Pressure reduction rate	Total time de-compress Minutes
	5	1	48	32	3	0.20	
		2	32	16	16	1.00	
		3	16	4	140	11.67	
		4	4	0	130	32.50	299
	6	1	48	32	3	0.20	
		2	32	16	16	1.00	
		3	16	4	160	13.33	
		4	4	0	130	32.50	309
	7	1	48	32	3	0.20	
		2	32	16	16	1.00	
		3	16	4	170	14.17	
		4	4	0	130	32.50	319
	8	1	48	32	3	0.20	
		2	32	16	16	1.00	
		3	16	4	170	14.17	
		4	4	0	130	32.50	319
50	1/2	1	50	34	3	0.20	
		2	34	18	16	1.00	
		3	18	4	14	1.00	
		4	4	0	25	6.25	58
	1	1	50	34	3	0.20	
		2	34	18	16	1.00	
		3	18	4	40	2.86	
		4	4	0	35	8.75	94
	1 1/2	1	50	34	3	0.20	
		2	34	18	16	1.00	
		3	18	4	55	3.93	
		4	4	0	90	22.50	164
	2	1	50	34	3	0.20	
		2	34	18	16	1.00	
		3	18	4	70	5.00	
		4	4	0	120	30.00	209
	3	1	50	34	3	0.20	
		2	34	18	16	1.00	
		3	18	4	100	7.15	
		4	4	0	130	32.50	249
	4	1	50	34	3	0.20	

DECOMPRESSION TABLE NO. 2 (Cont.)

(Do not interpolate, use next higher value
for conditions not computed.)

			Decompression data				
Working chamber pressure P.s.i.g.	Working period Hours	Stage No.	Pressure reduction P.s.i.g. ---------- From	To	Time in stage Minutes Min/Pound	Pressure reduction rate	Total time de-compress Minutes
		2	34	18	16	1.00	
		3	18	4	130	8.58	
		4	4	0	130	32.50	279
	5	1	50	34	3	0.20	
		2	34	18	16	1.00	
		3	18	4	160	11.42	
		4	4	0	130	32.50	309
	6	1	50	34	3	0.20	
		2	34	18	16	1.00	
		3	18	4	180	12.85	
		4	4	0	130	32.50	329

[Statutory Authority: Chapter 49.17 RCW. 94-15-096 (Order 94-07), § 296-155-74501, filed 7/20/94, effective 9/20/94; Order 74-26, § 296-155-745 (part), Appendix A (codified as WAC 296-155-74501), filed 5/7/74, effective 6/6/74.]

PART R
MISCELLANEOUS CONSTRUCTION REQUIREMENTS

LAST UPDATED: 05/20/2016

WAC 296-155-755 Roofing, insulating and waterproofing..... 1

WAC 296-155-765 Rock crushing, gravel washing, and hot mix plants..... 2

WAC 296-155-770 Moving of structures..... 3

WAC 296-155-77100 Hoists, elevators, excavators, and conveyors. 5

WAC 296-155-77105 Material hoists, personnel hoists, and elevators..... 9

WAC 296-155-77110 Base-mounted drum hoists. 13

WAC 296-155-77115 Overhead hoists. 14

WAC 296-155-77120 Conveyors. 14

WAC 296-155-77125 Aerial cableways. 16

WAC 296-155-77130 Concrete bucket towers..... 17

WAC 296-155-77135 Hoisting engines..... 18

WAC 296-155-755 Roofing, insulating and waterproofing.

(1) Roofers hoisting jack must be constructed to withstand the contemplated load to be hoisted. The beam from counter balance point to heel of jack must be at least 3/4 the length of the entire beam.

(2) You must counterweight hoisting jack with a minimum of 3 times the contemplated maximum load to be lifted. You must securely fasten counterweight to heel of jack to prevent displacement, or you must fasten the jack by means of lashing, bolting, or other means to prevent displacement.

(3) You must provide a steel collar or U-bolt and shackle on head of the hoisting jack for attachment of pulley.

(4) Hoisting pulleys must be of steel construction.

(5) Where materials are hoisted by hand the hoist line must be not less than 5/8 manila rope, or the equivalent. Where machine hoist is used the hoist line must be wire rope.

(6) Hoisting hooks must be of cast or forged steel heavy enough to prevent straightening under a load.

(7) Workers must not stand under load when material or hot asphalt is being hoisted.

(8) You must keep hot asphalt at a safe level in buckets for carrying and hoisting.

(9) Workers must not carry service buckets of hot asphalt up ladders.

(10) Service buckets must be standard safety bucket or flatbottom bucket with bails fastened to an offset ear firmly riveted to side of bucket. There must be a handle riveted near bottom of bucket for tipping purposes.

(11) Ladders must extend at least 3 feet above the platform or roof served and must be secured at top and bottom to prevent slipping.

(12) You must erect safeguards to prevent loads and lines contacting power lines where not possible to work in clear of power lines.

(13) You must not throw asphalt chunks into hot tar pot, but you must place it placed so as to prevent splashing of hot material.

(14) There must be means to smother fires at fired tar pots.

(15) Mop or spud bar handles over 3 feet long must be of wood or other nonconductive material.

(16) Persons working at kettles or handling hot tar must, wear gloves and have arms fully protected.

(17) You must keep open tar heating pots outside of buildings.

> *Note: Electric type tar heating equipment may be used inside of the working enclosure provided that exhaust fans in connection with tubing, either rigid or flexible, capable of carrying fumes created by the heating process to the outside air are installed and in constant use during heating operations. The equipment should be provided with hinged lid or baffle plate for the purpose of immediate smothering of a pot fire.*

(18) While hot tar is being applied inside an enclosure, you must install exhaust fans to supplement natural ventilation to expedite removal of gaseous fumes from the building.

(19) Flame heated tar pots are prohibited on roofs of structures.

(20) Tar pots must have an attendant at all times while in operation.

[Statutory Authority: RCW 49.17.010, .040, .050, and .060. 16-09-085 (Order 15-08), § 296-155-755, filed 04/19/16, effective, 05/20/16. Order 74-26, § 296-155-755, filed 5/7/74, effective 6/6/74.]

WAC 296-155-765 Rock crushing, gravel washing, and hot mix plants.

(1) Stationary dragline machines must have all moving parts which are exposed to contact guarded with standard safeguards.

   (a) You must inspect all running lines, straps, etc., and they must be changed when 10% of the wires in a 3 foot length are broken.

   (b) Spars must be properly guyed with a minimum of 5 top guys and where spar is over 50 feet in height, you must use 3 buckle guys

   (c) You must rig a pass line on the spar to provide safe means of reaching top of spar.

   (d) The head block must be equipped with a safety strap attached to shell of the block and onto a guy wire leading away from the working area.

(2) Truck dump bunkers must have wheel bumper block installed when dumping material from trucks.

(3) You must install substantial walkways and working platforms, equipped with toe boards and handrails at all plants. You must place standard stairways and ladders to reach all parts requiring oiling and maintenance.

(4) Plant structures must be constructed to carry the required load, without material or structural failure, for the prescribed life of the material used.

(5) Bunker unloading devices must be arranged to be operative from outside the walls of bunkers.

(6) Crusher operators and other employees working where hazardous dust or nuisance dust exists must use approved respirators and goggles.

(7) All dusty rock crushing houses or other dusty places of employment, must be equipped with means for controlling the dust.

(8) Cone type crushers must be equipped with approved guards over or around the feed end to prevent rock from flying from crusher while in operation.

(9) All aggregate elevators, bucket or other type, must have guards or barricades installed under or around return strand and of sufficient strength to sustain weight of piled up broken elevator equipment.

(10) All plant controls must be placed so as to be readily accessible.

(11) Overhead conveyors must be constructed so as to restrain the spillage of material. Wherever the hazard of falling materials exists, you must provide overhead protection over walkways and roadways.

(12) Electrical equipment must be installed and maintained to comply with the National Electrical Code.

(13) You must discharge exhaust fumes from internal combustion engines away from or above the working station.

(14) Hot mix plants, steam boilers and pressure vessels must conform to A.S.M.E. Boiler and Pressure Vessel Codes and applicable rules and regulations of the department.

(15) All hot pipes exposed to contact must be covered or otherwise guarded against contact.

(16) All oil tanks above ground must be properly bedded and grounded.

(17) You must clean up or cover oil leakage on the ground with absorbent material.

(18) Mixer operators must use approved respirator and goggles except when operating from a remote location.

(19) You must provide dust and fume collection systems on all installations. You must discharge dust and fumes back into plant or carried to a suitable distance from the work area and precipitated.

[Statutory Authority: RCW 49.17.010, .040, .050, and .060. 16-09-085 (Order 15-08), § 296-155-765, filed 04/19/16, effective, 05/20/16. Statutory Authority: RCW 49.17.040 and 49.17.050. 86-03-074 (Order 86-14), § 296-155-765, filed 1/21/86; Order 74-26, § 296-155-765, filed 5/7/74, effective 6/6/74.]

WAC 296-155-770 Moving of structures.

(1) When structures are being raised, lowered, temporarily held in position or moved laterally, you must exercise care to prevent the possibility of mishap.

(2) You must carefully compute weights to be moved and furnish equipment to provide a safety factor of 5.

(3) Where excavations exist you must shore them in compliance with Part N of this chapter.

(4) Cribbing and blocking must be set on a level and firm foundation.

(5) Dollies and rollers must be securely blocked except when structure is being moved by power equipment.

(6) Jacks must comply with WAC 296-155-375 of this chapter.

(7) You must make provisions to maintain a minimum clearance of 10 feet from all electrical conductors with the following exceptions:

(a) When a representative of the owner of the electrical conductors is present and directs the handling of all said conductors.

(b) Where there must be existing and/or erected mechanical barriers to prevent contact of structure or workers with said electrical conductors. Barriers must be installed by or under the direction of the owners of the conductors.

(c) Where said electrical conductors have been deenergized and grounded by the owners of the conductors.

(d) By relocation of said electrical conductors by the owners of the conductors. The 10 foot requirement must not be reduced by movement due to strains being imposed upon the conductors or the structures supporting the conductors or upon any fixtures or attachments thereon.

(8) When a structure is being lifted, shoring must be provided at all times and be kept up to the object until the desired height is reached, and then it must be blocked or cribbed immediately.

(9) Timbers must be in sound condition and of a size sufficient to maintain not more than one inch deflection for each 200 inches of unsupported span.

(10) The cross member used on the front dolly, or the fifth wheel on the truck, must be of construction and size to preclude any deflection. All floor joists of the building being moved must be firmly supported on either the running members or on the cross members, which in turn ride on or are firmly attached to the running members.

(11) When timbers are used as the cross member, you must use a steel saddle or cradle which will distribute the load evenly over the cross members, which in turn ride on or are firmly attached to the running members.

(12) When timbers are used as the cross member, you must use a steel saddle or cradle which will distribute the load evenly over the cross sectional area of said timber where the timber is supported over the dolly or fifth wheel. This saddle or cradle must be equipped so as to be interchangeable on any standard fifth wheel when such operation is used. Cross members of any other material used on fifth wheel loading must also be so equipped.

(13) When running members are secured to the lower side of the cross member supported by the fifth wheel or front dolly, the primary support must be 3/4 inch steel bolts placed one on either side of each member and spaced from such members by 1/2 inch steel plate shaped to act as a template for placement on the top of the cross member and beneath the running member. You must use 3/4 by 3 inch nuts to tighten the above described clamp in a secure fashion. You must use a secondary binding of chain or cable with chain binder or jacks to securely fasten the running members to cross members.

Note: Chains or cables securely tightened can be used. A secondary chain or safety chain should also be used in the event that the main chain should snap.

(14) You must use safety chains between the running members and the towing truck to supplant the tow bar, and will be secured so as to preclude any possibility of the running timbers being pulled off the cross members on the truck or from the dollies.

(15) For the purpose of computing weights to determine the axle and tire loadings, you must use the cubic volume of the building (length, width and height), including walls, floors and ceiling joists, allowing 5 pounds per cubic foot. You must use this method of computing weight to determine if larger equipment need be employed on any given move.

(16) When fastening structures to tractor, and runners are clamped to headers, you must use steel chains or the equivalent. If steel chains are used, you must tighten said chains by railroad jacks or the equivalent.

(17) All motor vehicles must conform with motor vehicle laws of the state of Washington.

(18) A fifth wheel type suspension with two nonsteering dollies must be acceptable for moving buildings which do not exceed 46 feet in length. You must obtain permission to move larger structures with this type of suspension from the department.

(19) Pushing from the rear is prohibited unless a system of signals is used to control the driver.

(20) You must carry blocks capable of holding the unit being moved, and in case of winching operations, you must keep them close to the downhill side of the wheel of each dolly to prevent a runaway should the cable slip.

[Statutory Authority: RCW 49.17.010, .040, .050, and .060. 16-09-085 (Order 15-08), § 296-155-770, filed 04/19/16, effective, 05/20/16. Order 74-26, § 296-155-770, filed 5/7/74, effective 6/6/74.]

WAC 296-155-77100 Hoists, elevators, excavators, and conveyors.

(1) **Definitions applicable to this section.**

Accessory. A secondary part or assembly of parts which contributes to the overall function and usefulness of a machine.

Appointed. Assigned specific responsibilities by the employer or the employer's representative.

Authorized person. A person approved or assigned by the employer to perform a specific type of duty or duties or be at a specific location or locations at the workplace.

Auxiliary hoist. A secondary hoist rope system used either in conjunction with, or independently of, the main hoist system.

Axle. The shaft or spindle with which or about which a wheel rotates. On wheel-mounted cranes it refers to a type of axle assembly including housings, gearing, differential, bearings, and mounting appurtenances.

Brake. A device used for retarding or stopping motion.

Clutch. A means for engagement or disengagement of power.

Commercial truck vehicle. A commercial motor vehicle designed primarily for the transportation of property in connection with business and industry.

Designated. Selected or assigned by the employer or the employer's representative as being competent to perform specific duties.

Job site Work area defined by the construction contract.

Limiting device. A mechanical device which is operated by some part of a power driven machine or equipment to control loads or motions of the machine or equipment.

Payload. That load or loads being transported by the commercial truck chassis from place to place.

Qualified person. A person who, by possession of a recognized degree or certificate of professional standing, or who, by extensive knowledge, training, and experience, has successfully demonstrated the ability to solve or resolve problems relating to the subject matter and work.

(2) **General requirements.**

(a) You must conspicuously post rated load capacities, and recommended operating speeds, and special hazard warnings, or instruction, on all equipment. Instructions or warnings must be visible to the operator while at the control station.

(b) The operator must avoid carrying loads over people.

(c) Operators must observe signals only from duly authorized persons. Under no circumstances must you move a load until the signal is received from authorized personnel.

(d) You must guard belts, gears, shafts, pulleys, sprockets, spindles, drums, fly wheels, chains, or other reciprocating, rotating, or other moving parts or equipment if such parts are exposed to contact by employees, or otherwise create a hazard. Guarding must meet the requirements of chapter 296-806 WAC, Machine safety.

(e) You must guard or insulate all exhaust pipes or insulated where contact by employees, in the performance of normal duties, is possible.

(f) Whenever internal combustion engine powered equipment exhaust in enclosed spaces, you must perform and record tests to see that employees are not exposed to unsafe concentrations of toxic gases or oxygen deficient atmospheres. (See chapter 296-62 WAC, the general occupational health standards and chapter 296-841 WAC, identifying and controlling respiratory hazards.

(g) Fuel tank filler pipe must be located in such a position, or protected in such a manner, as to not allow spill or overflow to run onto the engine, exhaust, or electrical equipment of any machine being fueled.

(i) An accessible fire extinguisher of 5BC rating, or higher, must be available at all operator stations or cabs of equipment.

Note: For additional requirements relating to portable fire extinguishers see WAC 296-800-300.

(ii) You must transport, store and handle all fuels to meet the rules of Part D of this chapter. When fuel is transported by vehicles on public highways, department of transportation rules concerning such vehicular transportation are considered applicable.

(h) Except where electrical distribution and transmission lines have been deenergized and visibly grounded at point of work or where insulating barriers, not a part of or an attachment to the equipment or machinery, have been erected to prevent physical contact with the lines, you must operate equipment or machines proximate to power lines only in accordance with following:

(i) For lines rated 50kV. or below, minimum clearance between the lines and any part of the equipment or load must be 10 feet.

(ii) For line rated over 50 kV., minimum clearance between the lines and any part of the equipment or load must be 10 feet plus 4/10 inch for each 1 kV. over 50 kV., or twice the length of the line insulator, but never less than 10 feet.

(iii) In transit with no load and boom lowered, the equipment clearance must be a minimum of 4 feet for voltages less than 50 kV., and 10 feet for voltages over 50 kV. up to and including 345kV., and 16 feet for voltages up to and including 750 kV.

(iv) You must designate a person to observe clearance of the equipment and give timely warning to ensure that the required separation is maintained for all operators where it is difficult for the operator to maintain the desired clearance by visual means.

(v) You must consider any overhead wire to be an energized line unless and until the person owning such line or the electrical utility authorities indicate that it is not an energized line and it has been visibly grounded.

(vi) Prior to work near transmitter tower where an electrical charge can be induced in the equipment or materials being handled, you must deenergize the transmitter or perform tests to determine if electrical charge is induced on the machine.

(i) Reserved.

(j) You must take the following precautions when necessary to dissipate induced voltage:

(i) The equipment must be provided with an electrical ground directly to the upper rotating structure supporting the boom; and

(ii) You must attach ground jumper cables to materials being handled by boom equipment when electrical charge is induced while working near energized transmitters. You must provide crews with nonconductive poles having large alligator clips or other similar protection to attach the ground cable to the load.

(k) You must not make any modifications or additions which affect the capacity or safe operation of the equipment without the manufacturer's or a qualified engineer's written approval. If such modification or changes are made, you must change the capacity, operation, and maintenance instruction plates, tags, or decals, accordingly. In no case must the original safety factor of the equipment be reduced.

(3) **Excavation machines.**

(a) In all power driven shovel operations the person in charge must issue instructions necessary to prevent accidents, to detect and correct unsafe acts and dangerous conditions, and to enforce all safety rules and regulations. The person in charge must also issue instructions on the proper method of using tools and handling material.

(b) Where the ground is soft or uneven, you must use timbering and planking to provide firm foundation and distribute the load.

(c) In case of a breakdown, you must move the shovel away from the foot of the slope before repairs are made.

(d) All persons must keep away from the range of the shovel's swing and must not be permitted to stand back of the shovel or in line with the swing of the dipper during operation or moving of shovel.

(e) You must not allow unauthorized persons on the shovel during operations, and the operator must not converse with other persons while operating machine.

(f) The shovel dipper must rest on the ground or on blocking during shut down periods.

(g) You must inspect shovels daily and all defects promptly repaired.

(h) You must perform oiling and greasing under safe conditions with machine at rest, except when motion of machine is necessary.

(i) All steps, running boards, and boom ladder must be of substantial construction and in good repair at all times.

(j) Operators must not leave the cab while master clutch is engaged.

(k) Fire extinguishers must be readily accessible and within reach of operator at all times.

(l) You must keep all shovel cabs clean and free of excess oil and grease on floor and machinery. You must dispose of oily and greasy rags immediately after use and not allowed to accumulate.

(m) You must leave tools on the cab floor. You must not store spare cans of oil or fuel, and spare parts, in cabs, except in approved racks provided for that purpose.

(n) You must use mats or planking in moving shovels over soft or uneven ground.

(o) You must securely block shovels setting on steep grades or secure them with a tail hold.

(p) You must prohibit smoking while fueling or oiling machines.

(q) You must stop gasoline powered motors during refueling.

(r) You must accomplish handling of movable feed line (bologna) with insulated hooks and lineman's rubber gloves.

(s) Where cables cross roads you must elevate or place them in a trench.

(t) On all power shovels, including back-hoe types, of 1/2 cubic yard capacity or over, two persons constitute the minimum working crew. It is mandatory that one be a qualified operator of the equipment in use. The job title of the other crew member may be oiler, rigger, signal person, or a laborer. The primary purpose of the second crew member is to signal the operator when the operator's vision is impaired or obscured and to be on-hand in case of an emergency.

(i) You must properly train second-crew persons in their second-person required skills.

(ii) The second crew member must be close enough to the machine in operation to be aware of any emergency, if one arises, and to assure the machine is operated with necessary and appropriate signals to the operator.

[Statutory Authority: RCW 49.17.010, .040, .050, and .060. 16-09-085 (Order 15-08), § 296-155-77100, filed 04/19/16, effective, 05/20/16. Statutory Authority: RCWs 47.17.010, 49.17.040, 49.17.050, 49.17.440 and 49.17.060. 12-01-086 (Order 08-32), § 296-155-77100, filed 12/20/11, effective 02/01/12.]

WAC 296-155-77105 Material hoists, personnel hoists, and elevators.

(1) **General requirements.**

(a) The employer must comply with the manufacturer's specifications and limitations applicable to the operation of all hoists and elevators. Where the manufacturer's specifications are not available, the limitations assigned to the equipment must be based on the determinations of a professional engineer competent in the field.

(b) The employer must ensure that no person must enter a hoistway, elevator shaft, or similar enclosure in which the hoisting apparatus or vehicle is installed and functioning unless the power source operating those systems is locked out in accordance with WAC 296-155-429.

(c) Rated load capacities, recommended operating speeds, and special hazard warning or instructions must be posted on cars and platforms.

(d) Wire rope must be removed from service when any of the following conditions exists:

(i) In hoisting ropes, 6 randomly distributed broken wires in one rope lay or 3 broken wires in one strand in one rope lay;

(ii) Abrasion, scrubbing, flattening, or peening, causing loss of more than one-third of the original diameter of the outside wires;

(iii) Evidence of any heat damage resulting from a torch or any damage caused by contact with electrical wires.

(iv) Reduction from nominal diameter of more than 3/64 inch for diameters up to and including 3/4 inch; 1/16 inch for diameters 7/8 to 1 1/8 inches; and 3/32 inch for diameters 1 1/4 to 1/1/2 inch.

(e) Hoisting ropes must be installed in accordance with the wire rope manufacturer's recommendations.

(f) The installation of live booms on hoists is prohibited.

(g) The use of endless belt-type man lifts on construction must be prohibited.

(h) Employees must not be permitted to ride on top of material hoists, personnel hoists or permanent elevators except for purposes of inspection, maintenance, elevator installation or dismantling work.

(2) **Material hoists.**

(a)

(i) Operating rules must be established and posted at the operator's station of the hoist. Such rules must include signal system and allowable line speed for various loads. Rules and notices must be posted on the car frame or crosshead in a conspicuous location, including the statement "No riders allowed".

(ii) No person must be allowed to ride on material hoists except for the purposes of inspection and maintenance.

(b) All entrances of the hoistways must be protected by substantial gates or bars which must guard the full width of the landing entrance. All hoistway entrance bars and gates must be painted with diagonal contrasting colors, such as black and yellow stripes.

(i) Bars must be not less than 2- by 4-inch wooden bars or the equivalent, located two feet from the hoistway line. Bars must be located not less than 36 inches nor more than 42 inches above the floor.

(ii) Gates or bars protecting the entrances to hoistway must be equipped with a latching device.

(c) Overhead protective covering of two-inch planking, 3/4 inch plywood or other solid material of equivalent strength must be provided on the top of every material hoist cage or platform to prevent objects falling on the workers loading or unloading the hoist.

(i) The protective covering on the top of the cage or platform may be made in hinged sections that may be raised when hoisting long material.

(ii) When using a cage or platform for long material, the several pieces of the material must be securely fastened together and made fast to the cage or platform, so that no part of the load can fall or project beyond the sides of the cage or platform.

(d) The operator's station of a hoisting machine must be provided with overhead protection equivalent to tight planking not less than two inches thick. The support for the overhead protection must be of equal strength.

(e) Hoist towers may be used with or without an enclosure on all sides. However, whichever alternative is chosen, the following applicable conditions must be met:

(i) When a hoist tower is enclosed, it must be enclosed on all sides for its entire height with a screen enclosure of 1/2 inch mesh, No. 18 U.S. gauge wire or equivalent, except for landing access.

(ii) When a hoist tower is not enclosed, the hoist platform or car must be totally enclosed (caged) on all sides for the full height between the floor and the overhead protective covering with 1/2 inch mesh No. 14 U.S. gauge wire or equivalent. The hoist platform enclosure must include the required gates for loading and unloading. A 6-foot high enclosure must be provided on the unused sides of the hoist tower at ground level.

(f) Car arresting devices must be installed to function in case of rope failure.

(g) All material hoist towers must be designed by a licensed professional engineer.

(h) All material hoists must conform to the requirements of ANSI A10.5-1969, Safety Requirements for Material Hoists.

(3) **Personnel hoists.**

(a) Personnel hoists must be provided for access and egress on all multi story buildings where vertical travel exceeds 60 feet from a ground level access point.

(b) Hoist towers outside the structure must be enclosed for the full height on the side or sides used for entrance and exit to the structure. At the lowest landing, the enclosure on the sides not used for exit or entrance to the structure must be enclosed to a height of at least 10 feet. Other sides of the tower adjacent to floors or scaffold platforms must be enclosed to a height of 10 feet above the level of such floors or scaffolds.

(c) Towers inside of structures must be enclosed on all 4 sides throughout the full height.

(d) Towers must be anchored to the structure at intervals not exceeding 30 feet. In addition to tie-ins, a series of guys must be installed. Where tie-ins are not practical the tower must be anchored by means of guys made of wire rope at least 1/2 inch in diameter, securely fastened to anchorages to ensure stability.

(e) Hoistway doors or gates must be not less than 6 feet 6inches high and must be provided with mechanical locks which cannot be operated from the landing side, and must be accessible only to persons on the car.

(f) Cars must be permanently enclosed on all sides and the top, except sides used for entrance and exit, which have car gates or doors.

(g) A door or gate must be provided at each entrance to the car which must protect the full width and height of the car entrance opening.

(h) Overhead protective covering of two inch planking, 3/4 inch plywood or other solid material of equivalent strength must be provided on the top of every personnel hoist.

(i) Doors or gates must be provided with electric contacts which do not allow movement of the hoist when door or gate is opened.

(j) A signal device must be installed in the elevator car and only operated by an attendant who must give the signals for operation, when transporting workers.

(k) An electrical push button signaling device or other approved signaling system must be provided at each floor landing connected to an annunciator in the car. The signal code must be posted adjacent to the signal device at each and every work level and at operator's work level. All wording must be black on a white card, in large clear letters.

(l) The elevator machine and controls must be housed in as a protection against accidents and the weather, and the door kept locked against unauthorized entrance when operator is not in attendance.

(m) Safeties must be capable of stopping and holding the car and rated load when traveling at governor tripping speed.

(n) You must provide cars with a capacity and data plate secured in a conspicuous place on the car or crosshead.

(o) You must not permit internal combustion engines for direct drive.

(p) You must provide normal and final terminal stopping devices.

(q) You must provide an emergency stop switch in the car and marked "stop."

(r) Ropes:

(i) The minimum number of hoisting ropes used must be 3 for traction hoists and two for drum-type hoists.

(ii) The minimum diameter of hoisting and counterweight wire ropes must be 1/2 inch.

(iii) Safety factors:

Minimum Factors of Safety for Suspension Wire Ropes	
Rope speed in feet per minute:	Minimum factor of Safety:
50	7.60
75	7.75
100	7.95
125	8.10
150	8.25
175	8.40
200	8.60
225	8.75
250	8.90
300	9.20
350	9.50
400	9.75
450	10.00
500	10.25
550	10.45
600	10.70

(s) Following assembly and erection of hoists, and before being put in service, you must perform an inspection and test of all functions and safety devices under the supervision of a competent person. A similar inspection and test is required following major alteration of an existing installation. You must inspect and test all hoists at not more than 3 month intervals. You must maintain and keep records on file for the duration of the job.

(t) All personnel hoists used by employees must be constructed of materials and components which meet the specifications for materials, construction, safety devices, assembly, and structural integrity as stated in the American National Standard A10.4-1963, Safety Requirements for Workmen's Hoists. The requirements of this subdivision do not apply to cantilever type personnel hoists.

(u) You must take wire rope out of service when any of the following conditions exist:

(i) In running ropes, 6 randomly distributed broken wires in one lay or 3 broken wires in one strand in one lay;

(ii) Wear of 1/3 the original diameter of outside individual wires. Kinking, crushing, bird caging, or any other damage resulting in distortion of the rope structure;

(iii) Evidence of any heat damage from any cause;

(iv) Reductions from nominal diameter of more than 3/64 inch for diameters to and including 3/4 inch, 1/16 inch for diameter 7/8 inch to 1 1/8 inches inclusive; 3/32 inch for diameters 1 1/4 to 1 1/2 inches inclusive;

(v) In standing ropes, more than two broken wires in one lay in sections beyond end connections or more than one broken wire at an end connection.

(A) Personnel hoists used in bridge tower construction must be approved by a registered professional engineer and erected under the supervision of a qualified engineer competent in this field.

(B) When a hoist tower is not enclosed, the hoist platform or car must be totally enclosed (caged) on all sides for the full height between the floor and the overhead protective covering with 3/4 inch mesh of No. 14 U.S. gauge wire or equivalent. The hoist platform enclosure must include the required gates for loading and unloading.

(C) You must inspect and maintain these hoists on a weekly basis. Whenever the hoisting equipment is exposed to winds exceeding 35 per hour you must inspect it and put it in operable condition before reuse.

(4) You must install and maintain all elevators, manlifts or other lifting devices in conformity with the requirements specified in the Washington state elevator laws and regulations adopted by the elevator section of the department of labor and industries.

Note	*For additional information refer to chapter 296-96 WAC, Safety Regulations and Fees for all Elevators, Dumbwaiters, Escalators and other Conveyances.*

[Statutory Authority: RCW 49.17.010, .040, .050, and .060. 16-09-085 (Order 15-08), § 296-155-77105, filed 04/19/16, effective, 05/20/16. Statutory Authority: RCWs 47.17.010, 49.17.040, 49.17.050, 49.17.440 and 49.17.060. 12-01-086 (Order 08-32), § 296-155-77105, filed 12/20/11, effective 02/01/12.]

WAC 296-155-77110 Base-mounted drum hoists.

(1) **General requirements.**

(a) You must guard exposed moving parts such as gears, projecting screws, setscrews, chain, cables, chain sprockets, and reciprocating or rotating parts, which constitute a hazard.

(b) All controls used during the normal operation cycle must be located within easy reach of the operator's station.

(c) Electric motor operated hoists must be provided with:

(i) A device to disconnect all motors from the line upon power failure and not permit any motor to be restarted until the controller handle is brought to the "off" position;

(ii) Where applicable, an overspeed preventive device;

(iii) A means whereby remotely operated hoists stop when any control is ineffective.

(d) All base-mounted drum hoists in use must meet the applicable requirements for design, construction, installation, testing, inspection, maintenance, and operation, as prescribed by the manufacturer.

(2) **Specific requirements**. (Reserved.)

[Statutory Authority: RCW 49.17.010, .040, .050, and .060. 16-09-085 (Order 15-08), § 296-155-77110, filed 04/19/16, effective, 05/20/16. Statutory Authority: RCWs 47.17.010, 49.17.040, 49.17.050, 49.17.440 and 49.17.060. 12-01-086 (Order 08-32), § 296-155-77110, filed 12/20/11, effective 02/01/12.]

WAC 296-155-77115 Overhead hoists.

(1) **General requirements.**

(a) The safe working load of the overhead hoist, as determined by the manufacturer, must be indicated on the hoist, you must not exceed and this safe working load.

(b) The supporting structure to which the hoist is attached must have a safe working load equal to that of the hoist.

(c) The support must be arranged so as to provide for free movement of the hoist and must not restrict the hoist from lining itself up with the load.

(d) You must install the hoist only in locations that will permit the operator to stand clear of the load at all times.

(e) You must connect air hoists to an air supply of sufficient capacity and pressure to safely operate the hoist. All air hoses supplying air must be positively connected to prevent their becoming disconnected during use.

(f) All overhead hoists in use must meet the applicable requirements for construction, design, installation, testing, inspection, maintenance, and operation, as prescribed by the manufacturer.

(2) **Specific requirements**. (Reserved.)

[Statutory Authority: RCW 49.17.010, .040, .050, and .060. 16-09-085 (Order 15-08), § 296-155-77115, filed 04/19/16, effective, 05/20/16. Statutory Authority: RCWs 47.17.010, 49.17.040, 49.17.050, 49.17.440 and 49.17.060. 12-01-086 (Order 08-32), § 296-155-77115, filed 12/20/11, effective 02/01/12.]

WAC 296-155-77120 Conveyors.

(1) All conveyors in use must meet the applicable requirements for design, construction, inspection, testing, maintenance, and operation, as prescribed in ANSI B20.1-1976, Safety Code for Conveyors, Cableways, and Related Equipment.

(2) **Starting precautions.**

(a) When the entire length of a conveyor is visible from the starting switch, the operator must visually check to make certain that all persons are in the clear before starting the conveyor.

(b) When the entire length of the conveyor is not visible from the starting switch, you must install and operate a positive audible or visible warning system to warn persons that the conveyor will be started.

(c) You must take all reasonable precautions by the operator prior to starting a conveyor, to assure that no person is in a hazardous location where they may be injured when the conveyor is started.

(3) **Riding and walking on conveyors.**

(a) Riding on conveyor chains, belt, or bucket elevators must be prohibited.

(b) You must not allow people to walk on conveyors except for emergency purposes and then only after the conveyor has been de-energized and the person can do so safely.

(c) You must only permit riding of conveyors on the manlift steps and platforms with handholds attached and other safety factors as specified in chapter 296-96 WAC, Safety Regulations and Fees for all elevators, dumbwaiters, escalators, and other conveyances.

(4) **Stop controls.**

(a) Means for stopping the motor or engine of a conveyor must be provided at the operator's station.

(b) If the operator's station is at a remote point, similar provisions for stopping the motor or engine must be provided at the motor or engine location.

(5) **Emergency controls**. Emergency stop switches must be arranged so that the conveyor cannot be started again until the actuating stop switch has been reset to running or "on" position.

(6) **Screw type conveyors**. You must guard screw or auger type conveyors to prevent employee contact with turning flights.

(7) **Overhead conveyors.**

(a) Where a conveyor passes over work areas, aisles, or thoroughfares, you must provide guards to protect persons required to work below the conveyors.

(b) Where a conveyor crosses over an aisle or passageway, you must conspicuously mark it by suitable signs, as required by Part E of this chapter.

(c) When the return strand of a conveyor operates within 7 feet of the floor you must provide a trough of sufficient strength to carry the weight resulting from a broken chain. If the strands are over a passageway, you must provide a means to catch and support the ends of the chain in the event of a break.

(8) **Emergency stop.**

(a) Conveyors must be provided with an emergency stopping device (panic-type) which can be reached from the conveyor.

(b) The emergency stopping device must be located near the material entrance and must stop the conveyor a sufficient distance away from the hazard to prevent injury.

(c) Where the conveyor leading into such equipment is under constant control of an operator who has full view of the material entrance who is located or restrained where they cannot possibly fall onto the conveyor an emergency stopping device is not mandatory.

(9) **Conveyor lockout.**

(a) You must lock out conveyors with a padlock at any time repair, maintenance, or clean-up work is being performed.

(b) Tags or push-button stops are not acceptable.

(10) Where conveyors are in excess of 7 feet in height, you must provide means to safely permit essential inspection and maintenance operations.

(11) **Conveyor repair.**

(a) You must carefully inspect any part showing signs of significant wear and replace it prior to reaching a condition where it may create a hazard.

(b) Replacement parts must be equal to or exceed the manufacturer's specifications.

[Statutory Authority: RCW 49.17.010, .040, .050, and .060. 16-09-085 (Order 15-08), § 296-155-77120, filed 04/19/16, effective, 05/20/16. Statutory Authority: RCWs 47.17.010, 49.17.040, 49.17.050, 49.17.440 and 49.17.060. 12-01-086 (Order 08-32), § 296-155-77120, filed 12/20/11, effective 02/01/12.]

WAC 296-155-77125 Aerial cableways.

(1) Cableways must be designed to withstand the maximum required load with a safety factor of 5 on all its parts.

(2) You must install safety stay lines at anchor ends and equal in strength to the cableway.

(3) Where towers are required you must securely guy them or ensure they are constructed to carry the maximum sustained load.

(4) You must provide towers with ladderways to facilitate safe access for repairs and inspections.

(5) Towers must have sufficient elevation to provide substantial clearance for cableway and loads carried over all contemplated work.

(6) You must guard running lines and sheaves, where accessible.

(7) You must lubricate and visually inspect the carrier, carrier sheaves, bearings, bucket latch and all working parts daily.

(8) You must keep all the wire ropes lubricated with proper lubricant.

(9) You must make daily visual inspection of the button line, especially at the buttons where abrasion is caused by the carrier rebound. You must place runner and steel ferrule shock absorbers at each end of buttons.

(10) You must adequately all loading, unloading and working stations for night operation. You must install clearance lights on all high points under cableway.

[Statutory Authority: RCW 49.17.010, .040, .050, and .060. 16-09-085 (Order 15-08), § 296-155-77125, filed 04/19/16, effective, 05/20/16. Statutory Authority: RCWs 47.17.010, 49.17.040, 49.17.050, 49.17.440 and 49.17.060. 12-01-086 (Order 08-32), § 296-155-77125, filed 12/20/11, effective 02/01/12.]

WAC 296-155-77130 Concrete bucket towers.

(1) A concrete bucket tower located inside a structure, and which is 3 feet or less from any scaffold or the edge of the shaftway or floor opening in which it is installed, must be enclosed on all sides with heavy wire netting formed of No. 16 U.S. gauge 1 1/2 inch mesh. Wood slats placed vertically and spaced not more than 1 1/2 inches apart may be used instead of the netting. The enclosure must extend at least 8 feet above such scaffold or floor.

(2) A concrete bucket tower located outside a structure must be enclosed to a height of 8 feet at lower landing with heavy wire netting formed of No. 16 U.S. gauge wire 1 1/2 inch mesh or other suitable material.

(3) You must form openings with platforms at each floor level, and you must guard the runway leading to the tower with standard railings and toeboards.

(4) If the bucket is discharged into a chute, the chute must be substantially constructed of wood or metal and extend from the tower to the point where the concrete is to be poured, or transferred to vehicles or hoppers, and the chute must be substantially supported.

(5) You must drain the pit and ensure that it is deep enough so that any spill from the bucket will fall below the blocking on which the bucket rests while being filled.

(6) You must not allow people to work in the pit without first resting the bucket on strong timbers supported on two sides of the tower.

(7) You must securely guy the bucket tower at two or more elevations as may be necessary.

(8) You must carefully align the guide rails and keep them in good condition to prevent the bucket being caught or clogged while being hoisted.

(9) The sheaves over which the cable passes must be firmly secured to overhead sheave beams and supporting frame work and you must keep the sheaves lubricated.

(10) You must frequently inspect and renew the hoisting cable when broken wires or other defects are discovered.

(11) A platform provided with standard railings and toeboards must be constructed at the point where the concrete is dumped into the chute. You must fasten a ladder to one side of the tower to enable a person to reach the platform safely.

(12) You must prohibit workers from riding in or on the bucket.

[Statutory Authority: RCW 49.17.010, .040, .050, and .060. 16-09-085 (Order 15-08), § 296-155-77130, filed 04/19/16, effective, 05/20/16. Statutory Authority: RCWs 47.17.010, 49.17.040, 49.17.050, 49.17.440 and 49.17.060. 12-01-086 (Order 08-32), § 296-155-77130, filed 12/20/11, effective 02/01/12.]

WAC 296-155-77135 Hoisting engines.

(1) All gearing on hoisting engines must be enclosed. Steam piping subject to contact must be insulated and if electrical equipment is used, it must be grounded.

(2) Hoisting engines must be of ample capacity and equipped with brakes capable of sustaining 150% of rated load for stopping and sustaining the maximum load in any position.

(3) You must protect hoisting engines against the weather and falling objects by a substantial cover.

(4) You must frequently inspect all hoisting equipment, and keep brakes, gears and operating levers in working condition.

(5) You must provide guards to prevent persons coming in contact with hoisting cables.

(6) You must keep brake drums free of oil or grease.

(7) You must use a positive operated pawl in addition to the brake to hold the load when it is suspended. Counter weight operated dogs are prohibited.

(8) You must not set up hoisting engines in the street when it can be avoided; but, if so located, they must be completely housed.

(9) Only competent personnel must operate material hoists.

(10) The operator must not lift a load when a person is on the hoist, and all towers must be posted to that effect, except as provided in other sections of this part.

(11) You must notify the operator when any person goes up the tower ladder, or before any work is done on any part of the tower, overhead work, hoist or in the pit.

(12) The operator must make daily inspections of all equipment before starting operations.

(13) When the hoisting engine is located close to the building operation, you must cover it with a strong plank roof covering to protect the operator from falling objects.

(14) You must discharge exhaust steam pipes overhead so as not to obstruct the view of the operator or scald persons.

(15) In the operation of hoists, the operator must always give a warning sign or signal before starting.

(16) When hoisting machinery is set on an elevated platform such platform must be of substantial construction and standard guard rails and toeboards must be provided along all open sides of the platform.

(17) Material hoists of more than one drum capacity must be equipped with brake controls.

(18) A safety strap must be provided on the foot block of all hoists.

(19) When electric motors are used for hoisting equipment, they must be operated only by qualified personnel.

(a) Installations must be made in accordance with provisions of local and national electrical safety codes, and must be made by experienced workers only.

(b) You must always use enclosed switches and fuses.

(c) You must screen switchboards, and place a sign warning unauthorized persons to keep clear.

[Statutory Authority: RCW 49.17.010, .040, .050, and .060. 16-09-085 (Order 15-08), § 296-155-77135, filed 04/19/16, effective, 05/20/16. Statutory Authority: RCWs 47.17.010, 49.17.040, 49.17.050, 49.17.440 and 49.17.060. 12-01-086 (Order 08-32), § 296-155-77135, filed 12/20/11, effective 02/01/12.]

PART S
DEMOLITION

LAST UPDATED: 05/20/2016

WAC 296-155-775 Preparatory operations. 1

WAC 296-155-780 Stairs, passageways, and ladders. 2

WAC 296-155-785 Chutes. 3

WAC 296-155-790 Removal of materials through floor openings. 3

WAC 296-155-795 Removal of walls, masonry sections, and chimneys. 3

WAC 296-155-800 Manual removal of floors. 4

WAC 296-155-805 Removal of walls, floors, and material with equipment. 5

WAC 296-155-810 Catch platforms. 5

WAC 296-155-815 Storage. 6

WAC 296-155-820 Removal of steel construction. 6

WAC 296-155-825 Mechanical demolition. 6

WAC 296-155-830 Selective demolition by explosives. 7

WAC 296-155-775 Preparatory operations.

(1) Prior to permitting employees to start demolition operations, you must make an engineering survey by a competent person, of the structure to determine structural integrity and the possibility of unplanned collapse of any portion of the structure. You must similarly check adjacent structures where employees may be exposed. You must have in writing, evidence that such a survey has been performed.

(2) You must maintain a copy of the survey report and of the plans and/or methods of operations at the job site for the duration of the demolition operation.

(3) Any device or equipment such as scaffolds, ladders, derricks, hoists, etc., used in connection with demolition work must be constructed, installed, inspected, maintained and operated in accordance with the regulations governing the construction, installation, inspection, maintenance and operation of such device or equipment as specified in other parts of this chapter.

(4) You must observe federal and state codes, safety standards, rules, regulations, and ordinances governing any and all phases of demolition work at all times.

(5) You must conduct demolition of all buildings and structures under competent supervision, and you must afford safe working conditions to the employees.

(6) When employees are required to work within a structure to be demolished which has been damaged by fire, flood, explosion, or other cause, you must shore or brace the walls or floors.

(7) You must shut off, caps, or otherwise control all electric, gas, water, steam, sewer, and other service lines outside the building line before demolition work is started. In each case, you must notify any utility company which is involved in advance.

(8) If it is necessary to maintain any power, water or other utilities during demolition, such lines must be temporarily relocated, as necessary, and protected.

(9) You must determine whether asbestos, hazardous materials, hazardous chemicals, gases, explosives, flammable materials, or similarly dangerous substances are present at the work site. When the presence of any such substance is apparent or suspected, you must perform testing and removal or purging and eliminate the hazard before demolition is started. Removal of such substances must be in accordance with the requirements of chapters 296-62 and 296-65 WAC.

(10) Where a hazard exists from fragmentation of glass, you must remove such hazards.

(11) Where a hazard exists to employees falling through wall openings, you must protect the opening to a height of between 36 and 42 inches.

(12) When debris is dropped without the use of chutes, the area onto which the material is dropped must be completely enclosed with barricades not less than 42 inches high and not less than 20 feet back from the projected edge of the opening above. You must post signs, warning of the hazard of falling materials, at each level. You must not permit removal in this lower area until debris handling ceases above.

(13) All floor openings, not used as material drops, must be covered over with material substantial enough to support the weight of any load which may be imposed. You must properly secure such material to prevent its accidental movement.

(14) Except for the cutting of holes in floors for chutes, holes through which to drop materials, preparation of storage space, and similar necessary preparatory work, you must begin the demolition of exterior walls and floor construction at the top of the structure and proceed downward. You must remove and drop each story of exterior wall and floor construction into the storage space before commencing the removal of exterior walls and floors in the story next below.

(15) You must not permit workers to carry on a demolition operation which will expose persons working on a lower level to danger.

(16) You must completely protect employee entrances to multistory structures being demolished by sidewalk sheds or canopies, or both, providing protection from the face of the building for a minimum of 8 feet. All such canopies must be at least two feet wider than the building entrances or openings (one foot wider on each side thereof), and must be capable of sustaining a load of 150 pounds per square foot.

(17) You must withdraw protruding nails in boards, planks and timber, driven in or bent over as soon as the same is removed from the structure being demolished.

(18) You must sprinkle any material to be removed which will cause dust to be formed, with water to lay the dust incidental to its removal.

[Statutory Authority: RCW 49.17.010, .040, .050, and .060. 16-09-085 (Order 15-08), § 296-155-775, filed 04/19/16, effective, 05/20/16. Statutory Authority: Chapter 49.17 RCW. 94-15-096 (Order 94-07), § 296-155-775, filed 7/20/94, effective 9/20/94; 87-24-051 (Order 87-24), § 296-155-775, filed 11/30/87. Statutory Authority: RCW 49.17.050(2) and 49.17.040. 87-10-008 (Order 87-06), § 296-155-775, filed 4/27/87. Statutory Authority: RCW 49.17.040 and 49.17.050. 86-03-074 (Order 86-14), § 296-155-775, filed 1/21/86; Order 74-26, § 296-155-775, filed 5/7/74, effective 6/6/74.]

WAC 296-155-780 Stairs, passageways, and ladders.

(1) You must only use those stairways, passageways, and ladders, designated as means of access to the structure of building. Other access ways must be entirely closed off at all times.

(2) You must periodically inspect all stairs, passageways, ladders and incidental equipment thereto, which are covered by this section and maintain them in a clean safe condition.

(3) You must secure all ladders in position.

(4) In a multistory building, when a stairwell is being used, you must properly illuminate by either natural or artificial means, and completely and substantially covered over at a point not less than two floors below the floor on which work is being performed. Access to the floor where the work is in progress must be through a properly lighted, protected, and separate passageway.

[Statutory Authority: RCW 49.17.010, .040, .050, and .060. 16-09-085 (Order 15-08), § 296-155-780, filed 04/19/16, effective, 05/20/16. Order 74-26, § 296-155-780, filed 5/7/74, effective 6/6/74.]

WAC 296-155-785 Chutes.

(1) You must not drop any material to any point lying outside the exterior walls of the structure unless the area is effectively protected.

(2) All materials chutes, or sections thereof, at an angle of more than 45° from the horizontal, must be entirely enclosed, except for openings equipped with closures at or about floor level for the insertion of materials. The openings must not exceed 48 inches in height measured along the wall of the chute. At all stories below the top floor, you must keep such openings closed when not in use.

(3) You must install a substantial gate in each chute at or near the discharge end. A competent employee must be assigned to control the operation of the gate, and the backing and loading of trucks.

(4) When operations are not in progress, you must securely close off the area surrounding the discharge end of a chute.

(5) You must protect any chute opening, into which workers dump debris, by a substantial guardrail between 36 and 42 inches above the floor or other surface on which the employees stand to dump the material. You must solidly cover over any space between the chute and the edge of openings in the floors through which it passes.

(6) Where the material is dumped from mechanical equipment or wheelbarrows, you must provide a securely attached toeboard or bumper, not less than 4 inches thick and 6 inches high, at each chute opening.

(7) Chutes must be designed and constructed of such strength as to eliminate failure due to impact of materials or debris loaded therein.

[Statutory Authority: RCW 49.17.010, .040, .050, and .060. 16-09-085 (Order 15-08), § 296-155-785, filed 04/19/16, effective, 05/20/16. Statutory Authority: Chapter 49.17 RCW. 94-15-096 (Order 94-07), § 296-155-785, filed 7/20/94, effective 9/20/94; Order 74-26, § 296-155-785, filed 5/7/74, effective 6/6/74.]

WAC 296-155-790 Removal of materials through floor openings.

Any openings cut in a floor for the disposal of materials must be no larger in size than 25% of the aggregate of the total floor area, unless the lateral supports of the removed flooring remain in place. Floors weakened or otherwise made unsafe by demolition operations must be shored to carry safely the intended imposed load from demolition operations.

[Statutory Authority: RCW 49.17.010, .040, .050, and .060. 16-09-085 (Order 15-08), § 296-155-790, filed 04/19/16, effective, 05/20/16. Order 74-26, § 296-155-790, filed 5/7/74, effective 6/6/74.]

WAC 296-155-795 Removal of walls, masonry sections, and chimneys.

(1) You must not permit masonry walls, or other sections of masonry, to fall upon the floors of the building in such masses as to exceed the safe carrying capacities of the floors.

(2) You must not permit any wall section, which is more than one story in height, to stand alone without lateral bracing, unless such wall was originally designed and constructed to stand without such lateral support, and is in a condition safe enough to be self-supporting. You must leave all walls in a stable condition at the end of each shift.

(3) You must not permit employees to work on the top of a wall when weather conditions constitute a hazard.

(4) You must not cut or remove structural or load-supporting members on any floor until all stories above such a floor have been demolished and removed. This provision must not prohibit the cutting of floor beams for the disposal of materials or for the installation of equipment, provided that the requirements of WAC 296-155-790 and 296-155-800 are met.

(5) You must plank solid floor openings within 10 feet of any wall being demolished, except when employees are kept out of the area below.

(6) In buildings of "skeleton-steel" construction, the steel framing may be left in place during the demolition of masonry. Where this is done, you must clear all steel beams, girders, and similar structural supports of all loose material as the masonry demolition progresses downward.

(7) You must provide walkways or ladders to enable employees to safely reach or leave any scaffold or wall.

(8) You must not demolish walls, which serve as retaining walls to support earth or adjoining structures, until such earth has been properly braced or adjoining structures have been properly underpinned.

(9) You must not use walls, which are to serve as retaining walls against which debris will be piled, unless capable of safely supporting the imposed load.

[Statutory Authority: RCW 49.17.010, .040, .050, and .060. 16-09-085 (Order 15-08), § 296-155-795, filed 04/19/16, effective, 05/20/16. Order 74-26, § 296-155-795, filed 5/7/74, effective 6/6/74.]

WAC 296-155-800 Manual removal of floors.

(1) Openings cut in a floor must extend the full span of the arch between supports.

(2) Before demolishing any floor arch, you must remove debris and other material from such arch and other adjacent floor area. You must provide for planks not less than two inches by 10 inches in cross section, full size undressed, and must be used by employees to stand on while breaking down floor arches between beams. You must locate such planks so as to provide a safe support for the workers should the arch between the beams collapse. The open space between planks must not exceed 16 inches.

(3) You must provide safe walkways, not less than 18 inches wide, formed of planks not less than two inches thick if wood, or of equivalent strength if metal, and ensure that they are used by workers when necessary to enable them to reach any point without walking upon exposed beams.

(4) You must install stringers of ample strength to support the flooring planks, and the ends of such stringers must be supported by floor beams or girders, and not by floor arches alone.

(5) You must lay planks together over solid bearings with the ends overlapping at least one foot.

(6) When floor arches are being removed, you must not allow employees in the area directly underneath, and you must barricade such an area to prevent access to it.

(7) You must not start demolition of floor arches until they, and the surrounding floor area for a distance of 20 feet, have been cleared of debris and any other unnecessary materials.

[Statutory Authority: RCW 49.17.010, .040, .050, and .060. 16-09-085 (Order 15-08), § 296-155-800, filed 04/19/16, effective, 05/20/16. Statutory Authority: Chapter 49.17 RCW. 94-15-096 (Order 94-07), § 296-155-800, filed 7/20/94, effective 9/20/94; Order 74-26, § 296-155-800, filed 5/7/74, effective 6/6/74.]

WAC 296-155-805 Removal of walls, floors, and material with equipment.

(1) You must not use mechanical equipment on floors or working surfaces unless such floors or surfaces are of sufficient strength to support the imposed load.

(2) Floor openings must have curbs or stop-logs to prevent equipment from running over the edge.

(3) Mechanical equipment used must meet the requirements specified in Parts M and R of this chapter, cranes must meet the requirements in Part L of this chapter.

[Statutory Authority: RCW 49.17.010, .040, .050, and .060. 16-09-085 (Order 15-08), § 296-155-805, filed 04/19/16, effective, 05/20/16. Statutory Authority: Order 74-26, § 296-155-805, filed 5/7/74, effective 6/6/74.]

WAC 296-155-810 Catch platforms.

(1) During the demolition of the exterior walls of a structure originally more than 70 feet high, you must erect catch platforms along the exterior faces of such walls where necessary to prevent injury to persons working below.

(2) You must construct and maintain such catch platforms not more than 3 stories below the story from which the exterior walls are being removed, until the demolition has progressed to within 3 stories of the ground level.

(3) Catch platforms must not be less than 5 feet in width measured in a horizontal distance from the face of the structure and constructed of outriggers and planks. You must lay planks tight together and without openings between the planks and the wall.

> *Note: Catch platforms may be constructed of other approved materials of equal strength and security against falling material.*

(4) Catch platforms must be capable of sustaining a uniform live load of not less than 125 pounds per square foot.

[Statutory Authority: RCW 49.17.010, .040, .050, and .060. 16-09-085 (Order 15-08), § 296-155-810, filed 04/19/16, effective, 05/20/16. Order 74-26, § 296-155-810, filed 5/7/74, effective 6/6/74.]

WAC 296-155-815 Storage.

(1) The storage of waste material and debris on any floor must not exceed the allowable floor loads.

(2) In buildings having wooden floor construction, the flooring boards may be removed from not more than one floor above grade to provide storage space for debris, provided falling material is not permitted to endanger the stability of the structure.

(3) When wood floor beams serve to brace interior walls or free-standing exterior walls, you must leave such beams in place until other equivalent support can be installed to replace them.

(4) Floor arches, to an elevation of not more than 25 feet above grade, may be removed to provide storage area for debris: Provided, That such removal does not endanger the stability of the structure.

(5) You must block off storage space into which material is dumped, except for openings necessary for the removal of material. You must keep such openings closed at all times when material is not being removed.

[Statutory Authority: RCW 49.17.010, .040, .050, and .060. 16-09-085 (Order 15-08), § 296-155-815, filed 04/19/16, effective, 05/20/16. Order 74-26, § 296-155-815, filed 5/7/74, effective 6/6/74.]

WAC 296-155-820 Removal of steel construction.

(1) When floor arches have been removed, you must provide planking in accordance with WAC 296-155-800(2) for the workers engaged in razing the steel framing.

(2) Cranes and derricks used must meet the requirements specified in Part L of this chapter. Other hoisting equipment must meet the requirements in Part R of this chapter.

(3) You must dismantle steel construction column length by column length, and tier by tier (columns may be in two-story lengths).

(4) You must not overstress any structural member being dismembered.

[Statutory Authority: RCW 49.17.010, .040, .050, and .060. 16-09-085 (Order 15-08), § 296-155-820, filed 04/19/16, effective, 05/20/16. Statutory Authority: RCWs 47.17.010, 49.17.040, 49.17.050, 49.17.440 and 49.17.060. 12-01-086 (Order 08-32), § 296-155-820, filed 12/20/11, effective 02/01/12. Statutory Authority: Order 74-26, § 296-155-820, filed 5/7/74, effective 6/6/74.]

WAC 296-155-825 Mechanical demolition.

(1) You must not permit any workers in any area, which can be adversely affected by demolition operations, when balling or clamming is being performed. You must only permit those workers necessary for the performance of the operations in this area at any other time.

(2) The weight of the demolition ball must not exceed 50% of the crane's rated load, based on the length of the boom and the maximum angle of operation at which the demolition ball will be used, or it must not exceed 25% of the nominal breaking strength of the line by which it is suspended, whichever results in a lesser value.

(3) The crane boom and loadline must be as short as possible.

(4) The ball must be attached to the loadline with a swivel-type connection to prevent twisting of the loadline, and must be attached by positive means in such manner that the weight cannot become accidentally disconnected.

(5) When pulling over walls or portions thereof, all steel members affected must have been previously cut free.

(6) You must remove all roof cornices or other such ornamental stonework prior to pulling walls over.

(7) During demolition, continuing inspections by a competent person must be made as the work progresses to detect hazards resulting from weakened or deteriorated floors, or walls, or loosened material. You must not permit any employee to work where such hazards exist until they are corrected by shoring, bracing, or other effective means.

[Statutory Authority: RCW 49.17.010, .040, .050, and .060. 16-09-085 (Order 15-08), § 296-155-825, filed 04/19/16, effective, 05/20/16. Order 74-26, § 296-155-825, filed 5/7/74, effective 6/6/74.]

WAC 296-155-830 Selective demolition by explosives.

Selective demolition by explosives must comply with chapter 296-52 WAC.

[Statutory Authority: RCW 49.17.010, .040, .050, and .060. 16-09-085 (Order 15-08), § 296-155-830, filed 04/19/16, effective, 05/20/16. Statutory Authority: RCW 49.17.040 and 49.17.050. 86-03-074 (Order 86-14), § 296-155-830, filed 1/21/86; Order 74-26, § 296-155-830, filed 5/7/74, effective 6/6/74.]

PART T
Safety Standards for the Possession, Handling and Use of Explosives

Refer to Chapter 296-52 WAC

PART U
POWER DISTRIBUTION AND TRANSMISSION LINES

(RESERVED)

Refer to chapter 296-45 WAC, "Safety standards for electrical workers."

PART V
ROLLOVER PROTECTIVE STRUCTURES AND OVERHEAD PROTECTION

LAST UPDATED: 05/20/2016

WAC 296-155-950 Rollover protective structures (ROPS) for material handling equipment. 1

WAC 296-155-955 Minimum performance criteria for rollover protective structures for designated scrapers, loaders, dozers, graders, and crawler tractors. 2

WAC 296-155-960 Protective frame (ROPS) test procedures and performance requirements for wheel-type agricultural and industrial tractors used in construction. 11

WAC 296-155-965 Overhead protection for operators of agricultural and industrial tractors. 23

WAC 296-155-950 Rollover protective structures (ROPS) for material handling equipment.

(1) **Coverage.**

(a) This section applies to the following types of material handling equipment: To all rubber-tired, self-propelled scrapers, rubber-tired front-end loaders, rubber-tired dozers, wheel-type agricultural and industrial tractors, crawler tractors, crawler-type loaders, and motor graders, with or without attachments, that are used in construction work. This requirement does not apply to sideboom pipelaying tractors.

(b) The promulgation of specific standards for rollover protective structures for compactors and rubber-tired skidsteer equipment is reserved pending consideration of standards currently being developed.

(2) Equipment manufactured on or after September 1, 1972, Material handling machinery described in subsection (1) of this section and manufactured on or after September 1, 1972, must be equipped with rollover protective structures which meet the minimum performance standards prescribed in WAC 296-155-955 and 296-155-960, as applicable.

(3) **Equipment manufactured before September 1, 1972.**

(a) All material handling equipment described in subsection (1) of this section and manufactured or placed in service (owned or operated by the employer) prior to September 1, 1972, must be fitted with rollover protective structures.

Machines manufactured before July 1, 1969; Reserved pending further study, development, and review.

(b) Rollover protective structures and supporting attachment must meet the minimum performance criteria detailed in WAC 296-155-955 and 296-155-960, as applicable or must be designed, fabricated, and installed in a manner which will support, based on the ultimate strength of the metal, at least two times the weight of the prime mover applied at the point of impact.

(i) The design objective must be to minimize the likelihood of a complete overturn and thereby minimize the possibility of the operator being crushed as a result of a rollover or upset.

(ii) The design must provide a vertical clearance of at least 52 inches from the work deck to the ROPS at the point of ingress or egress.

(4) **Remounting**. ROPS removed for any reason, must be remounted with equal quality, or better, bolts or welding as required for the original mounting.

(5) **Labeling**. Each ROPS must have the following information permanently affixed to the structure:

(a) Manufacturer or fabricator's name and address;

(b) ROPS model number, if any;

(c) Machine make, model, or series number that the structure is designed to fit.

(6) **Machines meeting certain existing governmental requirements**. Any machine in use, equipped with rollover protective structures, must be deemed in compliance with this section if it meets the rollover protective structures requirements of the U.S. Army Corps of Engineers, or the Bureau of Reclamation of the U.S. Department of the Interior in effect on April 5, 1972. The requirements in effect are:

(a) U.S. Army Corps of Engineers: General Safety Requirements, EM-385-1-1 (March 67).

(b) Bureau of Reclamation, U.S. Department of the Interior: Safety and Health Regulations for Construction, Part II (September 1971).

(7) ROPS meeting the criteria set forth in SAE J1040 a and SAE J1040 b must be regarded as substantially meeting the requirements of this section, even if they do not meet all the criteria set forth in earlier criteria documents on which the present standard is based.

[Statutory Authority: RCW 49.17.010, .040, .050, and .060. 16-09-085 (Order 15-08), § 296-155-950, filed 04/19/16, effective, 05/20/16. Statutory Authority: Chapter 49.17 RCW. 91-03-044 (Order 90-18), § 296-155-950, filed 1/10/91, effective 2/12/91. Statutory Authority: RCW 49.17.040 and 49.17.050. 86-03-074 (Order 86-14), § 296-155-950, filed 1/21/86; Order 76-29, § 296-155-950, filed 9/30/76; Order 74-26, § 296-155-950, filed 5/7/74, effective 6/6/74.]

WAC 296-155-955 Minimum performance criteria for rollover protective structures for designated scrapers, loaders, dozers, graders, and crawler tractors.

(1) **Definitions applicable to this section**. For purposes of this section, **"vehicle weight"** means the manufacturer's maximum weight of the prime mover for rubber-tired self-propelled scrapers. For other types of equipment to which this section applies, **"vehicle weight"** means the manufacturer's maximum recommended weight of the vehicle plus the heaviest attachment.

(2) **General.**

(a) This section prescribes minimum performance criteria for rollover protective structures (ROPS) for rubber-tired self-propelled scrapers; rubber-tired front-end loaders and rubber-tired dozers; crawler tractors, and crawler-type loaders, and motor graders. The vehicle and ROPS as a system must have the structural characteristics prescribed in subsection (7) of this section for each type of machine described in this subsection.

(b) Equipment listed in subsection (2)(a) of this section may be exempted from the requirements for fitment of ROPS where it can be shown, to the satisfaction of the department, that the equipment will only be used where no rollover hazard will exist.

(3) The static laboratory test prescribed herein will determine the adequacy of the structures used to protect the operator under the following conditions:

(a) For rubber-tired self-propelled scrapers, rubber-tired front-end loaders, and rubber-tired dozers: Operating between 0 and 10 miles per hour over hard clay where rollover would be limited to a maximum roll angle of 360° down a slope of 30° maximum.

(b) For motor graders: Operating between 0 and 10 miles per hour over hard clay where rollover would be limited to 360° down a slope of 30° maximum.

(c) For crawler tractors and crawler-type loaders: Operating between 0 and 10 miles per hour over hard clay where rollover would be limited to a maximum roll angle of 360° down a slope of 45°.

(4) **Facilities and apparatus.**

(a) The following material is necessary:

(i) Material, equipment, and tiedown means adequate to ensure that the ROPS and its vehicle frame absorb the applied energy.

(ii) Equipment necessary to measure and apply loads to the ROPS. Adequate means to measure deflection and lengths should also be provided.

(iii) Recommended, but not mandatory, types of test setups are illustrated in Figure V-1 for all types of equipment to which this section applies; and in Figure V-2 for rubber-tired self-propelled scrapers; Figure V-3 for rubber-tired front-end loaders, rubber-tired dozers, and motor graders; and Figure V-4 for crawler tractors and crawler-type loaders.

(b) Table V-1 contains a listing of the required apparatus for all types of equipment described in subsection (2)(a) of this section.

Table V-1

Means to measure	Accuracy
Deflection of ROPS, inches	± 5% of deflection measured.
Vehicle weight, pounds	± 5% of the weight measured.
Force applied to frame, pounds	± 5% of force measured.
Dimensions of critical zone, inches.	± 0.5 in.

(5) **Vehicle condition**. The ROPS to be tested must be attached to the vehicle structure in the same manner as it will be attached during vehicle use. A totally assembled vehicle is not required. However, the vehicle structure and frame which support the ROPS must represent the actual vehicle installation. All normally detachable windows, panels, or nonstructural fittings must be removed so that they do not contribute to the strength of the ROPS.

(6) **Test procedure**. The test procedure must include the following, in the sequence indicated:

(a) Energy absorbing capabilities of ROPS must be verified when loaded laterally by incrementally applying a distributed load to the longitudinal outside top member of the ROPS, as shown in Figure V-1, V-2 or V-3 as applicable. The distributed load must be applied so as to result in approximately uniform deflection of the ROPS. The load increments should correspond with approximately 0.5 in. ROPS deflection increment in the direction of the load application, measured at the ROPS top edge. Should the operator's seat be off center, the load must be applied on the off center side. For each applied load increment, the total load (lb.) versus corresponding deflection (in.) must be plotted, and the area under the load-deflection curve must be calculated. This area is equal to the energy (in.-lb.) absorbed by the ROPS. For a typical load-deflection curve and calculation method, see Figure V-5.

Incremental loading must be continued until the ROPS has absorbed the amount of energy and the minimum applied load specified under subsection (7) of this section has been reached or surpassed.

(b) To cover the possibility of the vehicle coming to rest on its top, the support capability must be verified by applying a distributed vertical load to the top of the ROPS so as to result in approximately uniform deflection (see Figure V-1).The load magnitude is specified in subsection (7)(b)(iii) of this section.

(c) The low temperature impact strength of the material used in the ROPS must be verified by suitable material tests or material certification (see subsection (7)(b)(iv) of this section).

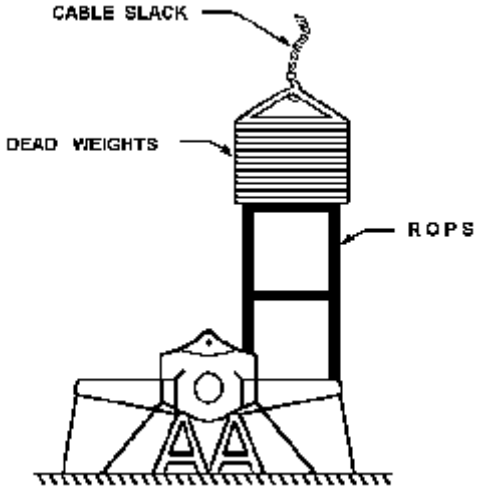

FIGURE V-1
Vertical loading setup for all types of equipment described in WAC 296-155-955(1).

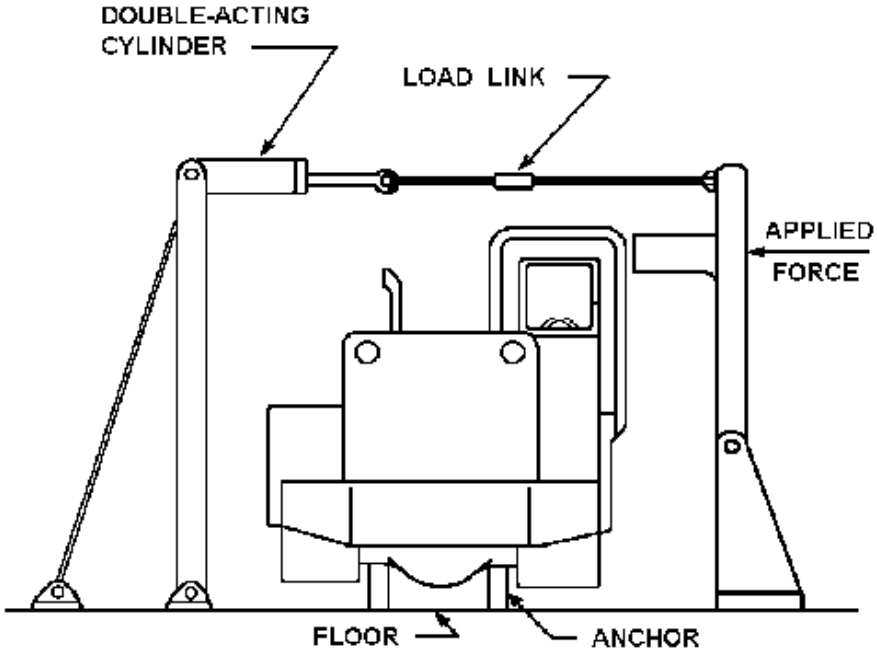

FIGURE V-2
Test setup for rubber-tired self-propelled scrapers.

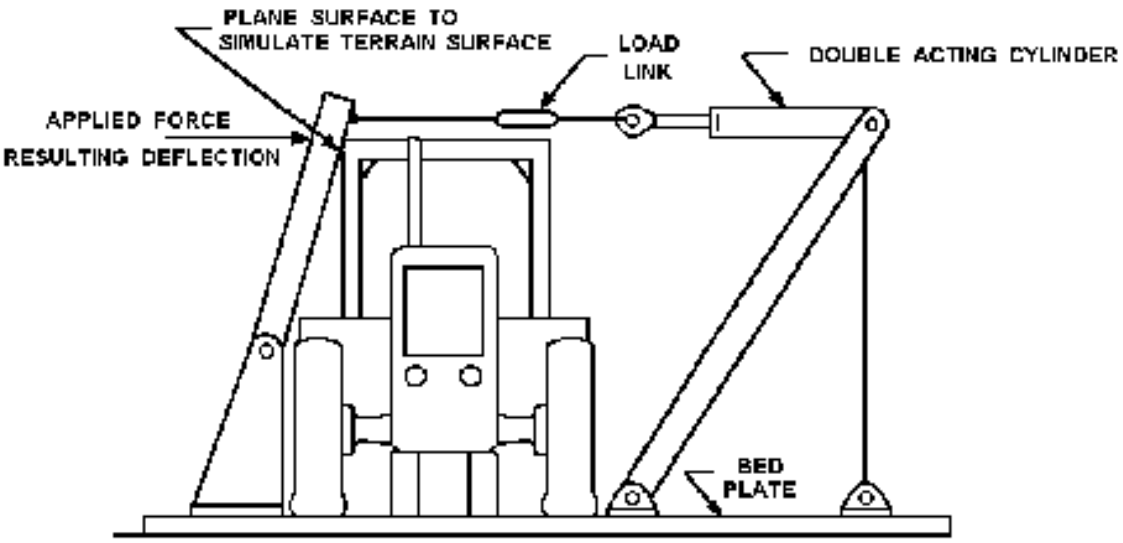

FIGURE V-3
Test setup for rubber-tired front-end loaders, rubber-tired dozers, and motor graders.

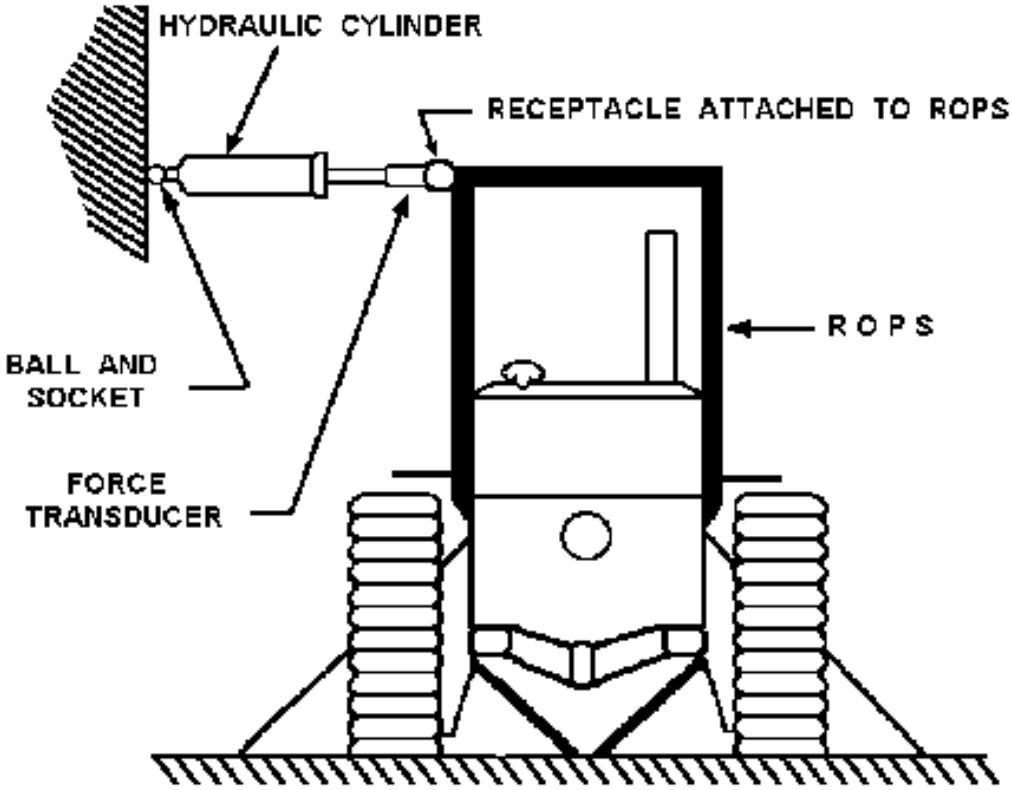

FIGURE V-4
Side-loading setup for crawler tractors and crawler loaders.

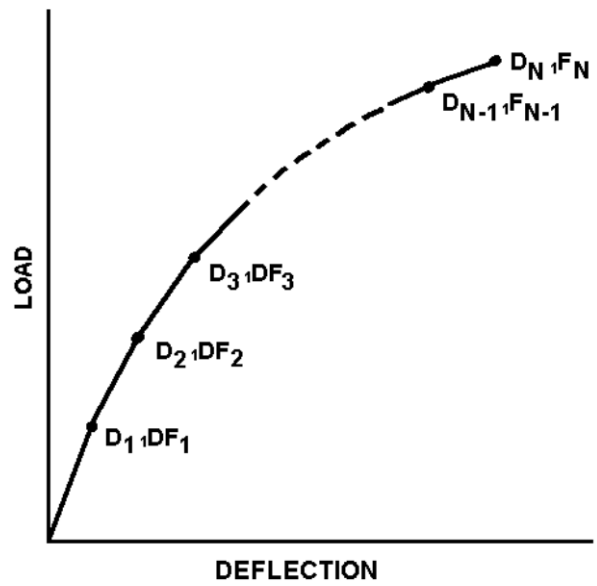

A = TOTAL DEFLECTION
F = FORCE APPLIED

$$\text{AREA} = \frac{D_1 F_1}{2} + (D_2 - D_1)\frac{F_1 F_2}{2} + (D_3 - D_2)\frac{F_2 F_3}{2} + \ldots + (D_N - D_{N-1})\frac{F_{N-1} + F_N}{2}$$

FIGURE V-5
Determination of energy area under force deflection curve for all types of ROPS equipment defined in WAC 296-155-955.

(7) **Performance requirements.**

(a) General performance requirements.

(i) You must not carry out any repairs or straightening of any member out between each prescribed test.

(ii) During each test, no part of the ROPS must enter the critical zone as detailed in SAE J397 (1969). Deformation of the ROPS must not allow the plane of the ground to enter this zone.

(b) Specific performance requirements.

(i) The energy requirement for purposes of meeting the requirements of subsection (6)(a) of this section is to be determined by referring to the plot of the energy versus weight of vehicle (see Figure V-6 for rubber-tired self-propelled scrapers; Figure V-7 for rubber-tired front-end loaders and rubber-tired dozers; Figure V-8 for crawler tractors and crawler-type loaders; and Figure V-9 for motor graders. For purposes of this section, force and weight are measured as pounds; energy (U) is measured as inch-pounds).

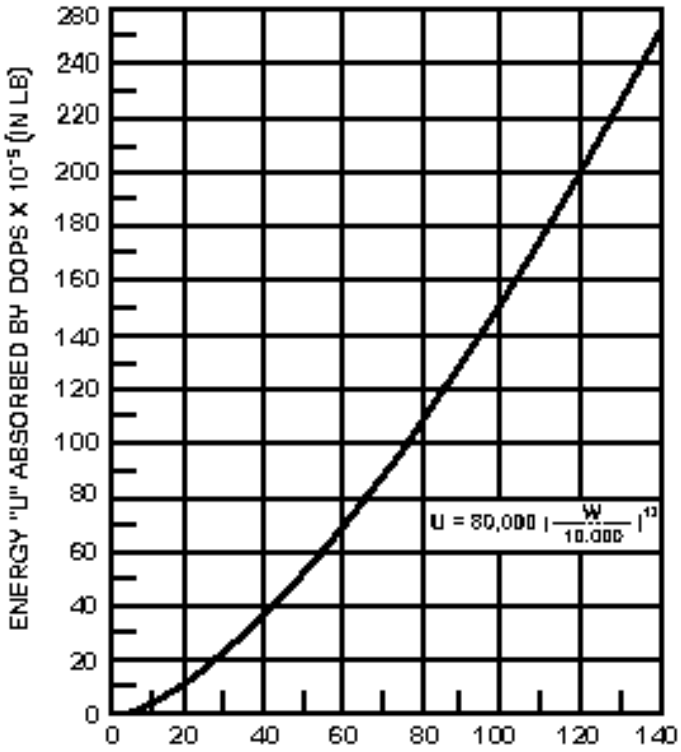

FIGURE V-6
Energy absorbed versus vehicle weight.

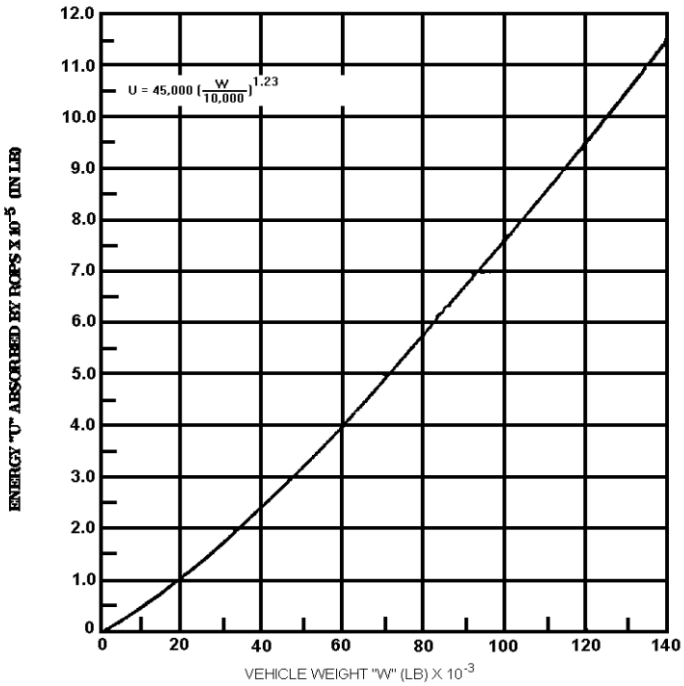

FIGURE V-7
Energy absorbed versus vehicle weight.

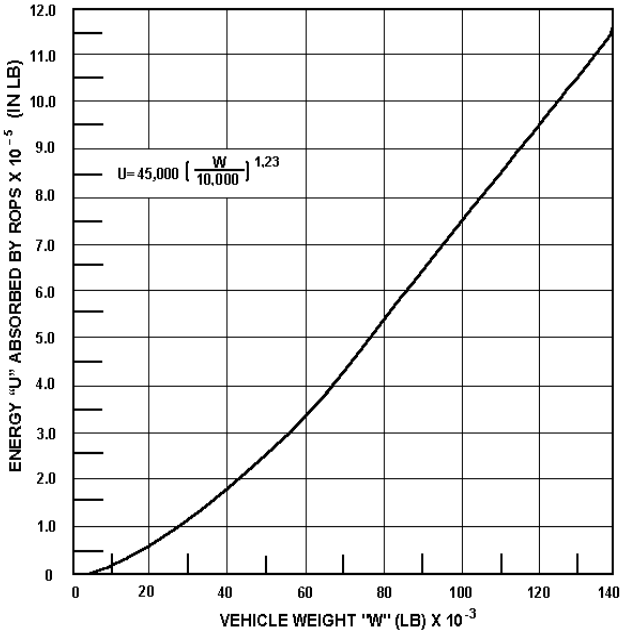

FIGURE V-8
Energy absorbed versus vehicle weight.

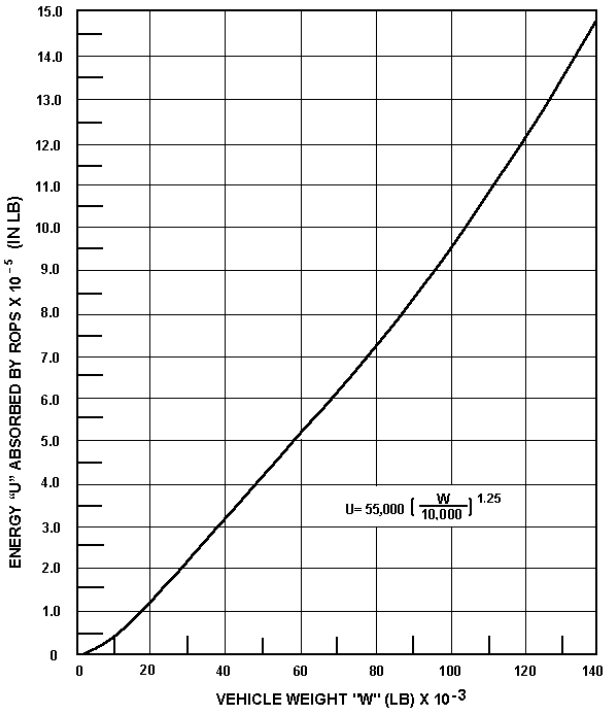

FIGURE V-9
Energy absorbed versus vehicle weight.

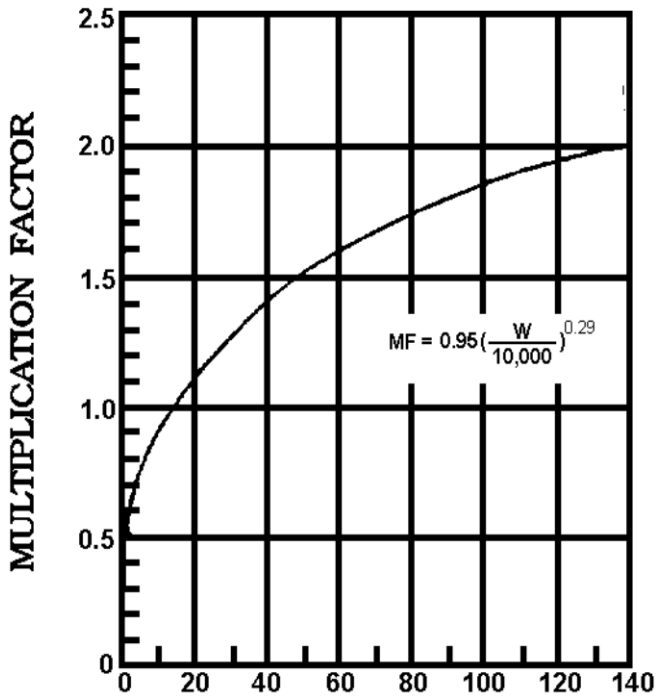

FIGURE V-10
Minimum horizontal load factor for self-propelled scrapers.

(ii) The applied load must attain at least a value which is determined by multiplying the vehicle weight by the corresponding factor shown in Figure V-10 for rubber-tired self-propelled scrapers; in Figure V-11 for rubber-tired front-end loaders and rubber-tired dozers; in Figure V-12 for crawler tractors and crawler-type loaders; and in Figure V-13 for motor graders.

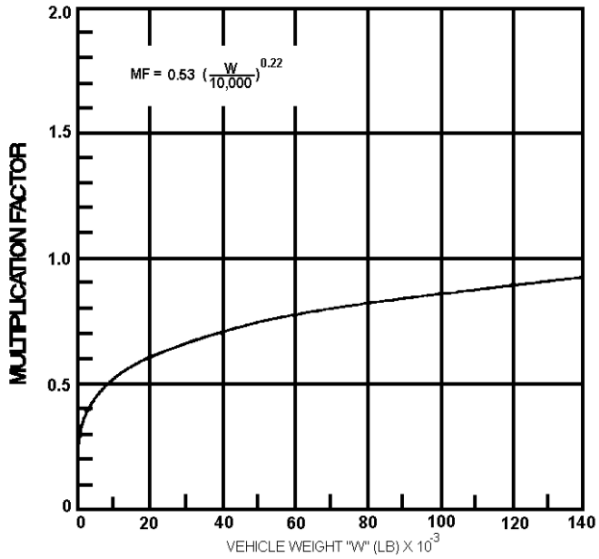

FIGURE V-11
Minimum horizontal load factor for rubber-tired loaders and dozers.

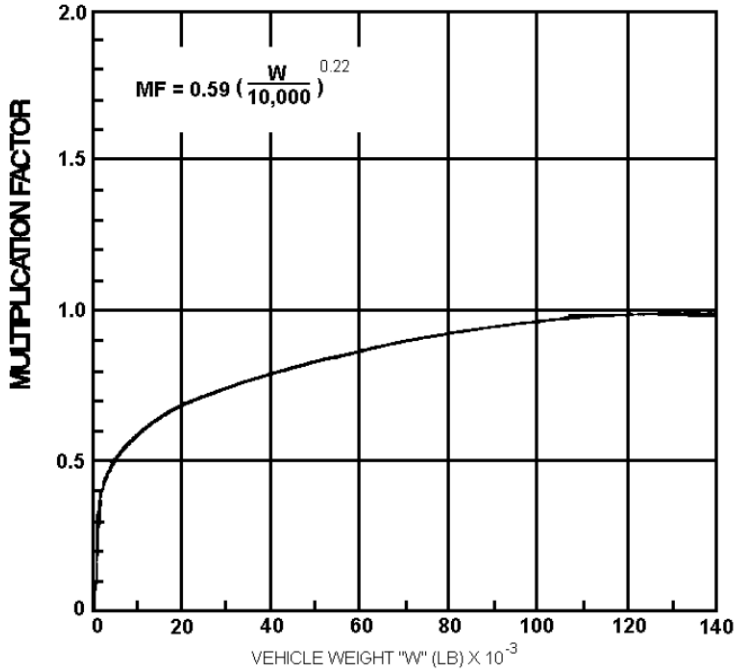

FIGURE V-12
Minimum horizontal load factor for crawler tractors and crawler-type loaders.

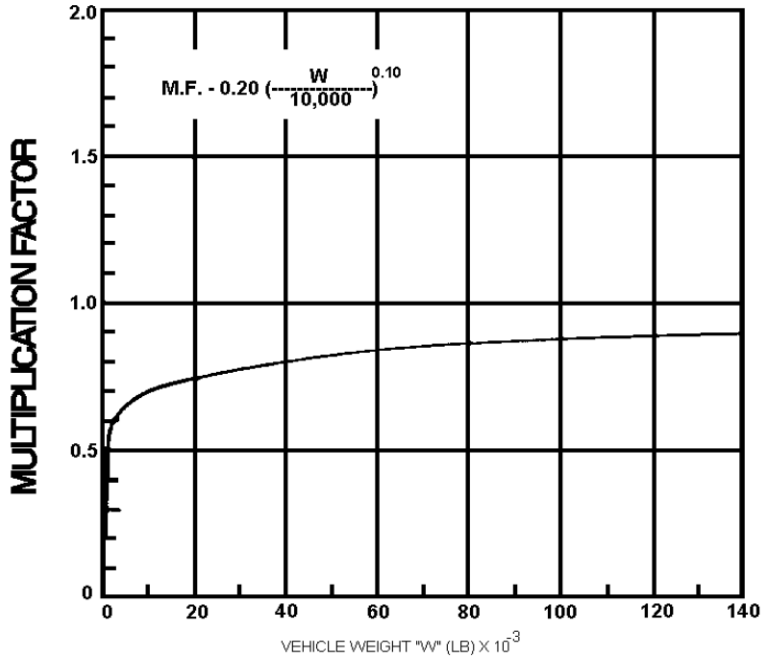

FIGURE V-13
Minimum horizontal load factor for motor graders.

(iii) The load magnitude for purposes of compliance with subsection (6)(b) of this section is equal to the vehicle weight. The test of load magnitude must only be made after the requirements of subdivision (b)(i) of this subsection are met.

(iv) Material used in the ROPS must have the capability of performing at zero degrees Fahrenheit, or exhibit Charpy V notch impact strength of 8 foot-pounds at minus 20° Fahrenheit. This is a standard Charpy specimen as described in American Society of Testing and Materials A 370, Methods and Definitions for Mechanical Testing of Steel Products. The purpose of this requirement is to reduce the tendency of brittle fracture associated with dynamic loading, low temperature operation, and stress raisers which cannot be entirely avoided on welded structures.

(8) **Source of standard**. This standard is derived from, and restates, the following Society of Automotive Engineers Recommended Practices: SAE J320a, Minimum Performance Criteria for Roll-Over Protective Structure for Rubber-Tired, Self-Propelled Scrapers; SAE J394, Minimum Performance Criteria for Roll-Over Protective Structure for Rubber-Tired Front- End Loaders and Rubber-Tired Dozers; SAE J395, Minimum Performance Criteria for Roll-Over Protective Structure for Crawler Tractors and Crawler-Type Loaders; and SAE J396, Minimum Performance Criteria for Roll-Over Protective Structure for Motor Graders. You must resort to these recommended practices in the event that questions of interpretation arise. The recommended practices appear in the 1971 SAE Handbook, which may be examined in each of the district offices of the department of labor and industries.

[Statutory Authority: RCW 49.17.010, .040, .050, and .060. 16-09-085 (Order 15-08), § 296-155-955, filed 04/19/16, effective, 05/20/16. Statutory Authority: Chapter 49.17 RCW. 94-15-096 (Order 94-07), § 296-155-955, filed 7/20/94, effective 9/20/94; Order 74-26, § 296-155-955, filed 5/7/74, effective 6/6/74.]

WAC 296-155-960 Protective frame (ROPS) test procedures and performance requirements for wheel-type agricultural and industrial tractors used in construction.

(1) **Definitions applicable to this section.**

Agricultural tractor. As defined bySAE J333a, Operator Protection for Wheel-Type Agricultural and Industrial Tractors (July 1970), a "wheel-type vehicle of more than 20 engine horsepower designed to furnish the power to pull, carry, propel, or drive implements that are designed for agricultural usage." Since this chapter applies only to construction work, the following definition of "**agricultural tractor**" is adopted for purposes of this part: "**Agricultural tractor**" means a wheel-type vehicle of more than 20 engine horsepower, used in construction work, which is designed to furnish the power to pull, propel, or drive implements. Industrial tractor. That class of wheeled type tractor of more than 20 engine horsepower (other than rubber-tired loaders and dozers described in WAC 296-155-955), used in operations such as landscaping, construction services, loading, digging, grounds keeping, and highway maintenance.

The following symbols, terms, and explanations apply to this section:

E_{is} =Energy input to be absorbed during side loading. E_{is} = 723 + 0.4 W ft.-lb. (E'_{is} = 100 + 0.12 W', m. - kg).

E_{ir} = Energy input to be absorbed during rear loading. E_{ir} = 0.47 W ft. - lb. (E'_{ir} = 0.14 W', m. - kg).

W = Tractor weight as prescribed in WAC 296-155-960 (5)(a) and (5)(c) in lb. (W', kg).

L = Static load, lb. (kg.).

D = Deflection under L, in. (mm.).

L - D = Static load-deflection diagram.

L_m - D_m = Modified static load-deflection diagram (Figure V-20). To account for increase in strength due to increase in strain rate, raise L in plastic range to L x K.

K = Increase in yield strength induced by higher rate of loading (1.3 for hot rolled low carbon steel 1010-1030). Low carbon is preferable; however, if higher carbon or other material is used, K must be determined in the laboratory. Refer to Charles H. Norris, et al., Structural Design for Dynamic Loads (1959), p. 3.

L_{max} = Maximum observed static load.

Load limit = Point on L-D curve where observed static load is 0.8 L_{max} (refer to Figure V-19).

E_u = Strain energy absorbed by the frame, ft.-lb. (m. - kg) area under L_m-D_m curve.

FER = Factor of energy ratio, FER = E_u/E_{is}; also = E_u/E_{ir}.

P_b = Maximum observed force in mounting connection under static load, L, lb. (kg.).

FSB = Design margin for mounting connection FSB = (P_u/P_b)-1.

H = Vertical height of lift of 4,410 lb. (2,000 kg.) weight, in. (H', mm.). The weight must be pulled back so that the height of its center of gravity above the point of impact is defined as follows: H = 4.92 + 0.00190 W or (H' = 125 = 0.107 W') (Figure V-14).

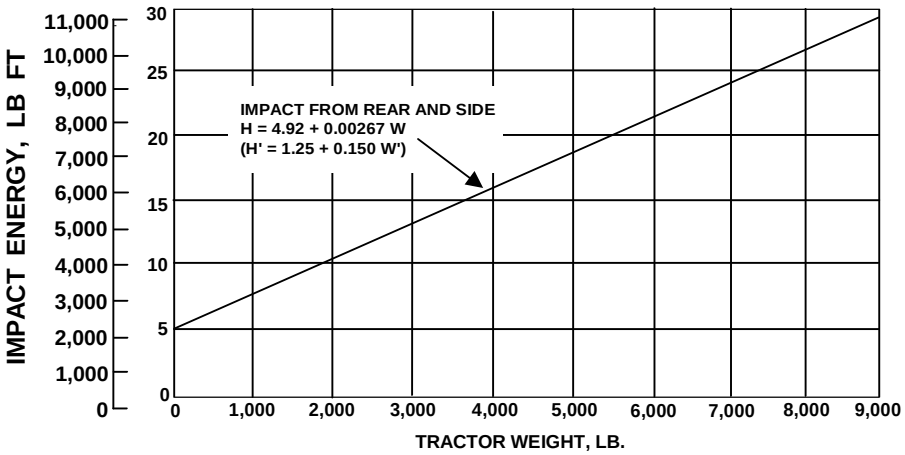

NOTATION OF FORMULAE
H = HEIGHT OF LIFT OF WEIGHT IN IN. (H' IN MM)
W = UNBALLASTED WEIGHT OF TRACTOR IN LB (W' IN KG)

FIGURE V-14
Impact energy and corresponding lift height of 4,410 lb. (2,000 kg.) weight.

Note: The standard in this section is derived from, and restates, Society of Automotive Engineers Standard J334a (July 1970), Protective Frame Test Procedures and Performance Requirements. This standard must be used in the event that questions of interpretation arise. The standard appears in the 1971 SAE Handbook.

(2) **General.**

(a) The purpose of this section is to set forth requirements for frames for the protection of operators of wheel type agricultural and industrial tractors to minimize the possibility of operator injury resulting from accidental upsets during normal operation. With respect to agricultural and industrial tractors, the provisions of WAC 296-155-955 and 296-155-965 for rubber-tired dozers and rubber-tired loaders may be utilized in lieu of the requirements of this section.

(b) The protective frame which is the subject of this standard is a structure mounted to the tractor that extends above the operator's seat and conforms generally to Figure V-15.

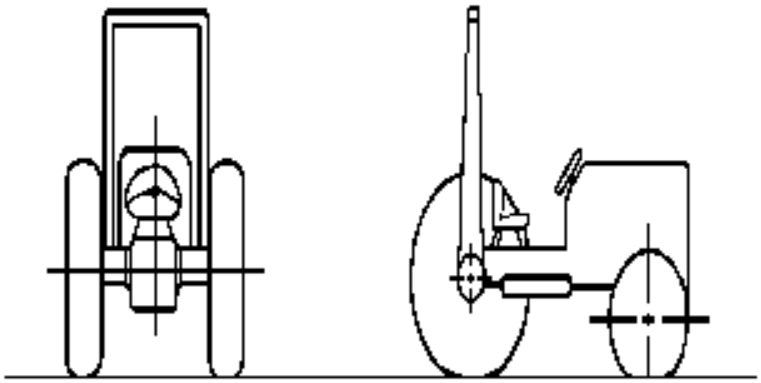

FIGURE V-15
Typical frame configuration.

(c) If an overhead weather shield is attached to the protective frame, it may be in place during tests: *Provided*, That it does not contribute to the strength of the protective frame. If such an overhead weather shield is attached, it must meet the requirements of subsection (10) of this section.

(d) For overhead protection requirements, see WAC 296-155-965.

(e) If protective enclosures are used on wheel-type agricultural and industrial tractors, they must meet the requirements of Society of Automotive Engineers Standard J168 (July 1970), Protective Enclosures, Test Procedures, and performance requirements.

(3) **Applicability**. The requirements of this section apply to wheel-type agricultural tractors use in construction work and to wheel-type industrial tractors used in construction work. See subsection (1) of this section for definitions of agricultural tractors and industrial tractors.

(4) **Performance requirements.**

(a) Either a laboratory test or a field test is required in order to determine the performance requirements set forth in subsection (10) of this section.

(b) A laboratory test may be either static or dynamic. The laboratory test must be under conditions of repeatable and controlled loading in order to permit analysis of the protective frame.

(c) You must conduct a field upset test, if used, under reasonably controlled conditions, both rearward and sideways, to verify the effectiveness of the protective frame under actual dynamic conditions.

(5) **Test procedure-General.**

(a) The tractor used must be the tractor with the greatest weight on which the protective frame is to be used.

(b) You must use a new protective frame and mounting connections of the same design for each test procedure.

(c) You must measure and record instantaneous and permanent frame deformation for each segment of the test.

(d) You must determine dimensions relative to the seat with the seat unloaded and adjusted to its highest and most rearward latched position provided for a seated operator.

(e) If the seat is offset, the frame loading must be on the side with the least space between the centerline of the seat and the upright.

(f) The low temperature impact strength of the material used in the protective structure must be verified by suitable material tests or material certifications in accordance with WAC 296-155-955 (7)(b)(iv).

(6) **Test procedure for vehicle overturn.**

(a) Vehicle weight. The weight of the tractor, for purposes of this section, includes the protective frame, all fuels, and other components required for normal use of the tractor. You must add ballast if necessary to achieve a minimum total weight of 130 lb. (59 kg.) per maximum power takeoff horsepower at rated engine speed. The weight of the front end must be at least 33 lb. (15 kg.) per maximum power takeoff horsepower. In case power takeoff horsepower is unavailable, you must use 95% of net engine flywheel horsepower.

(b) You must test agricultural tractors at the weight set forth in subdivision (a) of this subsection.

(c) You must test industrial tractors with items of integral or mounted equipment and ballast that are sold as standard equipment or approved by the vehicle manufacturer for use with the vehicle where the protective frame is expected to provide protection for the operator with such equipment installed. The total vehicle weight and front end weight as tested must not be less than the weights established in subdivision (a) of this subsection.

(d) You must conduct the test on a dry, firm soil bank as illustrated in Figure V-16. The soil in the impact area must have an average cone index in the 0.6 in. (153 mm.) layer not less than 150 according to American Society of Agricultural Engineers Recommendations ASAE R313, Soil Cone Penetrometer. The path of travel of the vehicle must be 12° ± 2° to the top edge of the bank.

(e) The upper edge of the bank must be equipped with an 18 in. (457 mm.) high ramp as described in Figure V-16 to assist in tipping the vehicle.

(f) The front and rear wheel tread settings, where adjustable, must be at the position nearest to halfway between the minimum and maximum settings obtainable on the vehicle. Where only two settings are obtainable, you must use the minimum setting.

(g) Vehicle overturn test-Sideways and rearward.

(i) You must drive the tractor under its own power along the specified path of travel at a minimum speed of 10 m.p.h. (16 km./hr.) or maximum vehicle speed if under 10 m.p.h. (16 km./hr.) up the ramp as described in subdivision (e) of this subsection to induce sideways overturn.

(ii) Rear upset must be induced by engine power with the tractor operating in gear to obtain 3-5 m.p.h. (4.8-8 km./hr.) at maximum governed engine r.p.m. preferably by driving forward directly up a minimum slope of two vertical to one horizontal. The engine clutch may be used to aid in inducing the upset.

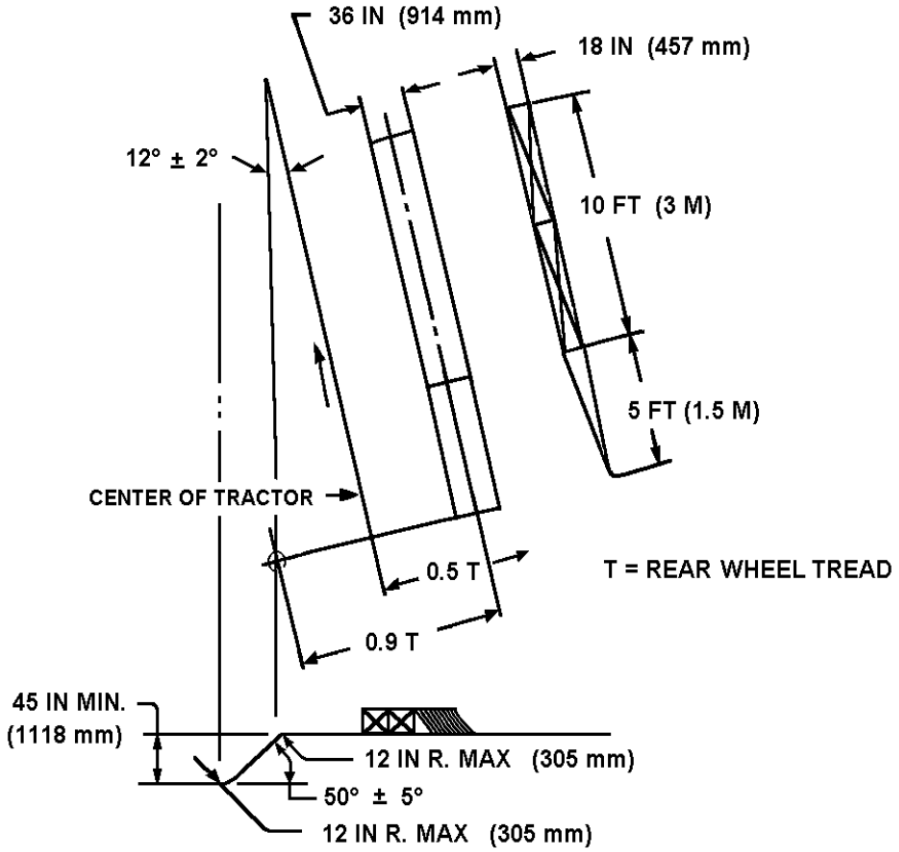

FIGURE V-16

(7) **Other test procedures**. When the field upset test is not used to determine ROPS performance, you must perform either the static test or the dynamic test, contained in subsection (8) or (9) of this section.

(8) **Static test.**

(a) Test conditions.

(i) The laboratory mounting base must include that part of the tractor chassis to which the protective frame is attached including the mounting parts.

(ii) The protective frame must be instrumented with the necessary equipment to obtain the required load deflection data at the locations and directions specified in Figures V-17, V-18, and V-19.

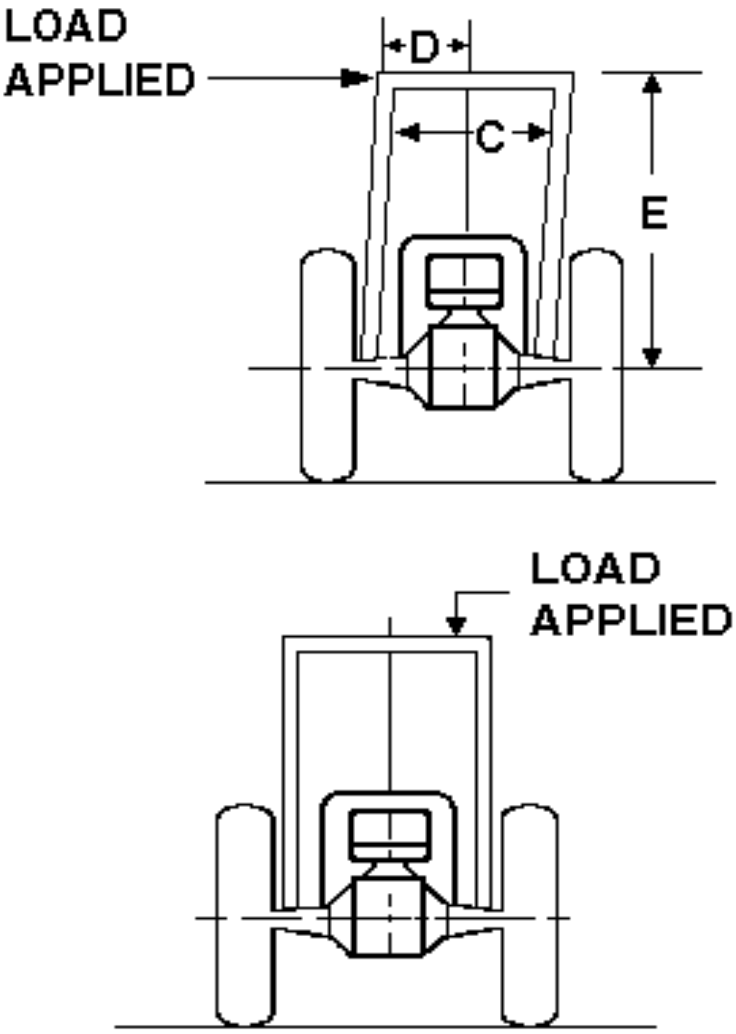

FIGURE V-17
Side load application

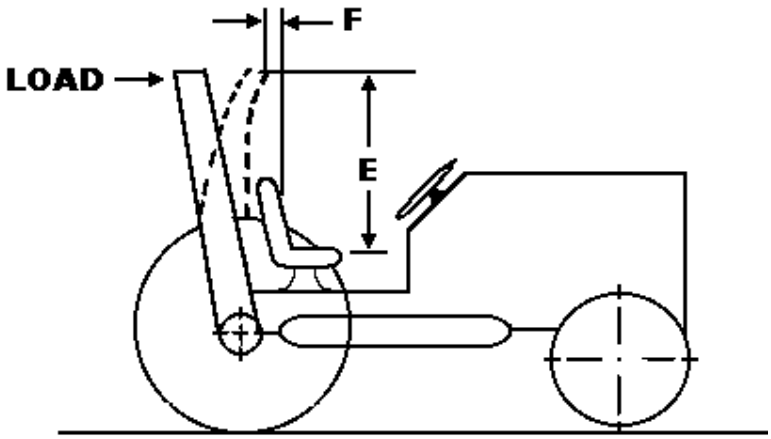

FIGURE V-18
Rear load application.

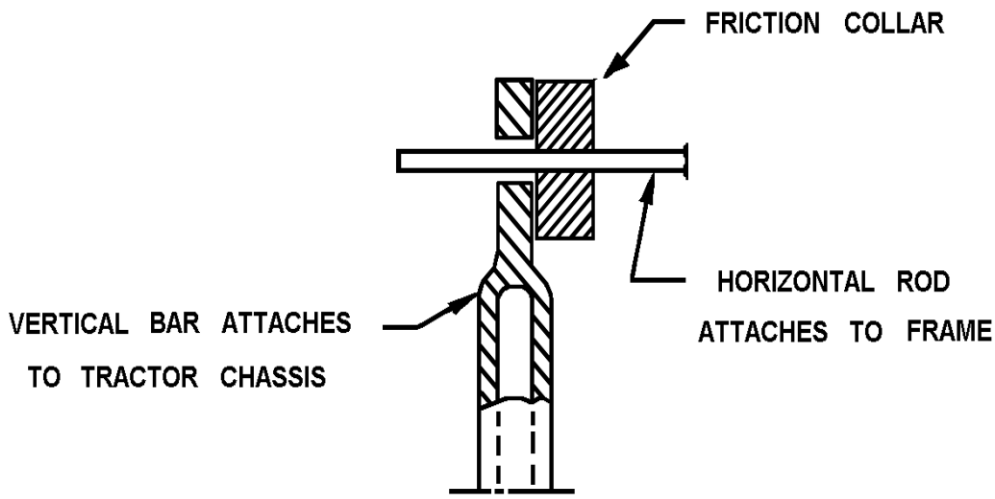

FIGURE V-19
Method of measuring instantaneous deflection.

(iii) The protective frame and mounting connections must be instrumented with the necessary recording equipment to obtain the required load-deflection data to be used in calculating FSB (see subsection (1)(c) of this section). The gauges must be placed on mounting connections before the installation load is applied.

(b) Test procedure.

(i) The side load application must be at the upper extremity of the frame upright at a 90° angle to the centerline of the vehicle. The side load "L" must be applied according to Figure V-17 "L" and "D" must be recorded simultaneously. You must stop the test when:

a. The strain energy absorbed by the frame is equal to the required input energy(E_{is}) or

b. Deflection of the frame exceeds the allowable deflection, or

c. The frame load limit occurs before the allowable deflection is reached in the side load.

(ii) You must construct the L-D diagram, as shown by means of a typical example in Figure V-20, using the data obtained in accordance with item (i) of this subdivision.

(iii) You must construct the modified L_m-D_m diagram according to item (ii) of this subdivision and according to Figure V-21. You must then determine the strain energy absorbed by the frame (E_u).

(iv) You must calculate E_{is}, FER and FSB.

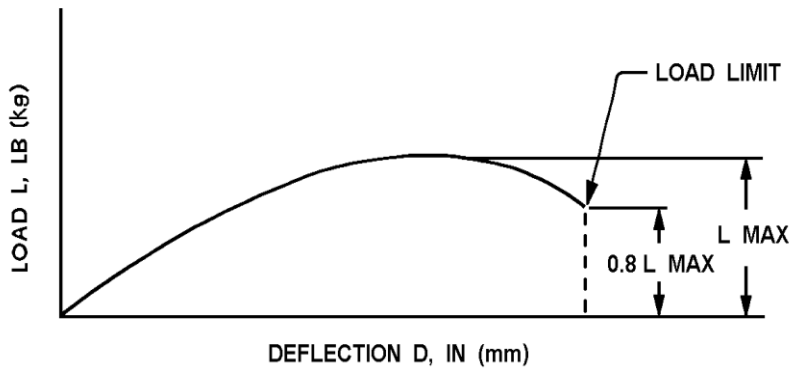

FIGURE V-20
Typical L-D diagram.

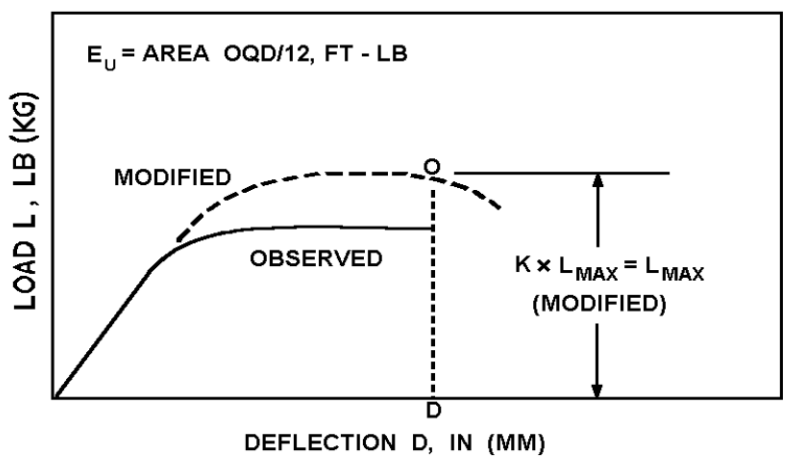

FIGURE V-21
Typical modified L_m-D_m diagram.

(v) You must repeat the test procedure on the same frame utilizing L (rear input; see Figure V-19) and E_{ir}. Rear load application must be uniformly distributed along a maximum projected dimension of 27 in. (686 mm.) and a maximum area of 160 sq. in. (1,032 sq. cm.) normal to the direction of load application. You must apply the load to the upper extremity of the frame at the point which is midway between the centerline of the seat and the inside of the frame upright.

(9) **Dynamic test.**

(a) Test conditions.

(i) The protective frame and tractor must meet the requirements of subsection (6)(b) or (c) of this section, as appropriate.

(ii) The dynamic loading must be produced by use of a 4,410 lb. (2,000 kg.) weight acting as a pendulum. The impact face of the weight must be 27 plus or minus one inch by 27 plus or minus one inch (686 + or - 25 mm.) and must be constructed so that its center of gravity is within one inch. (25.4 mm.) of its geometric center. The weight must be suspended from a pivot point 18-22 ft. (5.5-6.7 m.) above the point of impact on the frame and must be conveniently and safely adjustable for height. (See Figure V-22.)

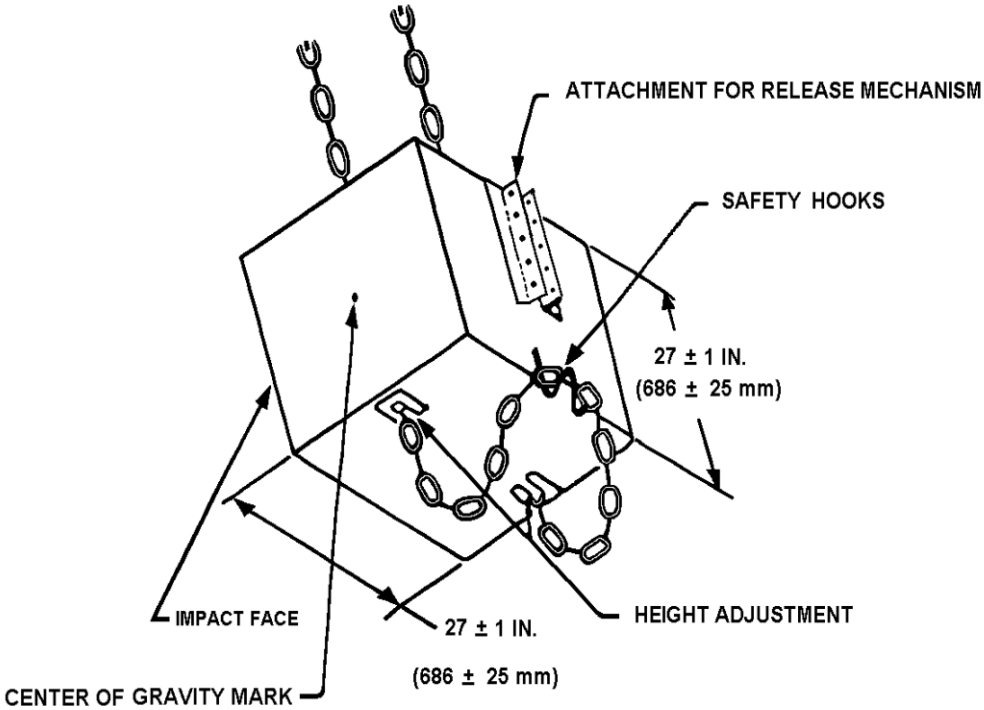

FIGURE V-22
Pendulum.

(iii) For each phase of testing, the tractor you must restrain from moving when the dynamic load is applied. The restraining members must be of 0.5-0.63 in. (12.5-16 mm.) steel cable and points of attaching restraining members must be located an appropriate distance behind the rear axle and in front of the front axle to provide a 15°-30° angle between a restraining cable and the horizontal. The restraining member must either be in the plane in which the center gravity of the pendulum will swing or more than one restraining cable must give a resultant force in this plane. (See Figure V-23.)

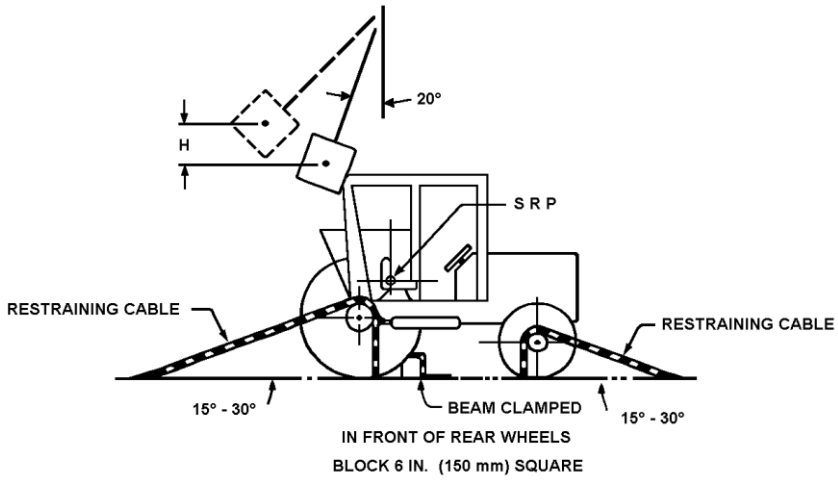

FIGURE V-23
Method of impact from rear.

(iv) The wheel tread setting must comply with the requirements of subsection (6)(f) of this section. The tires must have no liquid ballast and must be inflated to the maximum operating pressure recommended by the tire manufacturer. With specified tire inflation, the restraining cables must be tightened to provide tire deflection of 6-8 % of nominal tire section width. After the vehicle is properly restrained, a wooden beam 6 x 6 in. (15 x 15 cm.) must be driven tightly against the appropriate wheels and clamped. For the test to the side, an additional wooden beam must be placed as a prop against the wheel nearest the operator's station and must be secured to the floor so that it is held tightly against the wheel rim during impact. The length of this beam must be chosen so that when it is positioned against the wheel rim it is at an angle of 25 -40° to the horizontal. It must have a length 20-25 times its depth and a width two to 3 times its depth. (See Figures V-23 and V-24.)

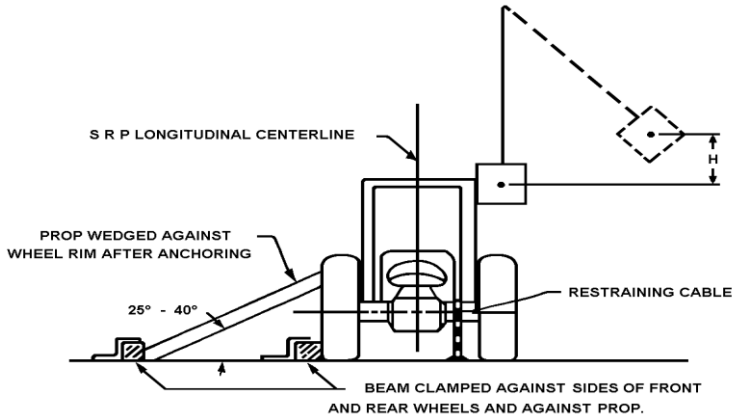

FIGURE V-24
Method of impact from side.

(v) You must provide means indicating the maximum instantaneous deflection along the line of impact. A simple friction device is illustrated in Figure V-24.

(vi) No repair or adjustments may be carried out during the test.

(vii) If any cables, props, or blocking shift or break during the test, you must repeat the test.

(b) Test procedure.

(i) General. You must evaluate the frame by imposing dynamic loading to rear followed by a load to the side on the same frame. The pendulum dropped from the height (see definition "H" in subsection (1)(c) of this section) imposes the dynamic load. You must select the position of the pendulum so that the initial point of impact on the frame is in line with the arc of travel of the center of gravity of the pendulum. You should use a quick release mechanism but, if used, it must not influence the attitude of the block.

(ii) Impact at rear. You must properly restrain the tractor according to subdivisions (a)(iii) and (iv) of this section. You must position the tractor with respect to the pivot point of the pendulum such that the pendulum is 20° from the vertical prior to impact, as shown in Figure V-23. The impact must be applied to the upper extremity of the frame at the point which is midway between the centerline of the seat and the inside of the frame upright of a new frame.

(iii) Impact at side. The block and restraining must conform to subdivisions (a)(iii) and (iv) of this subsection. The point of impact must be that structural member of the protective frame likely to hit the ground first in a sideways accidental upset. The side impact must be applied to the side opposite that used for rear impact.

(10) **Performance requirements.**

(a) General.

(i) The frame, overhead weather shield, fenders, or other parts in the operator area may be deformed but must not shatter or leave sharp edges exposed to the operator, or violate dimensions as shown in Figures V-17 and V-18 as follows:

D = 2 in. (51 mm.) inside of frame upright to vertical centerline of seat.
E = 30 in. (762 mm.).
F = Not less than 0 in. and not more than 12 in. (305 mm.), measured at centerline front of seat backrest to crossbar along the line of load application as shown in Figure V-17.
G = 24 in. (610 mm.).

(ii) The material and design combination used in the protective structure must be such that the structure can meet all prescribed performance tests at zero degrees Fahrenheit in accordance with WAC 296-155-955 (7)(b)(iv).

(b) Vehicle overturn performance requirements. You must meet the requirements of this subsection (10) in both side and rear overturns.

(c) Static test performance requirements. Design factors must be incorporated in each design to withstand an overturn test as prescribed in this subsection (10). The structural requirements will be generally met if FER is greater than one and FSB is greater than K-1 in both side and rear loadings.

(d) Dynamic test performance requirements. Design factors must be incorporated in each design to withstand the overturn test prescribed in this subsection (10). The structural requirements will be generally met if the dimensions in this subsection (10) are adhered to in both side and rear loads.

[Statutory Authority: RCW 49.17.010, .040, .050, and .060. 16-09-085 (Order 15-08), § 296-155-960, filed 04/19/16, effective, 05/20/16. Statutory Authority: RCW 49.17.010, .040, .050. 02-12-098 (Order 00-20), § 296-155-960, filed 06/05/02, effective 08/01/02. Order 74-26, § 296-155-960, filed 5/7/74, effective 6/6/74.]

WAC 296-155-965 Overhead protection for operators of agricultural and industrial tractors.

(1) **General.**

(a) Purpose. When overhead protection is provided on wheel-type agricultural and industrial tractors, the overhead protection must be designed and installed according to the requirements contained in this section. The provisions of WAC 296-155-955 for rubber-tired dozers and rubber-tired loaders may be used in lieu of the standards contained in this section. The purpose of the standard is to minimize the possibility of operator injury resulting from overhead hazards such as flying and falling objects, and at the same time to minimize the possibility of operator injury from the cover itself in the event of accidental upset.

(b) Applicability. This section applies to wheel-type agricultural tractors used in construction work and to wheel-type industrial tractors used in construction work. See WAC 296-155-960 (1) and (3). In the case of machines to which WAC 296-155-625 (relating to site clearing) also applies, the overhead protection may be either the type of protection provided in WAC 296-155-625 or the type of protection provided by this section.

(2) **Overhead protection**. When overhead protection is installed on wheel-type agricultural or industrial tractors used in construction work, it must meet the requirements of this subsection. The overhead protection may be constructed of a solid material. If grid or mesh is used, the largest permissible opening must be such that the maximum circle which can be inscribed between the elements of the grid or mesh is 1.5 in. (38 mm.) in diameter. The overhead protection must not be installed in such a way as to become a hazard in the case of upset.

(3) **Test procedures-General.**

(a) The requirements of WAC 296-155-960 (5), (6) and (7) must be met.

(b) Static and dynamic rear load application must be uniformly distributed along a maximum projected dimension of 27 in. (686 mm.) and a maximum area of 160 in.^{2} (1,032 cm.^{2}) normal direction of load application. The load must be applied to the upper extremity of the frame at the point which is midway between the centerline of the seat and the inside of the frame upright.

(c) The static and dynamic side load application must be uniformly distributed along a maximum projected dimension of 27 in. (686 mm.) and a maximum area of 160 in.^{2} (1,032 cm.^{2}) normal to the direction of load application. The direction of load application is the same as in WAC 296-155-960 (8) and (9). To simulate the characteristics of the structure during an upset, the center of load application may be located from a point 24 in. (610 mm.) (K) forward to 12 in. (305 mm.) (K) forward to 12 in. (305 mm.) (L) rearward of the front of the seat backrest to best utilize the structural strength. See Figure V-25.

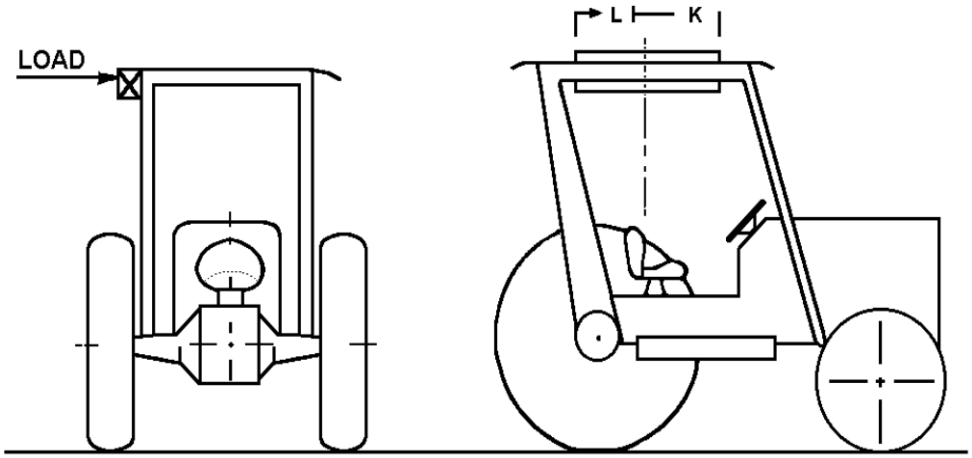

FIGURE V-25
Location for side load.

(4) **Drop test procedures.**

(a) You must subject the same frame to the drop test following either the static or dynamic test.

(b) A solid steel sphere or material of equivalent spherical dimension weighing 100 lb.(45.4 kg.) must be dropped once from a height 10 ft. (3,048 mm.) above the overhead cover.

(c) The point of impact must be on the overhead cover at a point within the zone of protection as shown in Figure V-26, which is furthest removed from major structural members.

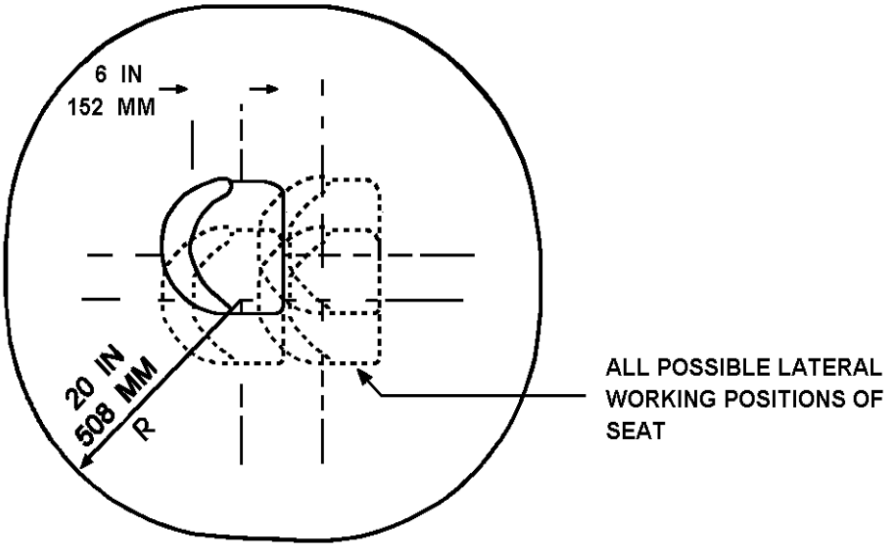

FIGURE V-26

Zone of protection for drop test.

(5) **Crush test procedure**.

(a) You must subject the same frame to the crush test following the drop test and static or dynamic test.

(b) The test load must be applied as shown in Figure V-27 with the seat positioned as specified in WAC 296-155-960 (5)(d). Loading cylinders must be pivotally mounted at both ends. Loads applied by each cylinder must be equal within 2%, and the sum of the loads of the two cylinders must be two times the tractor weight as set forth in WAC 296-155-960 (6)(a). The maximum width of the beam illustrated in Figure V-27 must be 6 in. (152 mm.).

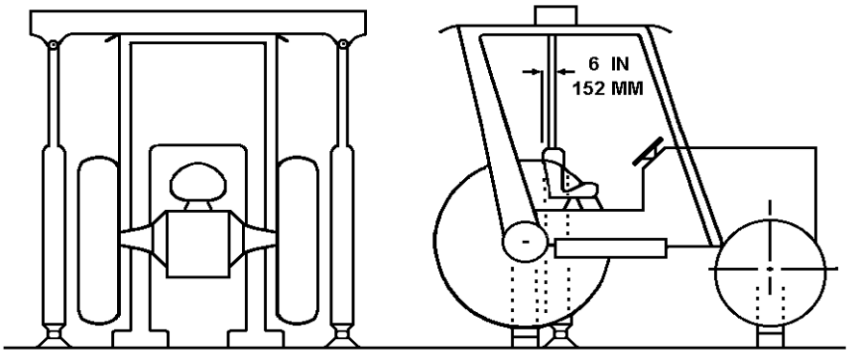

FIGURE V-27
Method of load application for crush test.

(6) **Performance requirements.**

(a) General. You must meet the performance requirements set forth in WAC 296-155-960 (10)(b), (c) and (d).

(b) Drop test performance requirements.

(i) Instantaneous deformation due to impact of the sphere must not enter the protected zone as illustrated in Figures V-25, V-26, and V-28.

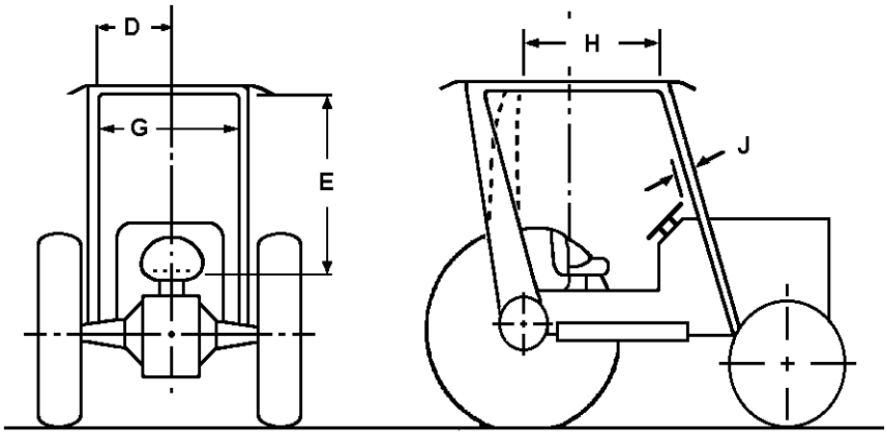

FIGURE V-28
Protected zone during crush and drop tests.

(ii) In addition to the dimensions set forth in WAC 296-155-960(10)(a)(i) the following dimensions apply to Figure V-28:

H = 17.5 in. (444 mm.).
J = 2 in. (50.8 mm.) measured from the outer periphery of the steering wheel.

(c) Crush test performance requirements. You must not violate the protected zone as described in Figure V-28.

(7) **Source of standard**. This standard is derived from, and restates, the portions of Society of Automotive Engineers Standard J167 which pertain to overhead protection requirements. The full title of the SAE standard is: Protective Frame with Overhead Protection-Test Procedures and performance requirements. You must resort to the SAE standard in the event that questions of interpretation arise. The SAE standard appears in the 1971 SAE Handbook.

[Statutory Authority: RCW 49.17.010, .040, .050, and .060. 16-09-085 (Order 15-08), § 296-155-965, filed 04/19/16, effective, 05/20/16. Order 74-26, § 296-155-965, filed 5/7/74, effective 6/6/74.]