Washington State Department of
Labor & Industries
Division of Occupational Safety and Health

Safety Standards for Possession, Handling and Use of Explosives

Chapter 296-52 WAC

May 2014 Edition

Division of Occupational Safety and Health
www.Lni.wa.gov/Safety **1-800-423-7233**

F414-038-000

Chapter 296-52 WAC
Safety Standards for Possession, Handling and Use of Explosives
(Form Number F414-038-000)

LAST UPDATED 05/01/2014

This book contains rules for Safety Standards for possession, handling and use of explosives, as adopted under the Washington Industrial Safety and Health Act of 1973 (Chapter 49.17 RCW).

DATE: The new issue date of this book is May 2014. A brief promulgation history, set within brackets at the end of each section, gives statutory authority, administrative order of promulgation, and date of adoption of filing.

TO RECEIVE E-MAIL UPDATES:

- Sign up for our Listserv at www.Lni.wa.gov/main/Listservs/SafetyStandards.asp

TO PRINT YOUR OWN PAPER COPY OR TO VIEW THE RULE ONLINE:

- Go to: http://www.lni.wa.gov/Safety/Rules/Find/

TO REQUEST A SAFETY CD THAT INCLUDES ALL OF OUR RULES:

- E-mail your CD request to: RulesRequests@Lni.wa.gov

TO REQUEST A HARD COPY:

- E-Mail your mailing address and the book request to: RulesRequests@Lni.wa.gov

DOSH CONTACT INFORMATION:

- Physical address: 7273 Linderson Way, Tumwater, WA 98501-5414, located off I-5 Exit 101 south of Tumwater.
- Mailing address: DOSH Standards and Information, PO Box 44810, Olympia, WA 98504-4810.
- Information phone number is 1-800-4BESAFE

Also available on the WISHA web site:

- WISHA Core Rules
- Other General WISHA Rules
- Industry and Task-Specific Rules
- Proposed Rules and Hearings
- Newly Adopted Rules and New Rule Information
- WISHA Regional Directives (WRDs)
- WISHA Interim Operations and Interpretive Memoranda (WHM)
- Memoranda of Understanding (MOU)

Chapter 296-52 WAC
SAFETY STANDARDS FOR POSSESSION, HANDLING, AND USE OF EXPLOSIVES

Contents at a Glance

Sections

PART A
PURPOSE, SCOPE, AND APPLICATION
WAC 296-52-60005 Purpose and Scope **through** WAC 296-52-60130 Definitions

PART B
EXPLOSIVE LICENSING
WAC 296-52-61005 Types of explosive licenses **through** WAC 296-52-66060 Reporting changes in conditions

PART C
USE OF EXPLOSIVE MATERIALS
WAC 296-52-67010 Blaster in charge responsibilities **through**
WAC 296-52-67245 High speed tunneling: Central primer house

PART D
TRANSPORTATION OF EXPLOSIVE MATERIALS
WAC 296-52-68010 Public highways **through** WAC 296-52-68085 Underground transportation

PART E
STORAGE OF EXPLOSIVE MATERIALS
WAC 296-52-69005 Detonators **through**
WAC 296-52-69130 Table of distances for the storage of display fireworks (except bulk salutes)

PART F
MAGAZINE CONSTRUCTION
WAC 296-52-700 Magazine construction **through** WAC 296-52-70085 Lighting

PART G
MISCELLANEOUS
WAC 296-52-710 Exemptions **through**
WAC 296-52-725 Appendix B, sample format for a blast record, non-mandatory

PART H
AVALANCHE CONTROL
WAC 296-52-800 Avalanche control **through** WAC 296-52-809 Retrieving misfired explosives (duds)

PART A
PURPOSE, SCOPE, AND APPLICATION

WAC **Page**

WAC 296-52-60005 Implementation of the Washington State Explosives Act. 1
WAC 296-52-60010 Purpose and intent. 1
WAC 296-52-60015 Coverage. 1
WAC 296-52-60020 Exemptions. 1
WAC 296-52-60030 The department. 3
WAC 296-52-60035 Other government entities. 3
WAC 296-52-60045 Responsibility to obtain an explosives license. 4
WAC 296-52-60050 Unlicensed activities. 4
WAC 296-52-60055 Drug use. 4
WAC 296-52-60060 License revocation, suspension, and surrender. 4
WAC 296-52-60065 Violation appeals. 4
WAC 296-52-60075 Hazards to life. 4
WAC 296-52-60080 Entry and access to explosive areas. 5
WAC 296-52-60085 Abandonment of explosives. 5
WAC 296-52-60090 Firearms. 5
WAC 296-52-60095 Fire. 5
WAC 296-52-60100 Daylight blasting. 5
WAC 296-52-60105 Notification--Blasting near utilities. 5
WAC 296-52-60115 Explosive industry employers. 6
WAC 296-52-60120 Variance from a chapter requirement. 6
WAC 296-52-60125 Using standards from national organizations and federal agencies. 6
WAC 296-52-60130 Definitions. 6

WAC 296-52-60005 Implementation of the Washington State Explosives Act.

This chapter places into effect the Washington State Explosives Act (chapter 70.74 RCW (Revised Code of Washington)).

WAC 296-52-60010 Purpose and intent.

The purpose of this chapter is to define minimum requirements for the prevention and control of hazards related to the possession, handling, and use of explosives in order to:

- Protect the safety and health of the general public
- Protect the safety and health of explosive industry employees covered under the Washington Industrial Safety and Health Act (chapter 49.17 RCW)
- Develop, support, and maintain safe and healthy use of explosives in Washington state.

WAC 296-52-60015 Coverage.

This chapter applies to:

- Any person, partnership, company, corporation, government agency, or other entity
- All aspects of explosives, blasting agents, and pyrotechnics including:
  - Manufacture
  - Sale
  - Possession
  - Purchase
  - Use
  - Storage
  - Transportation
  - Avalanche control.
- Display fireworks.

Note: Class A and B display fireworks are partially exempt from the requirements of this chapter (see WAC 296-52-60020(5)).

WAC 296-52-60020 Exemptions.

(1) **The following are exempt from this chapter:**

(a) Explosives or blasting agents transported by railroad, water, highway, or air under the jurisdiction of the Federal Department of Transportation (DOT), the Washington state utilities and transportation commission, and the Washington state patrol.

(b) Laboratories of schools, colleges, and similar institutions if confined to the purpose of instruction or research and if the quantity does not exceed one pound.

(c) Explosives in the forms prescribed by the official United States Pharmacopoeia.

WAC 296-52-60020 (Cont.)

(d) The transportation, storage, and use of explosives or blasting agents in the normal and emergency operations of:

- The United States agencies and departments including the regular United States military departments on military reservations
- Arsenals, navy yards, depots, or other establishments owned by, operated by, or on behalf of, the United States
- The duly authorized militia of any state
- The emergency operations of any state department or agency any, police, or any municipality or county

(e) A hazardous devices technician when they are carrying out:

- Normal and emergency operations
- Handling evidence
- Operating and maintaining a specially designed emergency response vehicle that carries no more than 10 pounds of explosive materials
- When conducting training and whose employer possesses the minimum safety equipment prescribed by the Federal Bureau of Investigation (FBI) for hazardous devices work

Note: A hazardous devices technician is a person who is a graduate of the FBI Hazardous Devices School and who is employed by a state, county, or municipality.

(f) The importation, sale, possession, and use of fireworks, signaling devices, flares, fuses, and torpedoes.

(g) Reserved.

(h) Any violation under this chapter if any existing ordinance of any city, municipality, or county is more stringent.

(i) The transportation and storage of explosive actuated tactical devices, including noise and flash diversionary devices, by local law enforcement tactical response teams and officers in law enforcement department-issued vehicles designated for use by tactical response teams and officers, provided the explosive devices are stored and secured in compliance with regulations and rulings adopted by the federal bureau of alcohol. tobacco, firearms, and explosives.

(2) **Noncommercial military explosives.** Storage, handling, and use of noncommercial military explosives are exempt from this chapter while they are under the control of the United States government or military authorities.

(3) **Import, sale, possession, or use of:**

- Consumer fireworks
- Signaling devices
- Flares
- Fuses
- Torpedoes

(4) **Consumer fireworks.** Fireworks classified as Division 1.4 explosives by U.S. DOT and regulated through the State fireworks law (chapter 70.77 RCW) and the fireworks administrative code (chapter 212-17 WAC) by the Washington state fire marshal.

Note: Consumer fireworks are classified as fireworks UN0336 and UN0337 by U.S. DOT (49 CFR 72.101).

(5) **Partial exemption—Division 1.1, 1.2, or 1.3 display fireworks.** Display fireworks are fireworks classified as Division 1.1, 1.2, or 1.3 explosives by U.S. DOT. Users of Division 1.1, 1.2, or 1.3 display fireworks must comply with all storage or storage related requirements (for example, licensing, construction, and use) of this chapter.

WAC 296-52-60020 (Cont.)

Note: Display fireworks are classified as fireworks UN0333, UN0334, or UN0335 by U.S. DOT (49 CFR 172.101).

(6) **Conditional exemption small arms explosive materials.** Public consumers possessing and using:

- Black powder, under five pounds
- Smokeless powder, under fifty pounds
- Small arms ammunition
- Small arms ammunition primers
  - Unless these materials are possessed or used illegally or for a purpose inconsistent with small arms use.

STATE AND LOCAL GOVERNMENT JURISDICTIONS

WAC 296-52-60030 The department.

(1) Administration and enforcement. The director of labor and industries administers and enforces all activities governed by the Washington State Explosives Act through chapter 296-52 WAC using the full resources of the department.

(2) **Authority to enter, inspect, and issue penalties.** The department may enter and inspect any location, facility, or equipment and issue penalties for any violation whenever the director has reasonable cause to think there are:

- Explosives
- Blasting agents
- Explosive materials

(3) **Unlicensed activities.** Whenever the director requests an unlicensed person to surrender explosives, improvised devices, or their component parts, he may request the attorney general to apply to the county superior court in which the illegal practice was carried out for a temporary restraining order or other appropriate assistance.

WAC 296-52-60035 Other government entities.

(1) **Law enforcement authorities.** The department:

- Acknowledges the legal obligation of other law enforcement agencies to enforce specific aspects or sections of the Washington State Explosives Act under local ordinances and with joint and shared authority granted by RCW 70.74.201
- Will cooperate with all other law enforcement agencies in carrying out the intent of the Washington State Explosives Act and chapter 296-52 WAC

(2) **Local government authorities.**

(a) This chapter does not prevent local jurisdictions from adopting and administering local regulations relating to explosives. Examples of local jurisdictions/regulations include:

- City or county government explosive ordinances
- Other government authorities such as the Washington utilities and transportation commission, the Washington state patrol, or Washington administrative codes.

(b) Local regulations must not diminish or replace any regulation of this chapter.

Note: A nonmandatory sample-blasting ordinance for local jurisdictions is included in Appendix B.

BASIC LEGAL OBLIGATIONS

WAC 296-52-60045 Responsibility to obtain an explosives license.

Anyone manufacturing, purchasing, selling, offering for sale, using, possessing, transporting, or storing any explosive, improvised device, or components intended to be assembled into an explosive or improvised device must have a valid license issued by the department.

WAC 296-52-60050 Unlicensed activities.

Upon notice from the department or any law enforcement agency having jurisdiction, an unlicensed person manufacturing, offering for sale, selling, possessing, purchasing, using, storing, or transporting any explosives, improvised device, or components of explosives or improvised devices must immediately surrender those explosive materials to the department or the law enforcement agency having jurisdiction.

WAC 296-52-60055 Drug use.

Explosives must not be handled by anyone under the influence of:

- Alcohol
- Narcotics
- Prescription drugs and/or narcotics that endanger the worker or others
- Other dangerous drugs

Note: This chapter does not apply to persons taking prescription drugs and/or narcotics as directed by a physician provided their use will not endanger the blaster, workers, or any other people.

WAC 296-52-60060 License revocation, suspension, and surrender.

(1) **Revocation.** The department:

(a) Will revoke and not renew the manufacturer, dealer, purchaser, blaster, or storage license of any person as a result of a disqualifying condition identified in WAC 296-52-61040, Applicant disqualifications.

(b) May revoke the license of any person who has:

(i) Repeatedly violated the requirements of this chapter

(ii) Had a license suspended twice under this chapter

(2) **Suspension.** The department may suspend the license of any person for a period up to 6 months for any violation of this chapter.

(3) **Surrender.** Revoked or suspended licenses must be surrendered immediately to the department after the chapter violators have been notified.

WAC 296-52-60065 Violation appeals.

An appeal of a citation, issued for a violation of a requirement of this chapter, which results in a license suspension or revocation (WAC 296-52-60060) may be filed with the department.

BASIC HAZARD PRECAUTIONS

WAC 296-52-60075 Hazards to life.

Explosives or blasting agents must not be stored, handled, or transported if they could create a hazard to life.

WAC 296-52-60080 Entry and access to explosive areas.

Only the owner, owner's authorized agent, the director, or law enforcement officer(s) acting in an official capacity may enter into an:

- Explosives manufacturing building
- Magazine
- Vehicle
- Other common carrier containing explosives.

WAC 296-52-60085 Abandonment of explosives.

Explosives or improvised devices must not be abandoned.

WAC 296-52-60090 Firearms.

Firearms cannot be discharged at or against any:

(1) Magazine.

(2) Explosives manufacturing building.

(3) Explosives material.

WAC 296-52-60095 Fire.

(1) **Magazines/buildings.** Flame or flame producing devices must not be ignited within 50 feet of any magazine or explosives manufacturing building.

(2) **Explosives handling.**

(a) All sources of fire or flame, including smoking and matches, are prohibited within 100 feet of the blast site while explosives are being handled or used.

(b) Explosives must not be handled near:

(i) Open flames

(ii) Uncontrolled sparks

or

(iii) Energized electric circuits

(3) **Fire incident precautions.** In the event of a fire:

(a) All employees must be removed to a safe area

(b) The fire area must be guarded against intruders

(c) The fire must not be fought where there is danger of contact with explosives.

WAC 296-52-60100 Daylight blasting.

Blasting operations must be conducted during daylight hours whenever possible.

WAC 296-52-60105 Notification--Blasting near utilities.

Whenever blasting is being conducted in the vicinity of gas, electric, water, fire alarm, telephone, telegraph, and steam utilities, the blaster in charge must notify appropriate utility representatives:

(1) At least 24 hours in advance of blasting.

(2) Of the specific location and intended time of blasting.

(3) To confirm the verbal notice with a written notice.

MISCELLANEOUS

WAC 296-52-60115 Explosive industry employers.

In addition to the requirements of this chapter:

(1) Explosive industry employers must comply with other applicable WISHA requirements:

- Chapter 296-800 WAC, Safety and health core rules
- Chapter 296-24 WAC, General safety and health standards
- Chapter 296-62 WAC, General occupational health standards
- Chapter 296-155 WAC, Safety standards for construction
- Other industry specific standards that may apply

(2) Manufacturers of explosives or pyrotechnics must comply with WISHA safety standards for process safety management of highly hazardous chemicals, chapter 296-67 WAC.

WAC 296-52-60120 Variance from a chapter requirement.

The director may approve a variance from a chapter requirement pursuant to RCW 49.17.080 or 49.17.090:

- After an application for a variance is received,
- After the department has conducted an investigation,
- When conditions exist that make the requirement impractical to use, and
- When equivalent means of protection are provided.

Note: Variance application forms may be obtained from and should be submitted to: Department of Labor and Industries, WISHA Services Division, Post Office Box 44650, Olympia, WA 98504-4650.

WAC 296-52-60125 Using standards from national organizations and federal agencies.

To be in compliance with WISHA rules, the information provided in this section must be followed when safety and health standards from national organizations and federal agencies are referenced in WISHA rules.

- The edition of the standard specified in the WISHA rule must be used.
- Any edition published after the edition specified in the WISHA rule may be used.

Note: The federal and national consensus standards referenced in the WISHA rules are available through the issuing organization and the local or state library.

WAC 296-52-60130 Definitions.

Aerial blaster in charge means a person who:

- Is fully qualified, by means of training and experience in explosives use
- Is adequately trained, experienced, and capable of recognizing conditions throughout the blast area
- Is in charge of:
  - The blast process
  - All aspects of explosives and blasting agent storage, handling, and use as recommended by the manufacturer and as required by this chapter.
- Is in a position of authority:
  - To take prompt corrective action in all areas of the blast operation
  - Over all other blasters at the blast sight
- Has a minimum of 5 missions under the supervision of a licensed aerial blaster in charge
- Successfully completes a written exam for aerial blaster in charge.

WAC 296-52-60130 (Cont.)

Alien means any person who is not a citizen or national of the United States.

American Table of Distances means the American Table of Distances for Storage of Explosives as revised and approved by Institute of the Makers of Explosives (IME).

Approved storage facility means a facility for the storage of explosive materials which is in compliance with the following chapter:

- Storage licensing (WAC 296-52-660)
- Storage of explosive materials (WAC 296-52-690)
- Magazine construction (WAC 296-52-700).

ATF means the Bureau of Alcohol, Tobacco, Firearms and Explosives.

Attended, as attending explosives, means the physical presence of an authorized person within the field of vision of explosives. The said attendant shall be awake, alert, and not engage in activities which may divert their attention so that in case of an emergency the attendant can get to the explosives quickly and without interference, except for brief periods of necessary absence, during which absence simple theft of explosives is not ordinarily possible.

Authorized, approved, or approval means authorized, approved, or approval by:

- The department
- Any other approving agency
- An individual as specified in this chapter.

Authorized agent means a person delegated by a licensed purchaser, who possesses a basic knowledge of explosives handling safety, to order and receive explosives on the purchaser's behalf.

Authorized agent list means a current list of agents the purchaser has authorized to order or receive explosives on their behalf.

Authorized person means a person approved or assigned by an employer, owner, or licensee to perform a specific type of duty or be at a specific location at the job site.

Avalanche means the sliding or falling of a large amount of snow down a steep slope which has a destructive force due to its mass.

Avalanche control pack means a specially designed and constructed pack for carrying explosives.

Avalanche control route means a route or specific path which is used by an authorized person in order to control the occurrence of avalanches.

Avalauncher means a device like a cannon which is used for avalanche control blasting. It has a rotating base calibrated for pointing and the barrel is mounted on an elevating mechanism. It uses a compressed gas to propel a projectile containing an explosive charge and detonating means. The gas source is connected to the gun by high pressure hose with in-line control valves and pressure gauges ahead of the trigger mechanism.

Barricades

- **Barricade** means effectively screening a building containing explosives by means of a natural or artificial barrier from a magazine, another building, a railway, or highway.
- **Artificial barricade** means a barricade of such height that a straight line from the top of any sidewall of the building containing explosives to the eave line of any magazine or other building or to a point12 feet above the center of a railway or highway shall pass through such barrier, an artificial mound or properly revetted wall of earth with a minimum thickness of 3 feet.
- **Natural barricade** means and natural hill, mound, wall, or barrier composed of earth, rock, or other solid material at least 3 feet thick.

WAC 296-52-60130 (Cont.)

Blast area means the area of a blast that is effected by:

- Flying rock missiles
- Gases
- Concussion.

Blast pattern means the plan of the drill holes laid out and a display of the burden distance, spacing distance, and their relationship to each other.

Blast site means the area where explosive material is handled during loading and 50 feet in all directions from loaded blast holes or holes to be loaded.

Blaster means a person trained and experienced in the use of explosives and licensed by the department.

Blaster in charge means a licensed blaster who is:

- Fully qualified, by means of training and experience in explosives use
- Adequately trained, experienced, and capable of recognizing hazardous conditions throughout the blast area
- In charge of:
  - The blast process
  - All aspects of explosives and blasting agent storage, handling, and use as recommended by the manufacturer and as required by this chapter
- In a position of authority.
  - To take prompt corrective action in all areas of the blast operation
  - Over all other blasters at the blast area

Blaster's license means an individual license issued by the department under the provisions of chapter 296-52 WAC.

Blasting agent means any material or mixture consisting of a fuel and oxidizer:

- That is intended for blasting
- Not otherwise defined as an explosive
- If the finished product, as mixed for use or shipment, cannot be detonated by means of a number 8 test blasting cap when unconfined
  - A number 8 test blasting cap is one containing two grams of a mixture of 80 percent mercury fulminate and twenty percent potassium chlorate, or a blasting cap of equivalent strength. An equivalent strength cap comprises 0.40-0.45 grams of PETN base charge pressed in an aluminum shell with bottom thickness not to exceed 0.03 of an inch, to a specific gravity of not less than 1.4 g/cc., and primed with standard weights of primer depending on the manufacturer.

Blasting cap or cap when used in connection with the subject of explosives shall mean detonator.

Blockholing means the breaking of boulders by firing a charge of explosives that has been loaded in a drill hole.

Buildings that are not inhabited means a building(s) which has no one in it while explosives are being made up in an adjacent explosives makeup room or while explosives are being held in an adjacent day box or hand charge storage facility.

Competent person means a person who:

- Is capable of identifying existing hazardous and the forecasting of hazards of working conditions which might be unsanitary or dangerous to personnel or property
- Has authorization to take prompt corrective action to eliminate such hazards.

WAC 296-52-60130 (Cont.)

Consumer fireworks means:

- Any small firework device:
  - Designed to produce visible effects by combustion
  - That must comply with the construction, chemical composition, and labeling regulations of the U.S. Consumer Product Safety Commission (Title 16 CFR, Parts 1500 and 1507),
- A small device designed to produce audible effects which include, but are not limited to:
  - Whistling devices
  - Ground devices containing 50 mg or less of explosive materials
  - Aerial devices containing 130 mg or less of explosive materials

Note: Fused set pieces containing components, which, together, exceed 50 mg of salute powder are not included.

Conveyance means any unit used for transporting explosives or blasting agents, including, but not limited to:

- Trucks
- Trailers
- Rail cars
- Barges
- Vessels.

Day box means a box which:

- Is a temporary storage facility for storage of explosive materials
- Is not approved for unattended storage of explosives
- May be used at the worksite during working hours to store explosive materials, provided the day box is:
  - Constructed as required (WAC 296-52-70065, Explosives day box),
  - Marked with the word “explosives”
  - Used in a manner that safely separates detonators from other explosives
  - Guarded at all times against theft

Dealer means any person who purchases explosives or blasting agents for the sole purpose of resale and not for use or consumption.

Detonating cord means a round flexible cord containing a center core of high explosive and used to initiate other explosives.

Detonator means any device containing any initiating or primary explosive that is used for initiating detonation and includes, but is not limited to:

- Electric and electronic detonators of instantaneous and delay types
- Detonators for use with safety fuses, detonating cord delay connectors, and nonelectric instantaneous delay detonators which use detonating cord, shock tube, or any other replacement for electric leg wires.

Discharge hose means a hose with an electrical resistance high enough to limit the flow of stray electric currents to safe levels, but not high enough to prevent drainage of static electric charges to the ground. Hose not more than 2 megohms resistance over its entire length and of not less than 5,000 ohms per foot meets the requirement.

WAC 296-52-60130 (Cont.)

Display fireworks means large fireworks:

- Designed primarily to produce visible or audible effects by combustion, deflagration, or detonation, and include, but are not limited to:
  - Salutes containing more than 2 grains (130 mg) of explosive materials
  - Aerial shells containing more than 40 grams of pyrotechnic compositions
  - Other display pieces, which exceed the limits of explosive materials for classification as "consumer fireworks"
  - Fused set pieces containing components, which together exceed 50 mg of salute powder

Dud means an unexploded deployed charge which still has its initiation system in place.

Electric detonator means a blasting detonator designed for and capable of detonation by means of electric current.

Electric blasting circuitry consists of these items:

- **Bus wire.** An expendable wire used in parallel or series, or in parallel circuits, which are connected to the leg wires of electric detonators.
- **Connecting wire.** An insulated expendable wire used between electric detonators and the leading wires or between the bus wire and the leading wires.
- **Leading wire.** An insulated wire used between the electric power source and the electric detonator circuit.
- **Permanent blasting wire.** A permanently mounted insulated wire used between the electric power source and the electric detonator circuit.

Electric delay detonators means detonators designed to detonate at a predetermined time after energy is applied to the ignition system.

Electronic detonator means a detonator that utilizes stored electrical energy as a means of powering an electronic timing delay element/module that provides initiation energy for firing the base charge.

Emulsion means an explosive material containing:

- Substantial amounts of oxidizer dissolved in water droplets, surrounded by an immiscible fuel
- Droplets of an immiscible fuel surrounded by water containing substantial amounts of oxidizer.

Explosives means:

- Any chemical compound or mechanical mixture:
  - Commonly intended or used for the purpose of producing an explosion
  - That contains any oxidizing and combustible units or other ingredients in proportions, quantities or packing that an ignition by fire, friction, concussion, percussion, or detonation of any part of the compound or mixture may cause sudden generation of highly heated gases resulting in gaseous pressures capable of producing destructive effects on contiguous objects or of destroying life or limb
- All material classified as Division 1.1, 1.2, 1.3, 1.4, 1.5, or 1.6 explosives by U.S. DOT
- For the purposes of public consumer use, the following are not considered explosives unless they are possessed or used for a purpose inconsistent with small arms use or other legal purposes:
  - Small arms ammunition
  - Small arms ammunition primers
  - Smokeless powder, not exceeding 50 pounds
  - Black powder, not exceeding 5 pounds

Explosive actuated power devices means any tool or special mechanized device, which is activated by explosives and does not include propellant actuated power devices.

WAC 296-52-60130 (Cont.)

Explosives classifications. Explosives classifications include, but are not limited to:

- Division 1.1 and Division 1.2 explosives (possess mass explosion or detonating hazard):
  - Dynamite
  - Nitroglycerin
  - Picric acid
  - Lead azide
  - Fulminate of mercury
  - Black powder (exceeding 5 pounds)
  - Detonators (in quantities of 1,001 or more)
  - Detonating primers
- Division 1.3 explosives (possess a minor blast hazard, a minor projection hazard, or a flammable hazard):
  - Propellant explosives
  - Smokeless powder (exceeding 50 pounds)
- Division 1.4 explosives
  - Explosives that present a minor explosion hazard
  - Includes detonators that will not mass detonate in quantities of 1,000 or less
- Division 1.5 explosives
  - Explosives with a mass explosion hazard but are so insensitive that there is little probability of initiation
  - ANFO and most other blasting agents are in this division
- Division 1.6 explosives:
  - Explosives that are extremely insensitive and do not have a mass explosion hazard

Explosives exemption. The exemption for small arms ammunition, small arms ammunition primers, smokeless powder, not exceeding 50 pounds, and black powder, not exceeding 5 pounds:

- Applies to public consumer use only
- Does not apply to the employer employee relationship covered under the Washington Industrial Safety and Health Act.

Explosives international markings.

- The department will accept U.S. DOT and/or ATF international identification markings on explosives and/or explosives containers or packaging
- This exception is under the authority of RCW 70.74.020(3) and in lieu of Washington state designated markings (as defined by RCW 70.74.010(4) (Division 1.1, 1.2, and 1.3) and required by RCW 70.74.300).

Explosives manufacturing building means any building or structure, except magazines:

- Containing explosives where the manufacture of explosives, or any processing involving explosives, is conducted
- Where explosives are used as a component part or ingredient in the manufacture of any article or device.

WAC 296-52-60130 (Cont.)

Explosives manufacturing plant means all lands with buildings used:

- In connection with the manufacturing or processing of explosives
- For any process involving explosives
- For the storage of explosives
- To manufacture any article or device where explosives are used as a compound part or ingredient in the article or device.

Fireworks means any composition or device:

- Designed to produce a visible or an audible effect by combustion, deflagration, or detonation
- Which meets the definition of "consumer fireworks" or "display fireworks."

Forbidden or not acceptable explosives means explosives which are forbidden or not acceptable for transportation by common carriers by rail freight, rail express, highway, or water in accordance with the regulations of the Federal Department of Transportation (DOT).

Fuel means a substance, which may react with oxygen to produce combustion.

Fuse (safety). See "safety fuse."

Fuse igniter means a special pyrotechnic device intended to be used to ignite safety fuses.

Hand charge means an explosive charge with a cap and fuse assembly inserted in place.

Handler means any individual who handles explosives or blasting agents for the purpose of transporting, moving, or assisting a licensed blaster in loading, firing, blasting, or disposal.

Note: This does not include employees of a licensed manufacturer engaged in manufacturing process, drivers of common carriers, or contract haulers.

Hand loader means any person who engages in the noncommercial assembly of small arms ammunition for personal use; specifically, any person who installs new primers, powder, and projectiles into cartridge cases.

Highway means roads, which are regularly and openly traveled by the general public and includes public streets, alleys, roads, or privately financed, constructed, or maintained roads.

Improvised device means a device, which is:

- Fabricated with explosives
- Fabricated with destructive, lethal, noxious, pyrotechnic, or incendiary chemicals, and designed, or has the capacity to disfigure, destroy, distract, and harass.

Inhabited building means:

- A building which is regularly occupied, in whole or in part, as a habitat for human beings
- Any church, schoolhouse, railroad station, store, or other building where people assemble.

Note: This does not mean any building or structure occupied in connection with the manufacture, transportation, storage, or use of explosives.

Low explosives means explosive materials, which can be caused to deflagrate when, confined. This includes:

- Black powder, safety fuses, igniters, igniter cords, fuse lighters, and display fireworks defined as Division 1.2 or Division 1.3 explosives by U.S. DOT (49 CFR Part 173).

WAC 296-52-60130 (Cont.)

Note: This does not apply to bulk salutes.

Magazine means any building, structure, or container approved for storage of explosive materials.

Note: This does not apply to an explosive manufacturing building.

Manufacturer means engaged in the business of manufacturing explosive materials for purposes of sale or distribution or for his or her own use.

Exemptions: The following exemptions are restricted to materials and components, which are not classified (by U.S. DOT) as explosives until after they are mixed. With this restriction, the definition of manufacturer does not include:

- *Inserting a detonator into a cast booster or a stick of high explosive product to make a primer for loading into a blast hole*
- *The act of mixing on the blast site, either by hand or by mechanical apparatus, binary components, ammonium nitrate, fuel oil, and/or emulsion products to create explosives for immediate down blast hole delivery.*

Misfire means the complete or partial failure of an explosive charge to explode as planned.

Mudcap (also known as bulldozing and dobying) means covering the required number of cartridges that have been placed on top of a boulder with a three or four-inch layer of mud, which is free from rocks or other material that could cause a missile hazard.

No-light means the failure of a safety fuse to ignite.

Nonelectric delay detonator means a detonator with an integral delay element in conjunction with and capable of being detonated by a:

- Detonation impulse
- Signal from miniaturized detonating cord
- Shock tube.

Oxidizer means a substance that yields oxygen readily to stimulate the combustion of organic matter or other fuel.

Permanent magazines means magazines that:

- Are fastened to a foundation
- Do not exceed permanent magazine capacity limits (RCW 70.74.040)
- Are approved and licensed
- Are left unattended.

Person means any individual, firm, partnership, corporation, company, association, person or joint stock association or trustee, receiver, assignee, or personal representative of that entity.

Person responsible, for an explosives magazine, means:

- The person legally responsible for a magazine that actually uses the magazine
- The person is responsible for the proper storage, protection, and removal of explosives, and may be the owner lessee, or authorized operator.

Portable (field) magazines means magazines that are:

- Designed to be unattended
- Not permanently fastened to a foundation
- Constructed or secured to make sure they cannot be lifted, carried, or removed easily by unauthorized persons
- Limited to the capacity of explosives required for efficient blasting operation
- Approved and licensed.

WAC 296-52-60130 (Cont.)

Possess means the physical possession of explosives in one's hand, vehicle, magazine, or building.

Primary blasting means the blasting operation that dislodged the original rock formation from its natural location.

Primer means a unit, package, cartridge, or container of explosives inserted into or attached to a detonator or detonating cord to initiate other explosives or blasting agents.

Propellant actuated power device means any tool, special mechanized device, or gas generator system, which is actuated by a propellant and releases and directs work through a propellant charge.

Public utility transmission systems means:

- Any publicly owned systems regulated by:
  - The utilities and transportation commission
  - Municipalities
  - Other public regulatory agencies, which include:
  - Power transmission lines over 10 kV, telephone cables, or microwave transmission systems
  - Buried or exposed pipelines carrying water, natural gas, petroleum, or crude oil or refined products and chemicals

Purchaser means any person who buys, accepts, or receives explosives or blasting agents.

Pyrotechnics, commonly referred to as fireworks, means any combustible or explosive compositions or manufactured articles designed and prepared for the purpose of producing audible or visible effects.

Qualified person means a person who has successfully demonstrated the ability to solve or resolve problems relating to explosives, explosives work, or explosives projects by:

- Possession of a recognized degree or certificate
- Professional standing
- Extensive knowledge, training, and experience.

Railroad means any type of railroad equipment that carries passengers for hire.

Safety fuse (for firing detonators) means a flexible cord containing an internal burning medium by which fire is conveyed at a continuous and uniform rate.

Secondary blasting means using explosives, mudcapping, or blockholing to reduce oversize material to the dimension required for handling.

Shock tube means a small diameter plastic tube:

- Used for initiating detonators
- That contains a limited amount of reactive material so energy, transmitted through the tube by means of a detonation wave, is guided through and confined within the walls of the tube.

Small arms ammunition means any shotgun, rifle, pistol, or revolver cartridge, and cartridges for propellant actuated power devices and industrial guns.

Note: This does not mean military type ammunition containing explosive bursting incendiary, tracer, spotting, or pyrotechnic projectiles.

Small arms ammunition primers means small percussion sensitive explosive charges encased in a detonator or capsule used to ignite propellant power or percussion detonators used in muzzle loaders.

Smokeless powder means solid chemicals or solid chemical mixtures that function by rapid combustion.

Special industrial explosive devices means explosive actuated power devices and propellant-actuated power devices.

WAC 296-60130 (Cont.)

Special industrial explosives materials means shaped materials and sheet forms and various other extrusions, pellets, and packages of high explosives, which include:

- Dynamite
- Trinitrotoluene (TNT)
- Pentaerythritol tetranitrate (PETN)
- Hexahydro-1, 3, 5-trinitro-s-triazine (RDX)
- Other similar compounds used for high energy rate forming, expanding, and shaping in metal fabrication, and for dismemberment and quick reduction of scrap metal.

Springing means the creation of a pocket in the bottom of a drill hole by the use of a moderate quantity of explosives so that larger quantities of explosives may be inserted.

Sprung hole means a drilled hole that has been enlarged by a moderate quantity of explosives to allow for larger quantities of explosives to be inserted into the drill hole.

Stemming means a suitable inert incombustible material or device used to confine or separate explosives in a drill hole or cover explosives in mudcapping.

Trailer means semi-trailers or full trailers, as defined by U.S. DOT, which are:

- Built for explosives
- Loaded with explosives
- Operated in accordance with U.S. DOT regulations.

U.S. DOT means the United States Department of Transportation.

Vehicle means any car, truck, tractor, semi-trailer, full trailer, or other conveyance used for the transportation of freight.

Water-gels or emulsion explosives. These explosives:

- Comprise a wide variety of materials used for blasting. Two broad classes of water-gels are those which:
  - Are sensitized by material classed as an explosive, such as TNT or smokeless powder
  - Contain no ingredient classified as an explosive which are sensitized with metals, such as aluminum, or other fuels
- Contain substantial proportions of water and high proportions of ammonium nitrate, some ammonium nitrate is in the solution in the water, and may be mixed at an explosives plant, or the blast site immediately before delivery into the drill hole.

PART B
EXPLOSIVE LICENSING

WAC **Page**

WAC 296-52-61005 Types of explosive licenses. 1
WAC 296-52-61010 License applicants must provide this information....1
WAC 296-52-61015 License applicants must complete department forms. 1
WAC 296-52-61020 License fees....2
WAC 296-52-61025 Verification of applicant information....2
WAC 296-52-61030 Applicant participation....2
WAC 296-52-61035 Criminal records. 3
WAC 296-52-61040 Reasons why applicants may be disqualified....3
WAC 296-52-61045 License terms. 3
WAC 296-52-61050 License renewal. 3
WAC 296-52-62005 Responsibility to obtain a dealer's license....3
WAC 296-52-62010 Dealer applicant information. 4
WAC 296-52-62025 Prohibit explosives items from sale or display in these areas. 4
WAC 296-52-62030 Container labeling....4
WAC 296-52-62035 Authorized agent information. 4
WAC 296-52-62040 Verification of customer identity. 4
WAC 296-52-62045 Recordkeeping and reporting....5
WAC 296-52-63005 Responsibility to obtain a purchaser's license....5
WAC 296-52-63010 Applicant information....5
WAC 296-52-63020 Authorized agents. 6
WAC 296-52-63025 Explosive order deliveries....6
WAC 296-52-63030 Notify the department of blaster changes....6
WAC 296-52-64005 Responsibility to obtain a blaster's license....7
WAC 296-52-64020 General qualifications for blasters. 8
WAC 296-52-64030 List A qualifications....8
WAC 296-52-64035 List B qualifications....8
WAC 296-52-64040 List C qualifications....9
WAC 296-52-64045 Application....9
WAC 296-52-64050 Blaster license applicant information....9
WAC 296-52-64055 Blaster license testing. 9
WAC 296-52-64065 Blaster license limits....9
WAC 296-52-64075 Blaster license disclosure....9
WAC 296-52-64080 Purchaser disclosure....9
WAC 296-52-64085 Changes to a blaster's license classification....10
WAC 296-52-64090 Blaster license renewal. 10
WAC 296-52-64095 List A and B renewal qualifications....10
WAC 296-52-64100 List C renewal qualifications. 10
WAC 296-52-650 Manufacturer's license. 10
WAC 296-52-65005 Responsibility to obtain a manufacturer's license. 10
WAC 296-52-65010 Manufacturer applicant information. 11
WAC 296-52-65020 Conditions of a manufacturer's license. 11
WAC 296-52-65025 Annual inspection. 11
WAC 296-52-65030 Site plan. 12
WAC 296-52-660 Storage license. 12
WAC 296-52-66005 Responsibility to obtain a storage license....12
WAC 296-52-66010 Storage applicant information....12
WAC 296-52-66015 Storage site inspections. The department will: 12
WAC 296-52-66020 Demonstration of handling and storage experience. 12

WAC **Page**

WAC 296-52-66030 Storage license number. 13
WAC 296-52-66035 Storage limit. 13
WAC 296-52-66040 Annual storage inspection. 13
WAC 296-52-66045 Mobile storage sites. 13
WAC 296-52-66050 Moving a licensed magazine. 13
WAC 296-52-66053 Altering or destroying a licensed magazine. 13
WAC 296-52-66057 Transfer, sale or lease of a magazine or mobile storage site. 13
WAC 296-52-66060 Reporting changes in conditions. 14

WAC 296-52-61005 Types of explosive licenses.

Type of License	Where to Look for Requirements
Dealer's	WAC 296-52-620
Purchaser's	WAC 296-52-630
Blaster's	WAC 296-52-640
Manufacturer's	WAC 296-52-650
Storage	WAC 296-52-660

WAC 296-52-61010 License applicants must provide this information.

(1) Applicants must provide the following information to the department:

- An individual must provide:
  - Their name, address, and citizenship.
- A partnership must provide:
  - The name, address, and citizenship for each partner
  - The name and address of the applicant.
- An association or corporation must provide:
  - The name, address, and citizenship for each officer and director
  - The name and address of the applicant.

(2) Applicants must:

- Meet any license specific requirements
- Provide their Social Security number (RCW 26.23.150)
- Provide any information requested by the department before a new or renewal license will be issued.

WAC 296-52-61015 License applicants must complete department forms.

Applications must be completed on department forms.

License application forms may be obtained from and submitted to:

Department of Labor and Industries, WISHA Services Division
Post Office Box 44655,
Olympia, WA 98504-4655.

Note: Purchaser and blaster license applications may also be obtained from explosive dealers or department service locations. (You will find a complete list of L&I service locations at www.lni.wa.gov.)

WAC 296-52-61020 License fees.

Applicable license fees must be included with new or renewal explosives license applications.

Type of License	Fee
Dealer's License	50.00
Purchaser's License	25.00
Blaster's License	50.00
Manufacturer's License	50.00
Storage License	(See table below)

Explosive Materials **STORAGE LICENSE FEES** *RCW 70.74.140 applies*			
EXPLOSIVES	**DETONATORS**	**FEE** (for each magazine or mobile site)	
Maximum Weight (pounds) of explosives permitted in each magazine or mobile site.	**Maximum Number** of detonators permitted in each magazine or mobile site.	**Annual**	**Permanent Storage License for Two Years**
200	133,000	50.00	100.00
1,000	667,000	125.00	250.00
5,000	3,335,000	175.00	350.00
10,000	6,670,000	225.00	450.00
50,000	33,350,000	300.00	600.00
300,000	200,000,000	375.00	750.00

Note: License fees will not be refunded when a license is revoked or suspended for cause.

WAC 296-52-61025 Verification of applicant information.

The department will verify license application statements before an explosives license is issued.

WAC 296-52-61030 Applicant participation.

Applicants:

- Must cooperate and assist the department in all aspects of the application review
- Must provide all information requested by the department to:
  - Verify application statements
  - Help with any questions
- Must furnish their fingerprints to the department on department forms
  - Fingerprinting and criminal history record information checks are required for management officials directly responsible for explosives operations
- Must pay the fee to the department for processing the fingerprint card (RCW 70.74.360(1).

WAC 296-52-61035 Criminal records.

The Washington state patrol will provide any criminal records to the director upon request.

WAC 296-52-61040 Reasons why applicants may be disqualified.

(1) Licenses will not be issued for the manufacture, retail sale or purchase of explosives to any applicant who is any of the following:

- Does not provide proof of a valid explosive license or permit issued by the Bureau of Alcohol, Tobacco, Firearms, and Explosives (ATF)
- Under 21 years of age
- Whose license is suspended or revoked, except as provided in this section
- Convicted in any court of a crime punishable by imprisonment for a term exceeding one year
- Legally determined at the time of application to be:
  - Mentally ill
  - Insane
  - Committed to a mental institution
  - Incompetent due to any mental disability or disease at the time of application.

Note: The department will not reissue a license until competency has been legally restored.

- Physically ill or disabled, and cannot use explosives safely. Disqualifying disabilities may include, but are not limited to:
  - Blindness
  - Deafness
  - Epileptic or diabetic seizures or coma.

Note: The department will not reissue a license until the applicant's physical ability is verified by a qualified physician through the appeal process (WAC 296-52-60065, Violation appeals).

- Who is an alien, unless:
  - There lawfully admitted for permanent residence
  - There in lawful nonimmigrant status
- Who has been dishonorably discharged from the United States armed forces
- Who has renounced their citizenship from the United States.

(2) A user (blaster) license will not be issued if the applicant is denied a receiver or employee possessor designation by ATF.

WAC 296-52-61045 License terms.

All licenses, including storage licenses, are valid for one year from the date of issue, unless revoked or suspended by the department prior to the expiration date.

WAC 296-52-61050 License renewal.

An explosives license must be renewed before the expiration date of the license.

DEALER'S LICENSE

WAC 296-52-62005 Responsibility to obtain a dealer's license.

Any person, firm, partnership, corporation, or public agency wanting to purchase explosives (including black powder and blasting agents) for resale, must have a valid dealer's license issued by the department and a valid license or permit issued by the ATF.

WAC 296-52-62010 Dealer applicant information.

The dealer applicant must:

- Give the reason they want to participate in the business of dealing in explosives
- Provide information required by WAC 296-52-61010, License applicants must provide this information
- Provide other pertinent information required by the department.

WAC 296-52-62025 Prohibit explosives items from sale or display in these areas.

Explosives, improvised devices, or blasting agents cannot be sold, displayed, or exposed for sale on any:

- Highway
- Street
- Sidewalk
- Public way
  or
- Public place.

WAC 296-52-62030 Container labeling.

Any package, cask, or can containing any explosive, nitroglycerin, dynamite, or black and/or smokeless powder put up for sale or delivered to any warehouse worker, dock, depot, or common carrier, must be properly labeled with its explosive classification.

WAC 296-52-62035 Authorized agent information.

A dealer must make sure the purchaser provides a list of people on their authorized agent list with the following information:

- Name
- Address
- Driver's license number or valid identification
- Social Security number (as required by RCW 26.23.150)
- Place of birth
- Date of birth.

WAC 296-52-62040 Verification of customer identity.

(1) **Orders.**

(a) An order for explosives can be placed:

- In person
- By telephone
  or
- In writing

(b) The dealer must receive proper authorization and identification from the person placing the order to verify the person is either the:

- Purchaser
  or
- Purchaser’s authorized agent

Note: This requirement does not apply to licensed common carrier companies when the common carrier:

- Is transferring explosive materials from the seller to the purchaser
  and
- Complies with transfer practices of the state and federal U.S. DOT regulations.

WAC 296-52-62040 (Cont.)

(2) **Deliveries.** The dealer must:

(a) Not distribute explosive materials to an unauthorized person.

(b) Make sure the recipient is the purchaser or the purchaser's authorized agent.

(c) Verify the recipient's identity from a photo identification card (for example, driver's license).

(d) Obtain the:

(i) Purchaser's magazine license number when explosives are delivered to a storage magazine.

(ii) Legal signature of the purchaser or the purchaser's authorized agent on a receipt documenting the explosives were received.

WAC 296-52-62045 Recordkeeping and reporting.

(1) **Sale documentation.** A dealer must document the following information when an explosive materials order is placed. A dealer's record must include the:

- Date explosive materials were sold
- Purchaser's name and license number
- Name of the person authorized by the purchaser to physically receive the explosive materials
- Kind of explosive materials sold
- Amount of explosive materials sold
- Date code.

Note: Black powder sales less than five pounds are not required to be reported to the department.

(2) **Retention of records and receipts.** Dealers must keep:

- Signed receipts for a minimum of one year from the date explosives were purchased
- Records of explosives purchased and sold for a minimum of five years.

(3) **Monthly report.**

- A monthly report of the dealer's records must be submitted to the department at the following address:

  Department of Labor and Industries
  WISHA Services Division
  Post Office Box 44655
  Olympia, WA 98504-4655

- Dealer records must be received by the 10th day of each month.

PURCHASER'S LICENSE

WAC 296-52-63005 Responsibility to obtain a purchaser's license.

Any person, firm, partnership, corporation, or public agency wanting to purchase explosives or blasting agents must have a valid purchaser's license or permit issued by the department and a valid license issued by the ATF.

WAC 296-52-63010 Applicant information.

Applicants must provide the following information to the department:

- The reason explosives or blasting agents will be used
- The location where explosives or blasting agents will be used
- The kind of explosives or blasting agents to be used
- The amount of explosives or blasting agents to be used

WAC 296-52-63010 (Cont.)

- An explosives storage plan:
  - Documenting proof of ownership of a licensed storage magazine
    or
  - With a signed authorization to use another person's licensed magazine
    or
  - With a signed statement certifying that the explosives will not be stored
- An authorized agent list, if the purchaser chooses to authorize others to order or receive explosives on their behalf
- The identity and current license of the purchaser's blaster
- Information required by WAC 296-52-61010, License applicants must provide this information
- Any other pertinent information requested by the department.

WAC 296-52-63020 Authorized agents.

(1) **Required information.** The purchaser must provide the following written information for people on their authorized agent list:

- Legal name
- Address
- Driver's license number or other valid identification
- Date of birth
- Place of birth.

(2) **List distribution.** The purchaser must provide a current authorized agent list to:

- The department when applying for a new or renewal license
- Any dealer the purchase plan to order explosive materials from, prior to placing the order.

(3) **Notification of list changes.** The purchaser must make sure the dealer's and department's authorized agent lists are updated as changes occur.

WAC 296-52-63025 Explosive order deliveries.

(1) **Receiver identification.** Any person receiving explosives purchased from a dealer must:

- Provide proper identification and prove to the satisfaction of the dealer that they are:
  - The purchaser
    or
  - Their authorized agent
- Sign their legal signature on the dealer's receipt.

(2) **Delivery locations.** Explosives must be delivered into:

- Authorized magazines
- Approved temporary storage
  or
- Handling areas.

WAC 296-52-63030 Notify the department of blaster changes.

The purchaser must:

- Notify the department when the licensed blaster changes
- Provide their current blaster’s license number to the department.

BLASTER'S LICENSE

WAC 296-52-64005 Responsibility to obtain a blaster's license.

No one may conduct a blasting operation without a valid blaster's license issued by the department.

Note: A blaster's license is not required for a "hand loader."

Blaster license classifications table. The following information shows classification for blasting licenses.

- **Classification list assignment.** Classification list assignment is determined by the use of single or multiple series charges; and the knowledge, training, and experience required to perform the type of blasting competently and safely.
- **Multiple list applications.** When an applicant wants to apply for multiple classifications and the classifications desired are from two or more classification table lists:
  - All classifications must be requested on the application
  - Qualifying documentation for all classifications being applied for must be included in the applicant's resume (WAC 296-52-64050, Applicant information). Training and experience may fulfill qualification requirements in multiple classifications.
- **Request classifications not lists.** Applicants must request specific classifications (not list designations) on their blaster application. Licenses are not issued or endorsed for Classification Table lists A, B, or C.
- **License additions.** To add a classification to an existing license, see WAC 296-52-64085, Changes to a blaster's license classification.

License Classifications Table					
LIST A		LIST B		LIST C	
AB	Aerial Blasting	DE	Demolition	BT	Bomb Technician*
AG	Agriculture	SB	Surface Blasting*	UL	Unlimited*
AV	Avalanche Control	UB	Underground Blasting		
ED	Explosives Disposal*	UW	Underwater Blasting		
FO	Forestry*				
LE	Law Enforcement*				
IO	Industrial Ordinance				
SE	Seismographic				
TS	Transmission Systems				
WD	Well Drilling				

* Detailed classification information.

- **Aerial blasting.** Will require experience and passing aerial blasting test.
- **Bomb technician.** Disposal of bombs, illegal fireworks and explosive devices.
- **Explosives disposal.** Disposal of explosive materials by licensed blasters.
- **Forestry.** Includes logging, trail building, and tree topping.
- **Law enforcement.** Diversionary devices, explosive detection K-9 dog handlers, crowd control devices (stingers) requires taking a handlers test. Tactical entry (breaching) requires taking the tactical entry test.
- **Surface blasting.** Includes construction, quarries, and surface mining.
- **Unlimited.** Includes all classifications except underground blasting and law enforcement.

WAC 296-52-64020 General qualifications for blasters.

(1) **Physical condition.** An applicant must be in good physical condition.

(2) **Drug use.** An applicant cannot be addicted to narcotics, intoxicants, or similar types of drugs.

Note: This rule does not apply to physician prescribed drugs and/or narcotics when taken as directed if their use will not place the blaster, or other employees in danger.

(3) **Knowledge, experience, and performance in transportation, storage, handling, and use of explosives.** A blaster applicant must:

- Have working knowledge of state and local explosives laws and regulations
- Have adequate blaster training, experience, and knowledge
- Be able to:
  - Safely perform the type of blasting to be used
    and
  - Recognize hazardous conditions
- Be competent in the use of each type of blasting method to be used
- Have the ability to understand and give written and oral directions.

WAC 296-52-64030 List A qualifications.

To be considered for a blaster's license, limited to one or more List A classifications, an applicant must have a minimum of 40 hours documented training accrued during the previous 6 years.

The training must include a minimum of one of these three requirements:

- 8 hours basic blaster safety classroom training and 32 hours classification specific field training experience under a qualified blaster
- 16 hours basic blaster safety classroom training and 24 hours classification specific field training experience under a qualified blaster
- 12 months classification specific field training experience.

Aerial blasting classification shall require:

- Standard avalanche control blaster’s license
- Experience requirement of 5 missions under the supervision of a licensed aerial blaster
- Successful completion of a written exam.

Note: Additional personnel on board with a standard avalanche control blaster’s license may log each mission toward the aerial blasting endorsement experience requirement.

WAC 296-52-64035 List B qualifications.

To be considered for a blaster's license, which includes one or more List B classifications, the applicant must meet one of the following requirements listed below:

- 18 months of documented blasting experience which includes a minimum of 12 months of documented experience in List A and 6 months documented blasting experience in each classification being applied for in List B
- 12 months of documented blasting experience in the past 6 years in the specific classification being applied for in List B.

Note: Up to 80 hours of classroom training may be substituted for experience.

WAC 296-52-64040 List C qualifications.

(1) **Unlimited classification.** To be considered for unlimited classification, the applicant must submit a detailed resume documenting:

- Experience in the majority of the classifications in Lists A and B
- A minimum of 5 years of continuous full time blasting experience in the explosives industry where blasting has been the applicant's primary responsibility during the previous 5 years.

(2) **Bomb technician.** To be considered for a bomb technician classification, the applicant must:

- Submit a copy of the certificate of graduation from the FBI Hazardous Devices School (HDS) basic course in Redstone, Alabama
- Submit a copy of the applicant's FBI Bomb Technician Certification identification card. The FBI Bomb Technician Certification card must bear a date that indicates that it is current at the time of application.
- Submit a letter from the applicant's law enforcement agency's head (chief or sheriff) stating that the applicant is a full-time employee assigned to perform bomb technician duties as part of an FBI accredited bomb squad.

WAC 296-52-64045 Application.

WAC 296-52-64050 Blaster license applicant information.

An applicant for a blaster's license must provide the following information to the department:

- The application must be signed by the blasting course instructor and the qualified blaster the applicant trained under
- A detailed resume of blasting training and experience
- Satisfactory evidence of competency in handling explosives
- Information required by WAC 296-52-61010, License applicants must provide this information.

Note: The department may request additional information for the classification being applied for upon review of a blaster's resume.

WAC 296-52-64055 Blaster license testing.

List A and B applicants must pass a written test prepared and administered by the department. List C applicants are exempt from testing.

WAC 296-52-64065 Blaster license limits.

(1) **A blaster's license documents:**

(a) The classifications the blaster is authorized to perform

(b) Any limitations imposed on the licensee.

(2) **The licensee cannot**:

(a) Perform blasting for which they are not licensed
or
(b) Exceed the limits specified on the license.

WAC 296-52-64075 Blaster license disclosure.

A blaster must provide their blaster's license and a valid identification card to the department or other law enforcement representatives upon request.

WAC 296-52-64080 Purchaser disclosure.

A blaster may be required to verify the name of the explosives purchaser.

WAC 296-52-64085 Changes to a blaster's license classification.

Additional blaster classifications may be added to a license. Applicants must:

- Submit a detailed resume which documents blasting experience in the specific classification being applied for
- Pass a written exam prepared and administered by the department.

WAC 296-52-64090 Blaster license renewal.

The following requirements are for license renewal:

- General applicant qualifications, WAC 296-52-64020, General qualifications, apply.
- Renewal qualifications include the requirements of WAC 296-52-64090 License renewal, through WAC 296-52-64100, List C renewal qualifications.
- Training, experience, and responsibility requirements must be accrued during the one year before the application is submitted

WAC 296-52-64095 List A and B renewal qualifications.

The following requirements are for List A and B renewal qualifications:

(1) An application for a license renewal must include documentation of:

- Blasting experience, by providing a minimum of one blast record
  or
- Successful completion of 8 hours of basic blaster's classroom training. The blasting course instructor must witness the submitted documentation.

(2) List A or B applicants who do not meet the minimum classification qualifications must pass a written exam administered by the department.

WAC 296-52-64100 List C renewal qualifications.

The following requirements are for List C renewal qualifications:

(1) **Unlimited classification.** To be considered for a renewal of an unlimited license, an applicant must submit a detailed resume documenting:

- Experience in the majority of classification in List A and B
- Full-time blasting experience in the explosives industry, where blasting has been the applicant's primary responsibility.

(2) **Bomb technician**. To be considered for a renewal of the bomb technician classification, an applicant must:

- Have continuous employment as a law enforcement bomb technician accrued during the previous year
- Submit a copy of their FBI Bomb Technician Certification identification card bearing the name of the person making application and an expiration date that indicates that the card is current and valid as of the date of renewal
- Submit a letter from the applicant’s law enforcement agency’s head (chief or sheriff) stating that the applicant is a full-time employee assigned to perform bomb technician duties as part of an FBI accredited bomb squad.

Note: If the applicant’s card has expired at the time of renewal, they need to show that they are enrolled in the next available course at Redstone, Alabama.

WAC 296-52-650 Manufacturer's license.

WAC 296-52-65005 Responsibility to obtain a manufacturer's license.

Any person, firm, partnership, corporation, or public agency wanting to manufacture explosives or blasting agents, or use any process involving explosives as a component part in the manufacture of any device, article, or product must have a valid manufacturer's license from the department and a valid permit or license issued by the ATF.

WAC 296-52-65010 Manufacturer applicant information.

The manufacturer applicant must provide the following information to the department:

- The reason the applicant wants to manufacture explosives
- The manufacturing or processing location
- The kind of explosives manufactured, processed, or used
- The distance that the explosives manufacturing building is located, or intended to be located, from other buildings, magazines, inhabited buildings, railroads, highways, and public utility transmission systems
- A site plan. The site plan must:
  - Include the distance each manufacturing building is located from:
    - Other buildings on the premises where people are employed
    - Other occupied buildings on adjoining property
    - Buildings where customers are served
    - Public highways
    - Utility transmission systems
  - Demonstrate compliance with:
    - Applicable requirements of the Washington State Explosives Act
    - The separation distance requirements of this chapter
  - Identify and describe all natural or artificial barricades used to influence minimum required separation distances
  - Identify the nature and kind of work being performed in each building
  - Specify the maximum amount and kind of explosives or blasting agents to be permitted in each building or magazine at any one time
- Information required by WAC 296-52-61010, License applicants must provide this information
- Other pertinent information required by the department.

WAC 296-52-65015 Manufacturing site inspections.

The department will:

- Inspect all manufacturing or processing locations:
  - Before they are placed in operation or service
    and
  - Prior to licensing
- Schedule inspections:
  - Once a complete application is received
  - At the earliest available and mutually agreeable date.

WAC 296-52-65020 Conditions of a manufacturer's license.

The department will issue a license to the manufacturer applicant(s) provided:

(1) The required inspection confirms that the site plan is accurate and the facilities comply with applicable regulations of the department.

(2) The applicant(s) or operating superintendent and employees are sufficiently trained and experienced in the manufacture of explosives.

WAC 296-52-65025 Annual inspection.

The department will inspect manufacturing or processing locations annually.

WAC 296-52-65030 Site plan.

The site plan must include:

(1) A copy of the site plan and manufacturer's license must be posted in the main office of each manufacturing plant.

(2) The site plan must be maintained and updated to reflect the current status of manufacturing facilities, occupancy changes, or other pertinent information.

(3) Notifying the department:

- When a significant change occurs in the site plan
- For a consultation before changing operations if the change is of such nature or magnitude that compliance with requirements of this chapter is questionable.

WAC 296-52-660 Storage license.

WAC 296-52-66005 Responsibility to obtain a storage license.

Any person, firm, partnership, corporation, or public agency wanting to store explosive materials must have a valid license from the department.

WAC 296-52-66010 Storage applicant information.

Applicants must provide the following information to the department:

- The address or a legal description of the existing or proposed magazine or mobile storage site must be clearly identified
- The reason explosive materials will be stored
- The kind of explosives or blasting agents that will be stored
- The maximum quantity of explosive materials that are or will be stored
- Identify the total weight, in pounds, of all explosive materials to be stored on site
- The distance that the magazine is located or intended to be located from other magazines, inhabited buildings, explosives manufacturing buildings, railroads, highways, and public utility transmission systems
- How long the storage license is needed
- Information required by WAC 296-52-61010, License applicants must provide this information
- Any other pertinent information requested by the department.

WAC 296-52-66015 Storage site inspections.

The department will:

- Inspect magazines, mobile-storage sites, and manufacturing plants:
  - Before being placed in operation or service
  - Prior to licensing
- Will schedule inspections:
  - Once a complete application is received
  - At the earliest available and mutually agreeable date.

Note: See WAC 296-52-66040, Annual storage inspection, for mobile storage site qualifications.

WAC 296-52-66020 Demonstration of handling and storage experience.

Applicants or officers, agents, or employees of the applicant, must demonstrate satisfactory experience in:

- Handling explosives
- The storage requirements for any type of explosive materials to be stored.

WAC 296-52-66030 Storage license number.

The storage license number must:

(1) Be permanently affixed on the inside and outside of each storage magazine.

(2) Stay with each magazine throughout its life.

WAC 296-52-66035 Storage limit.

A storage license documents the storage limits imposed on the licensee. Storage cannot exceed the limits specified on the license.

WAC 296-52-66040 Annual storage inspection.

Magazines, mobile storage sites, and manufacturing plants will be inspected annually.

WAC 296-52-66045 Mobile storage sites.

Semi-trailers or other mobile facilities used to transport blasting agents on site or on highways are considered adequate for blasting agent storage, provided they meet:

(1) U.S. DOT requirements for transportation of blasting agents.

(2) The requirements of Table H-20, Table of Distances for Storage of Explosives with respect to inhabited buildings, passenger railways, and public highways.

(3) The requirements of Table H-22, Separation Distances of Ammonium Nitrate and Blasting Agents from Explosives or Blasting Agents with respect to one another.

WAC 296-52-66050 Moving a licensed magazine.

(1) When a magazine is moved the owner of the magazine must notify the department with:

(a) The license number of the magazine

(b) The new location of the magazine.

(2) A magazine may be moved on a job site within a reasonable distance from the original location stated on the application without notifying the department, provided the:

(a) New location complies with the requirements of this chapter and the Washington State Explosives Act

(b) Magazine can be quickly located for an inspection.

WAC 296-52-66053 Altering or destroying a licensed magazine.

(1) When a magazine is altered, the licensee must notify the department with:

- The license number of the magazine
- The specific alterations made to the magazine.

(2) When a magazine is destroyed, the licensee must notify the department with the license number of the magazine.

WAC 296-52-66057 Transfer, sale or lease of a magazine or mobile storage site.

(1) When a magazine or mobile storage site is leased, the owner of the magazine or mobile storage site must notify the department with:

(a) The magazine license number or site license number

(b) The name of the individual or company leasing the magazine or mobile storage site.

WAC 296-52-66057 (Cont.)

(2) When a magazine or mobile storage site is transferred or sold from one entity to another, the previous owner/licensee shall notify the department with:

(a) The magazine license number or site license number

(b) The date of the sale or transfer

(c) The name of the individual or company to whom the magazine or mobile storage site was sold or transferred to

(d) Who will be licensing the magazine or mobile storage site

(e) The name of the contact person and phone number.

(3) A new owner/licensee of a magazine or mobile storage site:

(a) Is responsible for the safe operation of the magazine or mobile storage site

(b) They must also:

- Submit a magazine storage application to the department
- Pay the license fee for a minimum of one year
- Obtain a storage license prior to storing explosive materials in the magazine or at the mobile storage site.

WAC 296-52-66060 Reporting changes in conditions.

Any change in conditions around a magazine, mobile storage site, or manufacturing plant that could adversely affect compliance with any requirement of this chapter must be promptly reported to the department. Examples of reportable changes include:

(1) Construction of occupied buildings.

(2) Public utilities transmission systems.

(3) Roads or railroads that have been built closer to the manufacturing plant or magazine.

PART C
USE OF EXPLOSIVE MATERIALS

WAC **Page**

WAC 296-52-67010 Blaster in charge responsibilities. 1
WAC 296-52-67020 Black powder. 3
WAC 296-52-67025 Age of explosives. 3
WAC 296-52-67030 Blast site storage. 3
WAC 296-52-67035 Day box storage. 3
WAC 296-52-67040 Attendants must be present 3
WAC 296-52-67045 Handling explosives. 3
WAC 296-52-67050 Trainee supervision. 3
WAC 296-52-67055 Storms. 4
WAC 296-52-67060 Extraneous electricity and radio frequency (RF) transmitters. 4
WAC 296-52-67065 Vibration and damage control. 7
WAC 296-52-67070 Storage at blast sites. 10
WAC 296-52-67075 Blast area precautions. 10
WAC 296-52-67080 Drilling. 10
WAC 296-52-67085 Loading blast holes. 11
WAC 296-52-67090 Initiation systems. 11
WAC 296-52-67095 Use of safety fuse with detonators. 15
WAC 296-52-67100 Use of detonating cord. 17
WAC 296-52-67105 Firing the blast. 18
WAC 296-52-67110 Precautions after firing. 18
WAC 296-52-67115 Excavation work in pressurized air locks. 19
WAC 296-52-67125 Transportation, storage, and use. 20
WAC 296-52-67130 Fixed location mixing. 20
WAC 296-52-67135 Bulk delivery/mixing vehicles. 23
WAC 296-52-67140 Bulk storage bins. 24
WAC 296-52-67145 Transportation of blasting agents. 25
WAC 296-52-67160 Types and classifications. 25
WAC 296-52-67165 Fixed location mixing. 25
WAC 296-52-67170 Bulk delivery/mixing vehicles. 27
WAC 296-52-67180 Separation distance from vessels and people. 28
WAC 296-52-67185 Swimming and diving activities. 29
WAC 296-52-67190 Initiation systems. 29
WAC 296-52-67195 Loading tubes and casings. 29
WAC 296-52-67200 Multiple charges. 29
WAC 296-52-67210 Storage. 29
WAC 296-52-67215 Separation distance: Electrical storms. 29
WAC 296-52-67220 Proper fume class use. 29
WAC 296-52-67225 Combustible gases or dusts. 30
WAC 296-52-67230 Initiating systems. 30
WAC 296-52-67235 Firing the blast. 30
WAC 296-52-67240 Returning to the blast. 30
WAC 296-52-67245 High speed tunneling: Central primer house. 31

WAC 296-52-67010 Blaster in charge responsibilities.

The blaster in charge is responsible for all aspects of explosives use and must:

(1) Carry a current license with the correct blaster classification for the type of blasting being performed.

(2) Comply with all federal, state, and local government regulations.

(3) Meet the general license qualifications identified in WAC 296-52-64020, General qualifications.

(4) Use every reasonable precaution to ensure the safety of the general public and workers. Reasonable precautions include the use of:

(a) Blast area surveys.

(b) Warning signal posters, which must be posted in suitable locations. Table T-1 shows the information that must be on the poster.

TABLE T-1	
WARNING SIGNAL	A 1 minute series of long blasts 5 minutes prior to blast signal.
BLAST SIGNAL	A series of short blasts 1 minute prior to the shot.
ALL CLEAR SIGNAL	A prolonged blast following the inspection of the blast.

(c) Flags and barricades.

(d) Blasting mats or other suitable protective material.

(5) Exercise and apply independent professional judgment regarding blasting activities, when following instructions from others could result in an illegal act or affect the outcome of a blast.

(6) **Blast operation activities.** The blaster in charge must:

- Have authority over all blasters and be able to promptly correct all actions taken in any area of the blast operation
- Manage the blast operation properly for any type of blasting being performed
- Control blast activities associated with a blast
- Supervise explosive material activities, which include:
  - Keeping a running inventory of all explosives and blasting agents stored at the blast area
  - Supervising all on-site transportation, storage, loading, and firing of explosives
- Notify local jurisdictions when blasting may affect them
- Designate safe locations for personnel during the blast
- Designate a method to determine when all personnel are accounted for in designated safe locations
- Make sure blast observers are able to communicate with the blaster in charge
- Make sure all possible exits to the blast site are observed immediately prior to each blast
- Distribute explosives in the shot
- Be present when a charge is detonated
- Personally detonate the charge or give an order to a designated blaster to detonate the charge

(7) **Notification - Blast incidents.** The blaster in charge must notify the department within 24 hours when:

(a) A misfire is not cleared

(b) Vibration and air blast limits cause injury or property damage

WAC 296-52-67010 (Cont.)

(c) Flyrock causes injury or property damage

(8) **Blast records.** The blaster in charge must:

(a) Keep an accurate inventory of all explosives and blasting agents stored at the blast operation

(b) Keep a blast record with the following information:

- Name of the company or contractor
- Exact location of the blast
- Date and time of detonation
- Name, signature, and license number of the blaster in charge
- Type of material blasted
- Type of explosives used
- Number of holes, burden, and spacing
- Diameter and depth of holes
- Total amount of each type of explosives used
- Maximum amount of explosives per delay period within 8 milliseconds
- Maximum number of hole per delay period within 8 milliseconds
- Method of firing
- Type of circuit
- Direction, distance in feet, and identification of the nearest dwelling, house, public building, school, church, or commercial/institutional building not owned or leased by the blaster in charge conducting the blasting
- Weather conditions
- Type and height (or length) of stemming
- A statement indicating whether blast mats or other flyrock protection were used
- Type of initiation system used
- Type of delay periods used
- Seismograph records and readings, if required or used, must accurately identify the:
  - Name of the person and business analyzing the record
  - Exact location of the seismograph
  - Distance of the seismograph from the blast
- Sketch of the blast pattern. The sketch must include the:
  - Number of hole
  - Burden
  - Spacing distance delay pattern
- Sketch of the hole profile if decking was used
- General comments which include:
  - Unusual conditions/situations during the blast
  - The calculated scale distance number
  - Misfires
- Complete and sign each blast record
- Retain blast records for a minimum of 3 years
- Make sure blast records are available for department inspection.

Note: A nonmandatory sample blast record can be found in Appendix B. You may use this format or create your own but all the information in this section must be included.

GENERAL EXPLOSIVES RULES

WAC 296-52-67020 Black powder.

Black powder, including black powder manufactured for muzzle loading firearms, cannot be used for blasting.

WAC 296-52-67025 Age of explosives.

The oldest explosive of the kind needed for a blast, must be used first.

WAC 296-52-67030 Blast site storage.

Explosive materials at blast sites must be attended.

WAC 296-52-67035 Day box storage.

A day box used for temporary storage of explosive materials at a job site during working hours at a job site must be:

(1) Constructed in accordance with WAC 296-52-70065, Explosives day box and WAC 296-52-70070, Detonator day box.

(2) Fire, weather, and theft resistant.

(3) Marked with the word "EXPLOSIVES."

(4) Safely separates detonators from other explosives.

(5) Attended to at all times against theft.

(6) On ground which slopes away from the day box for proper drainage.

WAC 296-52-67040 Attendants must be present.

An authorized attendant must be:

(1) Physically present.

(2) Awake.

(3) Alert.

(4) Able to see the explosives at all times.

(5) Able to reach the explosives quickly, without interference.

WAC 296-52-67045 Handling explosives.

Explosives must:

- Be handled by only competent and authorized personnel
- Be delivered and issued only to a purchaser or a purchaser's authorized agent
- Be delivered into authorized magazines, approved temporary storage, or handling areas
- Be carried to the blast site from the main storage magazines by the blaster or blaster's helper in special insulated containers, day boxes, or original U.S. DOT shipping containers
- Never be carried in pockets or clothing, including detonators.

WAC 296-52-67050 Trainee supervision.

Trainees and inexperienced personnel must work under the direct supervision of a fully qualified licensed blaster who knows the sites:

- Blasting method
- Safety procedures
- Blasting signals.

WAC 296-52-67055 Storms.

(1) **Dust storms.** Blasting operations must be completely stopped and all personnel removed from the blast area if a heavy dust storm approaches or is present because it could cause static lightning.

(2) **Thunderstorms.** Blasting operations must stop and all personnel be removed from the blast area if a thunderstorm approaches or is present.

WAC 296-52-67060 Extraneous electricity and radio frequency (RF) transmitters.

Precautions must be taken to prevent unintended electric detonator discharge from extraneous electricity and radio frequency (RF) transmitters. The following are sources of common hazards for extraneous electricity and RF transmissions:

(1) **Extraneous electricity.** Common hazardous sources of extraneous electricity include:

- Adjacent power lines
- Dust storms
- Lightning storms

(2) **RF transmission sources.** Common hazardous sources of RF transmissions include:

- **Mobile transmitters**
  - Citizen band (CB)
  - Side band radio
  - VHF (FM) radio
  - UHF cellular telephones
  - Radar
- **Fixed location transmitters**
  - Base stations for CB
  - Side band or FM radio communications
  - UHF cellular telephone transmitters and service extension repeater systems
  - AM and FM (commercial) radio broadcast transmitters
  - TV broadcast transmitters and repeater system transmitters
  - Surface scan and radio navigation beacons
- **Low flying aircraft** (in particular military aircraft) create the most common serious RF exposures. These highly unpredictable mobile transmitters are very powerful and transmit on a broad spectrum of frequencies, which include, but are not limited to:
  - Radar
  - Laser
  - All common communications bands

Note: The two most dangerous examples are:

- *Low flying automatic terrain following guidance systems*
- *Airplanes which are equipped to jam all common radar and communications frequencies for a distance of several miles around the airborne transmitters.*

(3) **Transportation.** Transportation of explosives must meet these requirements:

- **Public highways.** The Washington utilities and transportation commission (UTC) and Washington state department of transportation (WSDOT) require compliance with ANSI D6.1-1988, Uniform Traffic Control Devices
- **Private roads.** You do not have to comply with ANSI on private roads under department jurisdiction if required warning signs are properly placed when electric detonators are present

WAC 296-52-67060 (Cont.)

(4) **Site survey.** The blaster in charge must conduct or assign a designated appointee to conduct an accurate survey of the entire blast area, to determine:

- The clearance points where roads or right of ways enter and exit the required clearance zone
- If the 1000-foot clearance zone needs adjusting to maintain the permissible clearance zone at all times, if the blast area moves as the job progresses

(5) **Clearance zones.**

Required clearance zones for:	Number of feet
Construction operations	1000 feet
Demolition operations	1000 feet
General industry operations, not subject to construction Requirements	350 feet

(6) **RF-transmitter warning signs.**

W22-1
48" X 48"

42" X 36"

W22-3
42" X 36"

(a) RF-transmitter **warning-sign specifications.**

Signs must:

- Be a specific size. See the signs above for sign dimensions
- Have a "construction" orange background
- Have black letters and borders
- Use all upper case letters that are at least the size shown above

Note: Larger signs may be required where the highway speed limit is more than 55 miles per hour.

WAC 296-52-67060 (Cont.)

(b) **Posting** warning signs must:

- Be adequately placed to warn:
  - All transmitter users against the use of:
- Radio frequency transmitters
- CBs
- Mobile phones
- 2-way radios
- All users of routes into the electric detonator clearance zone
- Be prominently displayed when an electric detonator initiation system is being used during blasting operations and when the electric detonators have been removed from the original U.S. DOT approved shipping container
- Be posted at the beginning of the blast zone minimum clearance point saying:

"TURN OFF CB, MOBILE PHONE, 2-WAY RADIO"

(c) **Blast zone signs.**

- The "BLAST ZONE 1,000 FEET" sign must be posted 1000 feet before the "TURN OFF CB, MOBILE PHONE, 2-WAY RADIO" sign
- The 1000 foot separation distance limit may be reduced (not less than 300 feet) in very slow vehicle travel zones (such as off-road construction right of ways, rock pits, or quarries)

(d) An "END BLAST ZONE" sign must be posted outside the blasting zone clearance limits.

(e) Signs must be covered or removed when blasting operations are not being conducted.

(7) **Voltage identification.** Electrical transmission and distribution line voltage must be accurately identified.

(8) **System clearance identification.** The required clearance for each system must be accurately identified.

(9) **RF transmitters.** Mobile RF transmitters must be deenergized or disconnected when they are less than 100 feet from electric detonators that are not fully contained in their original U.S. DOT shipping containers.

Note: Fixed location RF transmitters represent a higher level of hazard to both storage and blasting operations involving electric detonators because the transmitters are more powerful and transmit dangerous levels of RF exposure over much greater distances.

(10) **Prevention of radio frequency hazards:**

(a) Electric detonators in storage or at blasting operations must meet the appropriate distance table requirements published in the IME Publication Number 20, 1988, *"Safety Guide for the Prevention of Radio Frequency Hazards in the Use of Commercial Electric Detonators (Blasting Caps)."*

(b) If it is necessary to conduct blasting operations inside the required separation distances specified in the IME Pamphlet Number 20, 1988:

- Storage and use of electric detonators is prohibited on the site
- Only detonating cord, safety fuse, shock tube, or other approved nonelectric systems can be used.

WAC 296-52-67065 Vibration and damage control.

(1) Ground vibration - maximum limits.

Either Table 8-A or Table 8-B can be used to determine the maximum limits of ground vibration for any dwelling, public building, school church, commercial site, cofferdams, piers, underwater structures, or institutional building nearby the blasting site. The methods used for monitoring vibration and calculating frequency must be included in the blast plan.

Table 8-A
PEAK PARTICLE VELOCITY LIMITS

Distance from blasting site	Maximum allowable peak particle velocity[1]
0 to 300 ft (91.4 m)	1.25 in/sec (31.75 mm/sec)
301 to 5000 ft (91.5 m to 1524 m)	1.00 in/sec (25.4 mm/sec)
5001 ft (1525 m) and beyond	0.75 in/sec (19 mm/sec)

[1] Peak particle velocity must be measured in three mutually perpendicular directions and the maximum allowable limits must apply to each of these measurements.

(a) Frequency versus particle velocity graphics. In lieu of Table 8-A, a blasting operation has the option to use the graphs shown in Figure 8a or 8b to limit peak particle velocity based upon the frequency of the blast vibration. If either of the graphs in Figure 8a or 8b is used to limit vibration levels, the methods used for monitoring vibration and calculating frequency must be included in the blast plan.

Figure 8a
Alternative Blasting Level Criteria

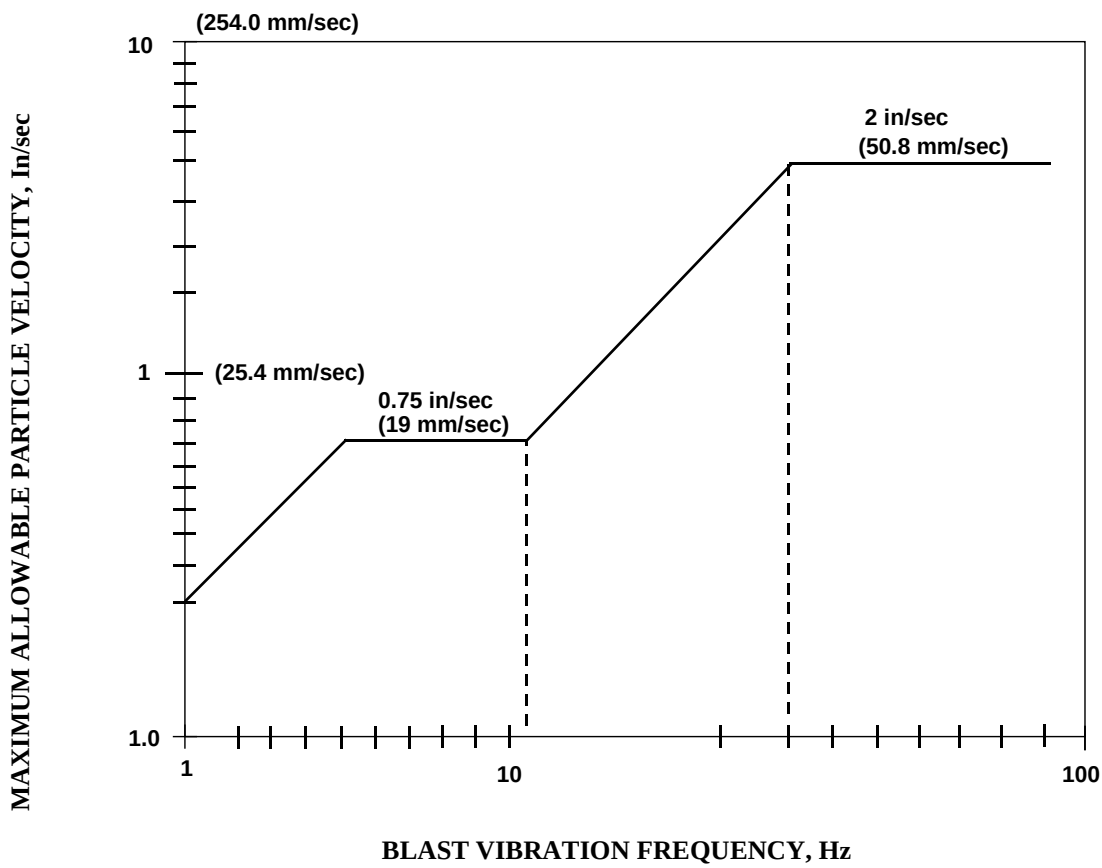

WAC 296-52-67065 (Cont.)

Figure 8b
Alternative Blasting Level Criteria

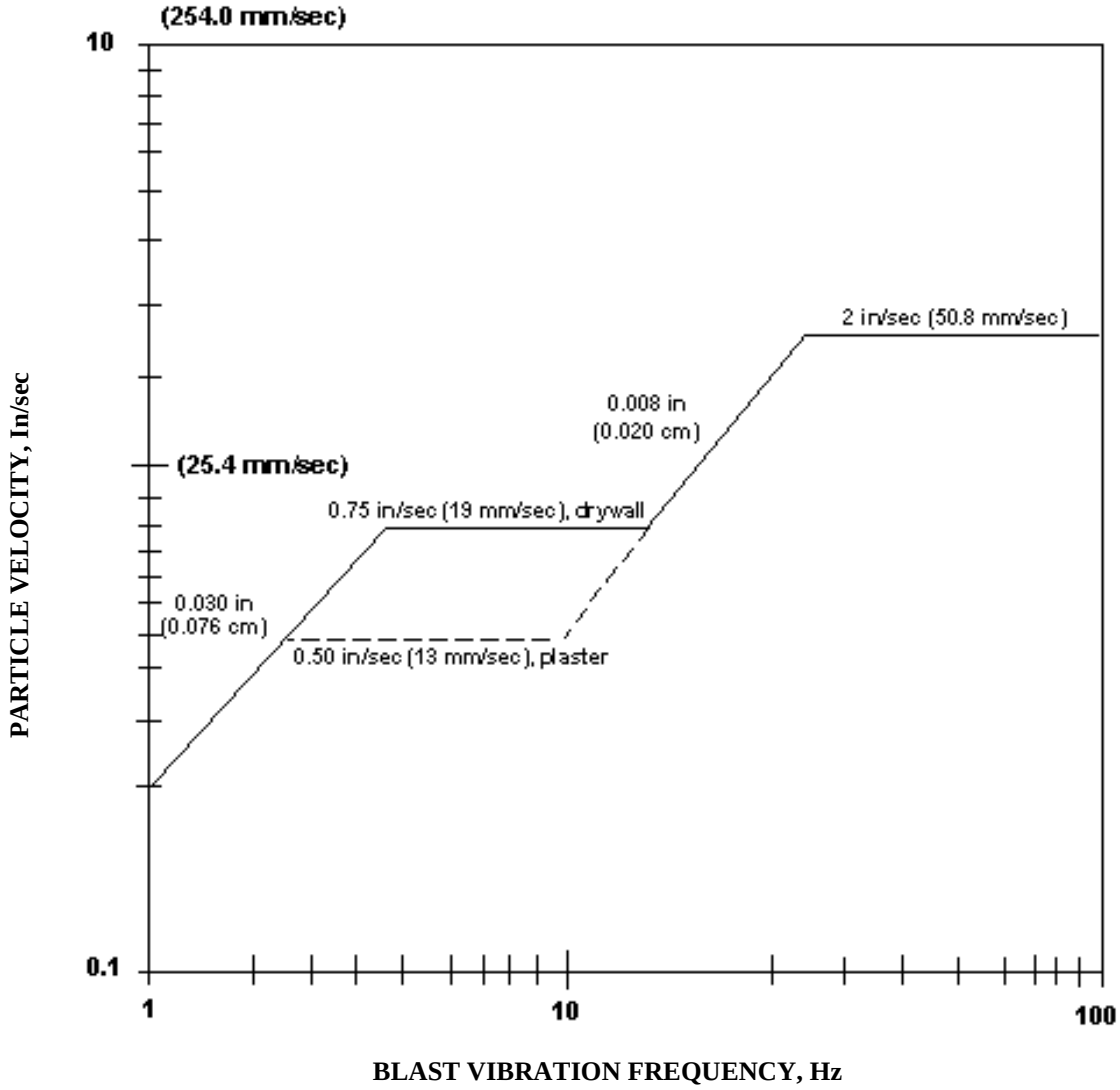

(b) Scaled distance equations. Unless a blasting operation uses a seismograph to monitor a blast to assure compliance with Table 8-A or Figures 9a or 8b, the operation must comply with the scaled distance equations shown in Table 8-B.

WAC 296-52-67065 (Cont.)

Table 8-B SCALED-DISTANCE EQUATIONS	
Distance from Blasting Site	**Scaled Distance Equation**
0 to 300 ft (91.4 m)	W (lbs) .= (d (ft)/50)^2 or W (kg) .= (d (m)/22.6)^2
301 to 5000 ft (92 m to 1524 m)	W (lbs) .= (d (ft)/55)^2 or W (kg) .= (d (m)/24.9)^2
5001 ft (1524 m) and beyond	W (lbs) .= (d (ft)/65) or W (kg) .= (d (m)/29.4)^2

Key:

W .= The maximum weight of explosives in pounds (or kilograms) that can be detonated per delay interval of 8 milliseconds or greater.
d .= The distance in feet (or meters) from the blast to the nearest dwelling, public building, school, church, commercial, or institutional building not owned, leased, or contracted by the blasting operation, or on property where the owner hasn't given a written waiver to the blasting operation.

Note: To convert English Units of scaled distances (ft/lb^2) to metric units (m/kg^2) divide by a factor of 2.21.

(2) Air blast - Maximum limits. Air blast must not exceed the maximum limits listed in Table 8-C. Use Table 8-C to determine maximum air blast limits at any dwelling, public building, school, church, commercial, or institutional building not owned, leased, contracted, or on the property where the owner hasn't provided a written waiver to the blasting operation.

	Table 8-C AIR-BLAST LIMITS		
	Lower Frequency of Measuring System in Hz (.+ or - 3 decibels)		**Measurement Level in Decibels**
	0.1 Hz or Lower	Flat Response	134 Peak
	2 Hz or Lower	Flat Response	133 Peak
	6 Hz or Lower	Flat Response	129 Peak
	C-Weighted	Slow Response	105 Peak dBC

(3) Flyrock outside the blast area:

(a) **Uncontrolled flyrock.** Flyrock traveling in the air or along the ground cannot be cast from the blast area in an uncontrolled manner, which could result in personal injury or property damage. Uncontrolled flyrock (airborne or along the ground), that could cause personal injury or property damage, is not allowed from the blast area.

(b) **Contract or written waiver.** Flyrock cannot be propelled from the blast area onto property where the blasting operation hasn't contracted or received a written waiver from the owner.

(c) **Use of protective material.** When blasting in congested areas or close to a structure, railway, highway, or any other installation that could be damaged, the blast must be covered, before firing, with a mat or other protective material that will prevent fragments from being thrown.

WAC 296-52-67070 Storage at blast sites.

(1) **Packaging materials.** Empty boxes, paper, and fiber packing materials that have previously contained explosive materials must be:

- Disposed of in a safe manner
  or
- Reused in accordance with U.S. DOT hazardous materials regulations

(2) **Opening fiberboard cases.** Nonsparking metallic slitters may be used for opening fiberboard cases.

(3) **Deteriorating explosives.** Deteriorating explosives must be carefully set aside and disposed of according to the manufacturer's specifications.

WAC 296-52-67075 Blast area precautions.

(1) **Warning signs.** Blast area warning signs must:

(a) Be set up at all entrances to the blast area.

(b) Have lettering a minimum of 4 inches high and on a contrasting background.

(2) **Loaded stumps.** All loaded stumps must be marked for identification.

(3) **Lock out.** Cables close to the blast area must be deenergized and locked out by the blaster in charge.

WAC 296-52-67080 Drilling.

(1) **Unexploded charges.**

(a) Drilling cannot begin:

(i) When there is danger of drilling into a charged or misfired hole.

(ii) Until all remaining butts of old holes are examined for unexploded charges.

(b) Unexploded charges must be refired before work proceeds.

(2) **Distance limits during drilling.** Blasters cannot load or use explosives closer than:

(a) The length of the steel being used for drilling
or
(b) Within 50 feet of drilling operations, whichever is greater.

(3) **Prior to loading drill holes.**

(a) Holes must be checked prior to loading to determine depth and conditions.

(b) Drill holes that have contained explosives or blasting agents cannot be deepened.

(c) Drill holes must be large enough to allow unobstructed or free insertion of explosive cartridges.

WAC 296-52-67080 (Cont.)

(4) **Enlarging or springing a drill hole.**

(a) A drill hole cannot be sprung when it is near a loaded hole.

(b) A minimum of two hours must pass after a charge has exploded in a drill hole that was enlarged or "sprung," before loading another charge of explosives into the hole.

Note: You do not have to wait 2 hours if the sprung hole is thoroughly wet down with water before it is loaded.

(c) Flashlight batteries cannot be used as a power source for springing holes.

WAC 296-52-67085 Loading blast holes.

(1) **Power lines and portable electric cables.** Power lines and portable electric cables must be kept at a safe distance from explosives or blasting agents being loaded into drill holes.

(2) **Equipment, machinery, and tools.**

- Any machine or tool not being used to load holes must be removed from the immediate loading area
- Equipment cannot be operated within 50 feet of loaded holes except when:
  - It is needed to add burden or mats
  - Tracking drills out of the loading area

(3) **Holes that may be loaded.** Only holes that will be fired in the next blasting round may be loaded.

(4) **Tamping.**

(a) A primer must never be tamped.

(b) Tamping must be done with wood rods or approved plastic tamping poles that do not have exposed metal parts.

(c) Nonsparking metal connectors may be used for jointed poles.

(d) Violent tamping must be avoided.

(5) **Pneumatic loading.** When loading blasting agents pneumatically over primed boosters:

- A semiconductive delivery hose must be used
- Equipment must be bonded and grounded

(6) **Stemming.** All blast holes in open work must be stemmed to:

(a) The collar.
or
(b) A point, which will confine the charge.

(7) **Attendance of holes.** Loaded holes must be attended or protected.

(8) **Unused explosives.** After loading, all remaining explosives and detonators must be immediately returned to an authorized magazine or day box.

WAC 296-52-67090 Initiation systems.

(1) **General initiation rules.**

(a) **Training and supervision.**

(i) The blaster in charge must provide adequate on-the-job training and supervision in the safe use of initiation systems.

(ii) All members of the blasting crew must be instructed, by the blaster in charge, in the safe use of the initiation system to be used and its system components.

WAC 296-52-67090 (Cont.)

(b) **Manufacturer recommendations.** All initiation systems and system components must be used in accordance with manufacturer recommendations and instructions.

(c) **Vehicle use precautions.**

(i) Explosives bulk trucks or other vehicles operated on a blast site cannot tread on:

(A) Tubing

(B) Connectors
or
(C) Any surface delay component

(ii) If a vehicle must pass over loaded blast holes. Precautions must be made to consolidate tubing, connectors, or any surface delay component at the collar of the hole to prevent vehicle contact.

(d) **Connecting the firing line.** Firing lines cannot be connected to the blast initiating device until all personnel are:

(i) Accounted for

(ii) Removed from the blast danger area
or
(iii) Are in a blast shelter or other location that provides equivalent protection

(e) **Visual inspection.** The blaster in charge must visually inspect the initiation system to make sure it is assembled according to the manufacturer's recommendations, before firing the shot.

(f) **Explosives not used:**

(i) Unused detonators or short capped fuses cannot be placed in holes that may be used for blasting.

(ii) Unused detonators must be removed from the work area and disposed of or stored in a licensed magazine.

(iii) Loose cartridges of explosives, detonators, primers, and capped fuses that are not used by the end of the work shift must be returned to and locked in their magazines.

(2) **Nonelectric initiation systems.**

(a) **Shock tube lines.** When a nonelectric shock tube initiation system is used:

(i) Spools of shock tube lines cannot be spooled from trucks or equipment.

(ii) The shock tube line must:

(A) Be free of knots and tight kinks

(B) Be free of cuts or abrasions that could expose the core to moisture

(C) Not be stretched

(D) Be neat and orderly

(iii) Tie ins must be kept neat and clean.

(iv) Unused lead line must be sealed to prevent moisture and dirt from entering the tube.

(v) Care must be taken to avoid hitting the tube with a shovel when the shock tube is being covered.

(vi) The end of the detonator must be pointed toward the front of the shot to minimize the chance of shrapnel flying to the rear of the blast where the shock tube will be lit.

WAC 296-52-67090 (Cont.)

(b) **Surface connector blocks.** Nonelectrical tubes must:

(i) Be secured properly in surface connector blocks.

(ii) Never exceed the rated capacity of tubes in surface connector blocks.

(c) **Splicing line.** A knot must be tied in the tubes to take the strain off of the splice.

(d) **Detonator cord.** If a detonator cord is used for surface tie in:

(i) All lines must be kept taut.

(ii) Connections to nonelectrical units must be at 90 degree angles.

(e) **Equipment and personnel.**

(i) Equipment cannot roll over shock tubes.

(ii) All unnecessary equipment and personnel must be removed from the blast area during loading.

(3) **Electric initiating systems.**

(a) **Survey of extraneous currents.** A survey to evaluate extraneous currents must be conducted:

(i) By the blaster in charge before adopting any system of electrical firing.

(ii) To eliminate all currents before holes are loaded.

(b) **Detonator compatibility, style, function, and manufacture.** In any single blast using electric detonators, all detonators must be:

(i) Compatible with each other.

(ii) Of the same style or function.

(iii) From the same manufacturer.

(c) **Wire capacity and gauge.**

(i) Connecting wires and lead wires must:

(A) Be insulated single solid wires with sufficient current carrying capacity

(B) Not be less than 20 gauge (American wire gauge) solid core insulated wire

(ii) Firing line or lead wires must:

(A) Be made of solid single wires with sufficient current carrying capacity

(B) Not be less than 14 gauge (American wire gauge) solid core insulated wire

Note: Bus wires, depends on the size of the blast, 14 gauge (American wire gauge) copper is recommended.

(d) **Lead wires.**

(i) **Shunting.** You must shunt the ends of lead wires that will be connected to a firing device by twisting them together before they are connected to leg or connecting wires.

(ii) **Control.** The blaster in charge must keep control of shunted lead wires until loading is completed and the leg wires are attached.

(iii) **Attachment.** Lead wires must be attached by the blaster in charge when it is time to fire the shot.

WAC 296-52-67090 (Cont.)

(e) **Detonator leg wires.** Electric detonator leg wires must:

(i) Be kept shunted (short circuited) until they are connected into the circuit for firing.

(ii) Not be separated (except for testing) until all holes are loaded and the loader is ready to connect the leg wires to the connecting or lead wires.

(f) **Circuits.**

(i) Blasting circuits or power circuits must be used in electric blasting and according to the electric detonator manufacturer's recommendations.

(ii) Care must be taken to make sure an adequate quantity of delivered current is available according to the manufacturer's recommendations, when firing a circuit of electric detonators.

(iii) A power circuit used for firing electric detonators cannot be grounded.

(iv) The firing switch must be designed so the firing lines to the detonator circuit automatically short circuit when the switch is in the “off” position.

(v) The firing switch must be locked in the “open” or “off” position at all times, except when firing from a power circuit.

(g) **Firing line insulation.** The insulation on all firing lines must be adequate and in good condition when firing electrically.

(h) **Testing.**

(i) The firing line must be checked at the terminals with an approved testing device before being connected to the blasting machine or other power sources.

(ii) The circuit, including all detonators, must be tested with an approved testing device before being connected to the firing line.

(i) **Switch keys.** The blaster in charge is the only person who is allowed to have firing switch keys in their possession.

(j) **Blasting machines.** A nonelectric system must be used if these requirements cannot be satisfied:

(i) Blasting machines must be in good condition.

(ii) The efficiency of the blasting machine must be tested periodically to make sure it delivers power at its rated capacity.

(iii) **Responsible person.**

- The blaster in charge must be in charge of blasting machines
- The blaster in charge must connect the lead wires to the blasting machine and must fire the shot.

(iv) **Connections.**

- When firing with blasting machines, connections must be made according to the manufacturer of the electric detonator's recommendations
- All connections must be made from the drill hole back to the source of the firing current
- Lead wires must remain shunted and not connected to the blasting machine or other source of current until the charge is ready to fire
- The number of electric detonators connected to a blasting machine cannot exceed the blasting machine’s rated capacity.

WAC 296-52-67090 (Cont.)

(v) **Series circuit.** In primary blasting, a series circuit cannot contain more detonators than the manufacturer's recommended limits for electric detonators.

(vi) **Circuit testing.** A blaster in charge must use blasting testers specifically designed to test circuits to charged holes.

(vii) **Blasting near power lines.** Whenever lead or blasting wires could be thrown over live overhead powerlines, communication lines, utility services, or other services or structures by the force of an explosion, care must be taken to make sure:

(A) The total length of wires are short enough so they will not hit the lines

(B) The wires are securely anchored to the ground

(C) The owners or operators of the utilities in the blast area are notified

(viii) **Disconnecting lead wires.** After firing an electric blast from a blasting machine, lead wires must be immediately disconnected from the machine and short-circuited.

WAC 296-52-67095 Use of safety fuse with detonators.

(1) **Restricted or prohibited use.**

(a) Safety fuse and detonators, used for conventional blasting, must be in the following:

(i) When extraneous electricity or radio frequency transmissions make the use of electric detonators and wire systems dangerous.

(ii) When overhead electric transmission lines cannot be deenergized and there is danger that blasting wires may be thrown onto the overhead lines during a blast.

(iii) For avalanche control hand charges.

(iv) For specialized applications when detonators and fuses are more suitable than electric or other nonelectric initiation systems.

(b) **Mudcap charges.** A detonator and fuse cannot be used for firing mudcap charges, unless the charges are separated to prevent one charge from dislodging other charges in the blast.

(c) **Drop fuse method.** Dropping or pushing a primer or any explosive with a lighted fuse attached is prohibited.

(d) **Damaged fuses.**

(i) Deteriorated or damaged fuses cannot be used.

(ii) It is prohibited to hang fuses on nails or other objects, which causes sharp bends in the fuse.

(2) **Fuse length.** Fuses:

(a) Must be cut long enough to reach beyond the collar of the drill hole.

(b) Must be 3 feet or longer.

(3) **Fuse burning rate.**

(a) Safety fuse burning rates must be:

(i) Measured.

(ii) Posted in conspicuous locations.

(iii) Brought to the attention of all workers.

(b) A fuse must burn between 40 and 55 seconds per foot or it cannot be used.

WAC 296-52-67095 (Cont.)

(4) **Blaster safety.** When blasting with safety fuses, the length and burning rate of the fuse must allow sufficient time for the blaster to reach a place of safety.

(5) **Fuse capping.**

(a) **Capping location.** Fuses:

(i) Must not be capped in any magazine or near any possible source of ignition.

(ii) Must be capped in a place designated for this purpose.

(iii) Must be capped at least 100 feet from any storage magazine.

(b) **Fuse ends.** Before capping a safety fuse, a short length must be cut from the end of the supply reel to guarantee a freshly cut end in each detonator.

(6) **Crimpers.**

(a) **Design.** The design of detonator crimpers used for attaching detonators to safety fuses must be approved.

(b) **Condition.** Crimpers must be in good repair.

(c) **Accessibility.** Crimpers must be accessible for use.

(7) **Waterproofing.** The joint between the detonator and fuse must be waterproofed with a compound for use in wet locations.

(8) **Primers.**

(a) **Site selection.** Primers must:

(i) Not be made in magazines or near possible sources of ignition.

(ii) Be made in a place designated for this purpose.

(iii) Be made a minimum of 100 feet from any storage magazine.

(b) **Making primers.** When making primers:

(i) Make only enough for one day's use.

(ii) Only nonsparking skewers must be used for punching the hole in the cartridge to insert the capped fuse.

(iii) A detonator cannot be inserted in explosives without first making a hole in the cartridge of proper size or using a standard detonator crimper.

(c) **Storage.** Primers must:

(i) Be stored in a box type magazine.

(ii) Not be stored in magazines where other explosives are stored.

(9) **Hand lighting.**

(a) No one may light more than 12 fuses at a time when hand lighting devices are used.

(b) Two fuses may be considered one fuse when two or more grouped safety fuses are lit as a single fuse by:

(i) An igniter cord
or
(ii) Other similar fuse lighting devices.

(c) When multiple detonators and blasting is done by hand lighting methods, at least two people must be present.

WAC 296-52-67100 Use of detonating cord.

(1) **Cord selection.** Care must be taken to select a detonating cord consistent with the:

- Type and physical condition of the drill hole
- Stemming
- Type of explosives used

(2) **Handling.** A detonating cord must be handled and used with:

- The same respect and care given to other explosives
- Care to avoid damaging or severing the cord during and after loading and hooking up

(3) **Calculating quantity and distance.**

- For quantity and distance purposes, a detonating fuse (up to 60 grains per foot) should be calculated as equivalent to nine pounds of high explosives per 1000 feet
- Heavier cord loads should be rated proportionally

(4) **Trunk lines.**

- Detonators for firing the trunk line cannot be brought to the loading area or attached to the detonating cord until everything else is ready for the blast
- All detonating cord trunk lines and branch lines must be free of loops, sharp kinks, or angles that direct the cord back toward the oncoming line of detonation
- Truck lines in multiple row blasts must make one or more complete loops, with cross ties between loops at intervals less than 200 feet.

(5) **Connections.**

(a) **Detonating cord.** All detonating cords must be:

(i) Competent and positive in accordance with the manufacturer's recommended specifications.

(ii) Kept at right angles to the trunk lines.

(iii) Inspected before firing the blast.

(b) **Knots.**

(i) Knot or other cord-to-cord connections must be made with a detonating cord where the explosive core is dry.

(ii) All detonator cord knots must be tight.

(c) **Connecting detonators.**

(i) A detonator or electric detonator must be taped or securely attached along the side or end of the detonating cord. The detonator end containing the explosive charge must be pointed in the direction of the detonation.

(ii) Manufacturer's recommendations must be followed when short interval delay electric detonators are used with a detonating cord.

(iii) Manufacturer's recommendations must be followed when detonating cord millisecond delay connectors are used with a detonating cord.

(iv) The line of detonating cord extending from a drill hole or a charge must be cut from the supply spool before loading the remainder of the drill hole or placing additional charges.

WAC 296-52-67105 Firing the blast.

(1) A code of blasting signals, equivalent to Table T-1, must be posted in one or more conspicuous places at the blast area and all employees must familiarize themselves with the code of blasting signals and use it. Warning signs must be placed at suitable locations, see WAC 296-52-67075(1), Warning signs.

(2) All charges must be covered with blasting mats or other protective material before firing, where blasting may cause injury or damage by flying rock or debris.

(3) Before a blast is fired, the blaster in charge must give a loud warning signal after they have verified all surplus explosives are in a safe place and all employees, vehicles, and equipment are at a safe distance or under sufficient cover.

(4) Flaggers must be safely stationed on highways that pass through the danger zone, to stop traffic during blasting operations on highways that pass.

(5) The blaster in charge must set the time of the blast and conduct all blasting operations so no shots will be fired without their approval.

TABLE T-1	
WARNING SIGNAL	A 1 minute series of long blasts 5 minutes prior to blast signal.
BLAST SIGNAL	A series of short blasts 1 minute prior to the shot.
ALL CLEAR SIGNAL	A prolonged blast following the inspection of the blast.

WAC 296-52-67110 Precautions after firing.

(1) **Immediately after firing.** Immediately after firing, the blaster in charge must:

(a) Disconnect the firing line from the blasting machine.

(b) Lock the power switches in the “open” or “off” position.

(c) Carefully trace all wires and search for unexploded charges.

(2) **Post blast inspection.** The blaster in charge must perform an inspection of the area and surrounding rubble to determine if all charges have been exploded before employees are allowed to return to the operation.

(3) **Misfires.**

(a) **Misfire found.** Misfires must be:

(i) Immediately reported to their supervisor.

(ii) Recorded on the blast record.

(iii) Reported to the department within 24 hours if not cleared.

(b) **Responsible person.** A blaster in charge must be present and direct the handling of all misfires.

(c) **Termination of work.**

(i) All work must stop, except activities needed to remove the misfire hazard.

(ii) Drilling, digging, or picking is not permitted until:

(A) All misfired holes have been detonated
or
(B) The blaster in charge determines work can proceed

WAC 296-52-67110 (Cont.)

(d) **Evacuation precautions.** The following evacuation precautions must be taken in the event of a misfire:

(i) If a misfire is found, the blaster in charge must make sure safeguards are in place to keep all employees or other personnel from the danger zone, except those needed to remove the misfire hazard.

(ii) Workers cannot return to misfired holes for at least:

(A) Thirty minutes when electric blasting caps are used

(B) One hour when detonators and fuses are used

(e) **Charged or misfired holes.**

(i) Attempts cannot be made to remove explosives from any charged or misfired hole.

(ii) A new primer must be connected and the hole refired.

(f) **Refiring hazard.** If refiring a misfired hole presents a hazard, explosives may be:

(i) Removed by washing out the explosives with water
or
(ii) Removed with air, if the misfire is under water.

(4) **Burning holes.**

(a) Everyone in the endangered area must move to a safe location when explosives are suspected of burning in a hole.

(b) No one, under any circumstances, may return to the hole:

(i) Until the danger has passed
or
(ii) For at least one hour after the hole has been found.

WAC 296-52-67115 Excavation work in pressurized air locks.

(1) **Receiving, handling, storing, and transportation.**

(a) The blaster in charge or powder person is responsible for the receipt, unloading, storage, and on-site transportation of explosives and detonators.

(b) Explosives in transit cannot be left unattended.

(c) Detonators and explosives for each round must be taken directly from the magazines to the blasting zone and immediately loaded.

(2) **Wet holes.** Explosives appropriate for use in wet holes must be:

(a) Water resistant
and
(b) Fume Class 1 or other approved explosives.

(3) **Bonding.** All metal pipes, rails, air locks, and steel tunnel linings must be:

(a) Electrically bonded together and grounded at or near the portal or shaft.

(b) Cross bonded together at not less than 1000-foot intervals throughout the length of the tunnel.

WAC 296-52-67115 (Cont.)

(4) **Air locks.**

(a) No one is allowed to enter the air lock when detonators or explosives are brought in, except:

(i) The blaster in charge.

(ii) The powder person.

(iii) The lock tender.

(iv) Employees needed to carry explosive materials.

(b) Primers, detonators, and explosives must be taken separately into pressure working locks.

(c) Material, supplies, or equipment cannot be brought into air locks with explosive materials.

(d) Detonators and explosives not used after loading a round must be removed from the working chamber before connecting the connecting wires.

(5) **Grounding.** Each air supply pipe must be grounded at its delivery end.

(6) **Mixed face.**

(a) Light charges and light burdens must be used for each hole when tunnel excavation in rock face is approaching or is in mixed face.

(b) Advance drilling must be done when tunnel excavation in rock face approaches mixed face to determine the:

(i) General nature and extent of rock cover
and
(ii) Distance to soft ground as excavation advances.

BLASTING AGENTS

WAC 296-52-67125 Transportation, storage, and use.

Unless otherwise specified in this part, blasting agents must be transported, stored, and used in the same manner as explosives.

Note: Water-gels are covered in WAC 296-52-67150, Water-gel and emulsion explosives and blasting agents, through WAC 296-52-67170, Bulk delivery/mixing vehicles.

WAC 296-52-67130 Fixed location mixing.

(1) **Building location.** Buildings or other facilities used for manufacturing blasting agents must meet the separation distance requirements of Table H-21 for inhabited buildings, passenger railroads, and public highways.

(2) **Building construction.** Buildings used for mixing blasting agents must be constructed of noncombustible material or sheet metal on wood studs and be well ventilated.

(3) **Determining distance.** When determining the distances separating highways, railroads, and inhabited buildings from potential explosions (Table H-20), the sum of all masses that may propagate (i.e., lie at distances less than specified in Table H-22) from either individual or combined donor masses are included in the sum. However, when the ammonium nitrate is included, only 50 percent of its weight must be used because of its reduced blast effects.

(4) **Heat sources.**

(a) **Internal heating units.** Properly designed and located heating units that do not depend on combustion processes may be used in the building.

(b) **External heating units.** All direct sources of heat must be located outside the mixing building.

WAC 296-52-67130 (Cont.)

(5) **Mixing plant floors** must be made of nonabsorbent materials such as concrete.

(6) **Electrical equipment.**

(a) Electrical switches, controls, motors, and lights located in the mixing room must:

(i) Comply with the requirements of WAC 296-800-280.

(ii) Be located outside the mixing room.

(b) The frame of the mixer and all other equipment must be:

(i) Electrically bonded.

(ii) Provided with a continuous path to ground.

(7) **Internal combustion engines.**

(a) **Location.** All internal combustion engines used for electric power generation must be:

(i) Located outside the mixing plant building.
or
(ii) Properly ventilated and isolated by a firewall.

(b) **Exhaust systems.** Engine exhaust systems must be positioned so spark emission does not become a hazard to any material in or adjacent to the plant.

(8) **Mixing equipment.** Equipment used for mixing blasting agents must comply with the following:

(a) **Design.** The design of the mixer must:

- Minimize the possibility of frictional heating, compaction, and confinement
- Have the bearings and drive assemblies mounted outside the mixer and protected against the accumulation of dust
- Have the surfaces accessible for cleaning

(b) **Construction.** Mixing and packaging equipment must be constructed of materials compatible with the fuel ammonium nitrate composition.

(c) **Fire precautions.** The following fire precautions must be followed:

(i) **Mixer fuel oil flow.** In case of fire:

(A) Appropriate means to prevent the flow of fuel oil to the mixer must be provided

(B) An automatic spring-loaded shutoff valve with fusible link must be installed in gravity flow systems

(ii) **Flame/spark producing devices.** Smoking, matches, open flames, spark-producing devices, and firearms (except firearms carried by law enforcement bomb squad members or qualified guards), are not allowed inside or within 50 feet of any facility used for mixing blasting agents.

(9) **Blasting agent compositions.** The following are requirements for determining blasting agent compositions:

(a) **Determining sensitivity.** The sensitivity of the blasting agent must be determined by means of a Number 8 test detonator at regular intervals and after every change in formulation.

(b) **Handling precautions.** Precautions must be taken when handling:

- Small particle oxidizers, such as crushed ammonium nitrate prills or fines, may be more sensitive than coarser products and must be handled with greater care
- Solid fuels must be used in a manner to minimize dust explosion hazards

WAC 296-52-67130 (Cont.)

- Metal powders, such as aluminum, must be:
  - Kept dry
    or
  - Stored in moisture resistant or weather tight containers or bins

(c) **Use restrictions.** The following cannot be used:

(i) Crude and crankcase oil

(ii) Hydrocarbon liquid fuel with a flash point lower than the 125°F minimum for Number 2 diesel fuel oil
or
(iii) Peroxides and chlorates.

(10) **Fuel oil storage.**

(a) **Facilities.** Fuel oil storage facilities must be:

(i) Independent structures
or
(ii) Located at a site away from the manufacturing building.

(b) **Surrounding area.** In order to prevent oil from draining toward a manufacturing building in the event of a tank rupture, the surrounding grounds must slope away from the building.

(11) **Safety precautions.** Safety precautions at mixing plants must include these requirements:

(a) **Floor construction.** Floors must be constructed to eliminate floor drains and piping where molten materials could flow and be confined, in case of fire.

(b) **Mixing/packaging room.** The floors and equipment of the mixing and packaging room must be cleaned regularly and thoroughly to prevent accumulation of oxidizers, fuels, and other sanitizers.

(c) **Housekeeping.** The following housekeeping requirements must be followed:

(i) **Mixing plant.** The mixing and packaging plant must:

(A) Be cleaned regularly and thoroughly to prevent excessive accumulation of dust

(B) Safely dispose of empty ammonium nitrate bags daily

(ii) **Surrounding area.** The land surrounding the mixing plant must be kept clear of brush, dried grass, leaves, and other materials for a minimum of 25 feet.

(d) **Welding.**

(i) Welding or open flames are not permitted in or around the mixing or storage area of the plant unless:

(A) The equipment or area has been completely washed
and
(B) All oxidizer material has been removed

(ii) Before welding or repairing hollow shafts:

(A) Oxidizer materials must be removed from the inside and outside of the shaft
and
(B) The shaft must be vented with a minimum 1/2-inch diameter opening

(e) **Explosives.** Explosives are not permitted inside or within 50 feet of any facility used for mixing blasting agents.

WAC 296-52-67135 Bulk delivery/mixing vehicles.

Note: This section applies to both off highway operations and public highway transportation.

(1) **Vehicles.** These vehicle requirements must be followed:

(a) **Strength.** A bulk delivery vehicle must be strong enough to carry a load without difficulty.

(b) **Mechanical condition.** A bulk delivery vehicle must be in good mechanical condition.

(c) **Body.** A bulk vehicle body for delivering and mixing blasting agents must:

(i) Be constructed of noncombustible materials.

(ii) Have closed bodies if they are used to transport bulk premixed blasting agents.

(d) **Mixing system parts.**

(i) All moving parts of the mixing system must be designed to prevent heat buildup.

(ii) Shafts or axles which contact the product must have outboard bearings with a minimum of one-inch clearance between the bearings and the outside of the product container. Special attention must be given to the clearances on all moving parts.

(e) **Welding.**

(i) Welding or open flames are not permitted in or around the mixing or storage area of the plant unless the equipment or area has been completely washed and all oxidizer material removed.

(ii) Before welding or repairing hollow shafts:

(A) All oxidizer material must be removed from the inside and outside of the shaft and

(B) The shaft must be vented with a minimum 1/2-inch diameter opening

(2) **Vehicle operation.** Operation of bulk delivery and mixing vehicles must comply with WAC 296-52-680, Transportation of explosive material, U.S. DOT placard requirements, and these requirements:

(a) **Driver training.** The vehicle driver must be:

(i) Trained in the safe operation of the vehicle, mixing, conveying, and related equipment.

(ii) Familiar with the load being delivered and general procedures for handling emergencies.

(b) **Cargo and containers.** Cargo and containers must:

(i) Haul either detonators or other explosives, but not both, it is permitted on bulk trucks provided a special wood or nonferrous-lined container is installed for explosives.

(ii) Be U.S. DOT specified shipping containers, according to 49 CFR Chapter 1.

(c) **Moving a vehicle in the blast area.** When moving a vehicle in the blast area:

(i) The driver must exercise caution to avoid driving the vehicle onto or dragging hoses over firing lines, cap wires, or explosive materials
and

(ii) A second person must help guide the vehicle driver's movements.

(3) **Pneumatic loading.** Pneumatic loading from bulk delivery vehicles into blast holes primed with electric detonators or other static sensitive systems must comply with these requirements:

(a) A positive grounding device must be used to prevent accumulation of static electricity.

WAC 296-52-67135 (Cont.)

(b) A discharge hose must:

(i) Have a resistance range that will prevent conducting stray currents
or
(ii) Be conductive, to bleed off static buildup.

(c) A qualified person must evaluate all static sensitive systems to determine if they will adequately dissipate static under potential field conditions.

(4) **Repairs.** Bulk delivery vehicle repair must comply with the requirements of this section.

(5) **Prohibited activities.** The following are prohibited:

(a) In-transit mixing of materials.

(b) While in or about bulk vehicles in the process of the mixing, transferring or down-the-hole loading of water-gels at or near the blasting site:

(i) Smoking
and
(ii) Carrying flame producing devices including matches and firearms near bulk vehicles in the process of mixing, transferring, or down-the-hole loading of water-gels, at or near the blast site.

WAC 296-52-67140 Bulk storage bins.

(1) **Construction.** A bin, including supports, must be:

(a) Waterproof.

(b) Constructed of compatible materials.

(c) Adequately supported and braced to withstand the combined force of all loads, including impact from product movement within the bin and accidental vehicle contact with the support legs.

(2) **Discharge gates.** A bin discharge gate must be designed to lock and close tightly to prevent leakage of the stored product and to lock.

(3) **Loading manways.** Bin loading manways or access hatches must be hinged or attached to the bin and designed to lock.

(4) **Electric conveyors.** An electrically driven conveyor used for loading or unloading bins must:

(a) Comply with the requirements of WAC 296-800-280, Basic electrical rules.

(b) Be designed to minimize corrosion damage.

(5) **Separation distances.** The following separation distances must be followed:

(a) **Blasting agent bins.** Bins containing blasting agents must meet the distance requirements of:

(i) Table H-20, in reference to separation from inhabited buildings, passenger railroads, and public highways
or
(ii) Table H-22, in reference to separation from other explosives and blasting agent storage facilities.

(b) **Ammonium nitrate bins.** Bins containing ammonium nitrate must meet the distance requirements of Table H-22 in reference to separation of blasting agent and explosives storage.

WAC 296-52-67145 Transportation of blasting agents.

(1) **Public highways.** The following must comply with the United States Department of Transportation's (U.S. DOT) requirements:

(a) Packaging, marking, and labeling containers of blasting agents that are being transported on public highways.

(b) Vehicles must follow placard regulations for transporting blasting agents on public highways.

(2) **Transporting blasting agents and explosives together.** Transportation of blasting agents with explosives in the same vehicle must meet the requirements of WAC 296-52-68060, Operation of vehicles transporting explosives.

(3) **Vehicles.** Vehicles transporting blasting agents must be in safe operating condition at all times.

(4) **Prohibited activities.** The following activities are prohibited:

(a) Carrying matches, firearms, acids, or other corrosive liquids, in the bed or body of any vehicle containing blasting agents.

(b) Allowing anyone who is smoking or under the influence of intoxicants, narcotics, or other dangerous drugs to ride, drive, load, or unload a vehicle, containing blasting agents.

(c) Transporting or carrying blasting agents on any public vehicle that has paying customers.

WATER-GEL AND EMULSION EXPLOSIVES AND BLASTING AGENTS

GENERAL

Note: Water-gels and emulsions must be transported, stored, and used in the same way as explosives or blasting agents according to product classification unless stated otherwise in WAC 296-52-67150, Water-gel and emulsion explosives and blasting agents, through WAC 296-52-67170, Bulk delivery/mixing vehicles.

WAC 296-52-67160 Types and classifications.

(1) **Contains explosive substance.** Water-gel and emulsion explosive materials that contain a substance classified as an explosive must be classified as an explosive.

(2) **Contains no explosive substance.** Water-gel and emulsion explosive materials that do not contain any substance classified as an explosive or as cap-sensitive (as defined under “blasting agent” in WAC 296-52-60130, Definitions) must be classified as an explosive.

Note: Water-gel formulas, which are tested and classified as a U.S. DOT Division 1.2 or 1.3 explosives do not require bullet resistant magazines.

(3) **Contains blasting agent substance.** Water-gel and emulsion explosive materials that do not contain any substance classified as an explosive and are not cap-sensitive (as defined under “blasting agent” in WAC 296-52-60130, Definitions) must be classified as blasting agents **.**

WAC 296-52-67165 Fixed location mixing.

(1) **Buildings.**

(a) **Locations.**

(i) **Separation distance tables.** Buildings or other facilities used for manufacturing emulsions and water-gels must meet the separation distance requirements of Table H-21 for:

(A) Inhabited buildings

(B) Passenger railroads

(C) Public highways

WAC 296-52-67165 (Cont.)

(ii) **Determining distance.** When determining the distances separating highways, railroads, and inhabited buildings from potential explosions (Table H-20), the sum of all masses that may propagate (i.e., lie at distances less than specified in Table H-22) from either individual or combined donor masses are included in the sum. However, when ammonium nitrate must be included, only 50 percent of its weight must be used because of its reduced blast effects.

(b) **Construction.** Buildings used for the manufacture of water-gels or emulsions must:

(i) Be constructed of noncombustible material or sheet metal on wood studs.

(ii) Have mixing plant floors made of nonabsorbent materials, such as concrete.

(iii) Be well ventilated.

(c) **Heat sources.** Heating units that are designed to be independent of the combustion process within the heating unit, may be used within processing buildings or compartments if they:

(i) Have temperature and safety controls
and
(ii) Are located away from combustible materials and the finished product.

(d) **Internal combustion engines.**

(i) **Location.** All internal combustion engines used for electric power generation must be:

(A) Located outside the mixing plant building
or
(B) Properly ventilated and isolated by a firewall

(ii) **Exhaust systems.** Engine exhaust systems must be located to prevent spark emissions from becoming a hazard to any materials, in or near the plant.

(e) **Fuel oil storage.**

(i) **Facilities.** Fuel oil storage facilities must be:

(A) Independent structures

(B) Located away from the manufacturing building

(ii) **Surrounding area.** In order to prevent oil from draining toward a manufacturing building in the event of a tank rupture, the surrounding grounds must slope away from the building.

(2) **Storage of water-gel and emulsion ingredients.**

(a) **Explosive ingredients.** Ingredients must be stored with compatible materials.

(b) **Nitrate water solutions.**

(i) Nitrate water solutions can be stored in tank cars, tank trucks, or fixed tanks without quantity or distance limitations.

(ii) Spills or leaks which may contaminate combustible materials must be cleaned up immediately.

(c) **Metal powders.** Metal powders, for example, aluminum, must be:

(i) Kept dry
and
(ii) Stored in containers or bins that are moisture resistant or weather tight.

WAC 296-52-67165 (Cont.)

(d) **Solid fuels.** Solid fuels must be used in a way that minimizes dust explosion hazards.

(e) **Peroxides and chlorates.** Peroxides and chlorates cannot be used.

(3) **Mixing equipment.** Mixing equipment must comply with these requirements:

(a) **Design.** The design of processing equipment, including mixers, pumps, valves, conveying, and other related equipment, must:

(i) Be compatible with the relative sensitivity of other materials being handled.

(ii) Minimize the possibility of frictional heating, compaction, overloading, and confinement.

(iii) Prevent the introduction of foreign objects or materials.

(iv) Be designed to permit regular and periodic flushing, cleaning, dismantling, and inspection.

(b) **Handling procedures.** Equipment handling procedures must be designed to prevent the introduction of foreign objects or materials.

(c) **Housekeeping.**

(i) A cleaning and collection system for dangerous residues must be provided.

(ii) The mixing, loading, and ingredient transfer areas, where residues or spilled materials may accumulate, must be cleaned periodically.

(d) **Electrical equipment.** Electrical equipment must:

(i) Comply with the requirements of WAC 296-800-280, Basic electrical rules, including wiring, switches, controls, motors, and lights.

(ii) Have appropriate overload protection devices for all electric motors and generators.

(iii) Be electrically bonded with electrical generators, motors, proportioning devices, and all other electrical enclosures.

(iv) Have grounding conductors effectively bonded to:

(A) The service entrance ground connection
or
(B) All equipment ground connections in a manner to provide a continuous path to ground

(4) **Mixing facility fire prevention.** Mixing facilities must comply with these fire prevention requirements:

(a) All direct sources of heat must only come from units located outside of the mixing building.

(b) A daily visual inspection must be made of the mixing, conveying, and electrical equipment to make sure they are in good operating condition.

(c) A systematic maintenance program must be conducted on a regular schedule.

WAC 296-52-67170 Bulk delivery/mixing vehicles.

(1) **Vehicle design.** The design of bulk delivery/mixing vehicles must comply with these requirements:

(a) **Public highways.** Vehicles used for the bulk transportation of emulsion, water-gels, or ingredients classified as dangerous commodities on public highways, must meet:

(i) U.S. DOT regulations, including placard requirements
and
(ii) WAC 296-52-680, Transportation of explosive materials.

WAC 296-52-67170 (Cont.)

(b) **Power supply.** When electric power is supplied by a self-contained motor generator located on the vehicle, the generator must be separate from where the water-gel is discharged.

(c) **Parking brakes and chocks.** The following are requirements for parking brakes and chocks:

(i) A positive action parking brake, which will engage the wheel brakes on at least one axle, must be:

(A) Provided on vehicles equipped with air brakes

(B) Used during bulk delivery operations

(ii) Wheel chocks must supplement parking brakes whenever conditions require.

(2) **Vehicle operation.** Operation of bulk delivery and mixing vehicles must comply with these requirements:

(a) **Driver training.** The vehicle driver must be:

(i) Trained in the safe operation of the vehicle and mixing, conveying, and related equipment.

(ii) Familiar with the supplies being delivered and emergency procedures.

Pneumatic loading.

(b) **Cargo and containers.**

(i) Hauling either detonators or other explosives is permitted on bulk trucks provided a special wood or nonferrous lined container is installed for explosives.

(ii) Detonators and explosives must be in U.S. DOT specified shipping containers, according to 49 CFR Chapter 1.

(c) **Moving a vehicle in the blast area.** When moving a vehicle in the blasting area:

(i) The driver must exercise caution to avoid driving the vehicle onto or dragging hoses over firing lines, cap wires, or explosive materials.
and
(ii) A second person must help guide the vehicle driver's movements.

(d) **Transfer locations.** The location chosen to transfer water-gel or other ingredients from a support vehicle to the drill hole loading vehicle, must be removed from the blast hole site if the drill holes are loaded or are in the process of being loaded.

(e) **Prohibited activities.** The following are prohibited:

(i) In-transit mixing of materials.

(ii) Smoking.
and
Carrying flame-producing devices including matches and firearms near bulk vehicles in the process of mixing, transferring, or down-the-hole loading of water-gels, at or near the blast site.

UNDERWATER BLASTING OPERATIONS

WAC 296-52-67180 Separation distance from vessels and people.

(1) A blast cannot be fired while any moving vessel is within 1500 feet of the blasting area.

(2) People on board vessels or crafts moored or anchored within 1500 feet must be notified before a blast is fired.

WAC 296-52-67185 Swimming and diving activities.

(1) A blast cannot be fired while any swimmers or divers are in the vicinity of the blasting area.

(2) If swimming and diving activities are in progress, a signaling arrangement must be agreed upon to communicate blast warnings prior to blasting.

WAC 296-52-67190 Initiation systems.

Water resistant initiation systems must be used for underwater blasting.

WAC 296-52-67195 Loading tubes and casings.

(1) When a tube is necessary, loading must be done through a nonsparking loading tube.

(2) Loading tubes and casings must be the same type of metal to prevent electric transient currents from occurring as a result of a galvanic reaction of the metals and water.

WAC 296-52-67200 Multiple charges.

(1) When more than one charge is placed underwater, a float device must be attached to an element of each charge to make sure it will be released when the charge is fired.

(2) Blasting flags must be displayed.

(3) Misfires must be handled according to the requirements of WAC 296-52-67110(3), Misfires.

UNDERGROUND BLASTING OPERATIONS

WAC 296-52-67210 Storage.

(1) **Permanent storage.** The following are requirements for permanent storage:

(a) Explosives or blasting agents cannot be permanently stored in an underground operation until at least two exit routes are developed.

(b) Permanent underground storage magazines:

(i) Must be a minimum of three hundred feet from any shaft, adit, or active underground working area.

(ii) Containing detonators must be a minimum of 50 feet away from any magazine containing other explosives or blasting agents.

(2) **Tunnels, shafts, or caissons.** Detonators and explosives cannot be stored or kept in tunnels, shafts, or caissons.

WAC 296-52-67215 Separation distance: Electrical storms.

When an electrical storm is approaching, explosives at the adit, or the top of any shaft leading to where people are working, must be moved to a distance equal to the distance required for inhabited buildings (Table H-20), unless this would create a greater hazard.

WAC 296-52-67220 Proper fume class use.

(1) **Fume Class 1.** Fume Class 1 explosives must be used for underground operations, as specified by the IME.

(2) **Fume Classes 2 and 3.** Explosives complying with the requirements of fume Class 2 and 3 may be used if adequate ventilation is provided.

WAC 296-52-67225 Combustible gases or dusts.

Explosives cannot be loaded or used underground where combustible gases or combustible dusts exist unless approved by the Mine Safety and Health Administration (MSHA).

WAC 296-52-67230 Initiating systems.

(1) **Electric systems.**

(a) **Safety switch.** A safety switch must be:

(i) Placed at intervals in the permanent firing line when firing from a power circuit.

(ii) Made:

(A) So it can only be locked in the "off position"
or
(B) With a short-circuiting arrangement of the firing lines to the detonator circuit

(b) **Lighting gap.** A lighting gap must be:

(i) At least 5 feet ahead (in the firing system) of the main firing switch, between the switch and power source.

(ii) Bridged by a flexible jumper cord just before firing the blast.

WAC 296-52-67235 Firing the blast.

(1) **Employee evacuation.** The blaster must make sure all employees are out of the blast area before firing a blast.

(2) **Guarding entrances.** All entrances:

(a) Leading into the blasting area must be carefully guarded.

(b) To any working place where a drift, raise, or other opening is about to hole through must be carefully guarded.

(3) **Warning signals.** A warning must be given before firing an underground blast. See Table T-1 for signaling requirements **.**

TABLE T-1	
WARNING SIGNAL	A 1 minute series of long blasts 5 minutes prior to blast signal.
BLAST SIGNAL	A series of short blasts 1 minute prior to the shot.
ALL CLEAR SIGNAL	A prolonged blast following the inspection of the blast.

WAC 296-52-67240 Returning to the blast.

(1) **Smoke and fumes.** The blaster in charge must wait a minimum of 15 minutes to allow smoke and fumes to clear before returning to the shot.

(2) **Muck pile.** Workers cannot return to work until the muck pile has been watered down.

WAC 296-52-67245 High speed tunneling: Central primer house.

Note: The following requirements apply when primers are made up at a central primer house for use in high speed tunneling:

(1) **Primers.**

(a) Only enough primer must be made for each round of blasting.

(b) Primers must be placed in separate containers and bins, categorized by the degree of delay in preventing physical impact.

(2) **Separation of explosives in magazines.** Explosives transported in the same magazine must be separated by:

(a) One-quarter inch steel
and
(b) Covered on each side by four inches of hardwood planking or equivalent protection.

PART D
TRANSPORTATION OF EXPLOSIVE MATERIALS

WAC **Page**

WAC 296-52-68010 Public highways. 1
WAC 296-52-68015 Job sites and off highway roads. 1
WAC 296-52-68020 Safety precautions. 1
WAC 296-52-68025 Transportation of workers. 1
WAC 296-52-68030 Cargo. 1
WAC 296-52-68040 Vehicle strength and condition. 1
WAC 296-52-68045 Open top vehicles. 2
WAC 296-52-68050 Vehicle placards. 2
WAC 296-52-68055 Vehicle fire protection. 2
WAC 296-52-68060 Operation of vehicles transporting explosives. 3
WAC 296-52-68065 Transporting detonators and explosives in the same vehicle. 5
WAC 296-52-68075 Powder cars, vehicles, and conveyances. 5
WAC 296-52-68080 Notification--Hoist operator. 6
WAC 296-52-68085 Underground transportation. 6

Note: Requirements for transportation of blasting agents are located at WAC 296-52-67145, Transportation of blasting agents.

SCOPE

WAC 296-52-68010 Public highways.

Transportation of explosives on public highways are:

- Regulated by:
  - United States Department of Transportation (U.S. DOT) (49 CFR, Parts 100 - 199)
  - The Washington utilities and transportation commission
- Administered and enforced by the Washington state patrol.

WAC 296-52-68015 Job sites and off highway roads.

The transportation rules in this chapter apply to:

- On job sites and off highway roads
- Privately financed, constructed, or maintained roads

Note: These rules do not apply to state or interstate highway systems.

WAC 296-52-68020 Safety precautions.

No one may:

- Smoke or carry matches, or any other flame producing device, while in or near a vehicle transporting explosives
- Carry firearms or ammunition while in or near a vehicle transporting explosives, except guards or commissioned law enforcement officers
- Drive, load, or unload a vehicle transporting explosives in a careless or reckless manner.

WAC 296-52-68025 Transportation of workers.

Only authorized personnel properly trained in the safe handling of explosives will be allowed in vehicles transporting explosives, provided seat belts are available for all occupants.

WAC 296-52-68030 Cargo.

Materials and supplies cannot be placed in the cargo space of vehicles or conveyance containing:

- Explosives
- Detonating cord
  or
- Detonators.

Note: It is okay to transport safety fuses and properly secured nonsparking equipment in cargo spaces.

TRANSPORTATION VEHICLES

WAC 296-52-68040 Vehicle strength and condition.

All vehicles used for transporting explosives must:

- Be strong enough to carry the load without difficulty
- Be in good mechanical condition
- Have a tight floor in the cargo compartment(s)
- Not have any exposed spark producing metal inside the vehicle, which could come in contact with explosives.

WAC 296-52-68045 Open top vehicles.

(1) **Locations of use.** While loaded with explosives, open top vehicles must only be used on:

- The job site
  or
- Roads that are closed to public travel

(2) **Containers.** Explosives being transported in open top vehicles or trailers must be transported in:

- The original U.S. DOT approved shipping container or box
  or
- A day box or portable magazine that complies with the requirements of this chapter

(3) **Securing containers.** Explosive containers, boxes, day boxes, or portable magazines must be fastened to the bed of the vehicle or trailer.

(4) **Loading.** Packages of explosives cannot be loaded above the sides on open top vehicles.

(5) **Tarpaulins** (tarps).

- If an explosives transportation vehicle or trailer does not have a fully enclosed cargo area with nonsparking interior, the cargo bed and all explosive cargo must be covered with a flame and moisture proof tarp or other effective protection against moisture and sparks
- Whenever tarps are used for covering explosives, both the tarp and the explosives container must be fastened to the body of the truck bed with rope, wire, or other equally efficient tie downs.

WAC 296-52-68050 Vehicle placards.

All vehicles transporting explosives material must have placards. They must:

- Be displayed as specified by U.S. DOT
- Remain on the vehicle until all explosives have been removed.

WAC 296-52-68055 Vehicle fire protection.

(1) **Fire extinguishers.**

- **Driver training.** The driver must be trained to use the fire extinguishers on the vehicle
- **Equipment specifications.** Vehicles used for transporting explosive materials must be equipped with fire extinguishers according to the gross vehicle weight:

  - Less than 14,000 pounds: A minimum of two multipurpose dry-chemical extinguishers having a combined capacity of at least 4-A:20-B:C
  - 14,000 pounds or greater: A minimum of two multipurpose drychemical extinguishers having a combined capacity of at least 4-A:70-B:C

- **Laboratory approval.** Only fire extinguishers approved by a nationally recognized testing laboratory can be used on vehicles carrying explosives
- **Condition and location.** Fire extinguishers must be filled, ready for immediate use, and easily reached
- **Inspection.** A competent person must inspect fire extinguishers periodically. You must comply with the requirements of WAC 296-800-30020, Inspect and test all portable fire extinguishers.

WAC 296-52-68055 (Cont.)

(2) **Vehicle inspection.** Any motor vehicle used for transporting explosives must have a safety inspection. The inspection must verify that:

- Fire extinguishers are filled and in working order
- All electrical wiring is protected and securely fastened to prevent short circuiting
- Chassis, motor, pan, and underside of body are reasonably clean and free of excess oil and grease
- Fuel tank and feedline are secure and have no leaks
- Tires are checked for proper inflation and defects
- Brakes, lights, horn, windshield wipers, and steering apparatus are functioning properly
- The vehicle is in proper condition in every other respect and acceptable for handling explosives

(3) **Vehicle repair/servicing.** Motor vehicles or conveyances carrying explosives, blasting agents, or blasting supplies cannot be repaired or serviced inside a garage or shop when carrying explosive material.

WAC 296-52-68060 Operation of vehicles transporting explosives.

(1) **Authorized explosives transportation.** Explosives may only be transported by a:

- Licensed manufacturer
- Blaster
- Purchaser, seller, or their designated representative
  or
- Contract carrier for hire who complies with all requirements for transportation of hazardous materials

(2) **Driver qualifications.**

(a) Vehicles transporting explosives must be driven by a responsible licensed driver who is:

- At least21 years old
- Physically fit
- Careful
- Capable
- Reliable
- Able to read and write the English language
- Not addicted to or under the influence of intoxicants, narcotics, or other dangerous drugs. (This does not apply to people taking prescription drugs and/or narcotics as directed by a physician, as long as use of the prescription drug does not endanger the worker or others.)

(b) The driver must be:

- Familiar with all:
  - Traffic regulations
  - Department of Transportation (U.S. DOT) and other state laws in the transportation of explosives and hazardous material laws
- Aware of:
  - What they are carrying
  - Safety precautions for the explosives being transported

WAC 296-52-68060 (Cont.)

(3) **Parking – Division 1.1 or 1.2 explosives.** A vehicle that contains Division 1.1 or 1.2 explosives cannot be parked:

- On or within 5 feet of the traveled portion of a public street or highway
- On private property, including fueling or eating facilities, without the knowledge and consent of the person. The person in charge must be aware of the hazardous materials in the vehicle.
  or
- Within 300 feet of a bridge, tunnel, dwelling, building, or place where people work, congregate, or assemble

Exemption: *These restrictions do not apply when:*

- Routine operations require the vehicle be parked for a brief period of time
- It is impractical to park the vehicle any other place

(4) **Vehicle attendance.** A vehicle transporting any quantity of Division 1.1 or 1.2 explosives must be attended at all times by a driver or other representative of the vehicle carrier, exceptions are:

- A vehicle containing explosive materials may be left unattended for a period not to exceed 48 hours provided:
  - The vehicle is parked in a designated parking lot, which complies with NFPA Std. 498 and the appropriate distance table for the type and quantity of explosives.
- The parking lot must:
  - Be correctly bermed, walled, or fenced, and gated to prevent unauthorized entry
  - Be inspected and approved by the department
  - Provide a full-time, continuous security patrol when explosives are present
- An explosives delivery truck does not need to be attended when it only contains Division 1.5 and no high explosives, provided the:
  - Vehicle is locked so it cannot be moved
  - Cargo compartments are locked to prevent theft
  - Vehicle is parked according to all applicable storage distance requirements
  - Vehicle is located in a secured area that restricts entry of unauthorized personnel

(5) **Attendant.**

(a) An authorized attendant must be physically present and able to see the explosives at all times.

(b) In an emergency, the attendant must be able to quickly get to the explosives without interference.

(c) The attendant must:

- Be awake
- Be alert
- Not be engaged in activities, which could divert their attention
- Be aware of the division of the explosive material and its dangers
- Be instructed in the methods and procedures used to protect the public
- Be familiar with the particular vehicle being driven
- Be trained in the use of the vehicle
- Have authorization and be able to move the vehicle if required

WAC 296-52-68060 (Cont.)

(6) **Loading precautions.** A vehicle must comply with U.S. DOT loading regulations in order to transport explosives in the same vehicle body with the following items:

- Spark producing metal
- Spark producing tools
- Oils
- Matches
- Firearms
- Electric storage batteries
- Flammable substances
- Acids
- Oxidizing materials
  or
- Corrosive compounds

(7) **Congested areas.** Vehicles transporting explosives must avoid congested areas and heavy traffic.

(8) **Disabled vehicles.**

- A qualified person must be present before explosives can be transferred from a disabled vehicle to another vehicle
- If a vehicle becomes disabled in a congested area, you must promptly notify local fire and police authorities. In a remote area they may be notified if necessary.

(9) **Explosives delivery and issue.** Delivery and issue of explosives must be made:

- Only by and to authorized people
- Into authorized magazines or authorized temporary storage or handling areas.

WAC 296-52-68065 Transporting detonators and explosives in the same vehicle.

(1) Fuse type detonators, detonators with a safety fuse, or detonators with a metal clad mild detonating fuse, cannot be transported in the same vehicle or trailer with other explosives, unless they comply with U.S. DOT hazardous material regulations for:

- Packaging
- Separation
- Transportation

(2) Detonators rated as nonmass detonating by U.S. DOT may be transported in the same vehicle or trailer with other explosives when the:

- Detonators are carried in U.S. DOT approved shipping containers
  or
- Truck or trailer complies with the requirements of IME Safety Library Publication Number 22, May 1993.

WAC 296-52-68075 Powder cars, vehicles, and conveyances.

In underground blasting operations, explosives and blasting agents must be hoisted, lowered, or transported in a powder car.

(1) **State approval.** A state-approved powder car or conveyance must be used underground.

WAC 296-52-68075 (Cont.)

(2) **Two-unit compartments.** Compartments for transporting detonators and explosives together on the same conveyance must be physically separated by a:

- Distance of 24 inches
  or
- Solid partition a minimum of 6 inches thick

(3) **Auxiliary lights prohibited.** Auxiliary lights that are powered by an electrical system on a truck bed are prohibited.

(4) **Daily inspection.** The powder car or conveyance must be inspected daily for:

- Properly working lights
- Properly working brakes
- External damage to electrical circuitry

(5) **Weekly inspection.** Weekly inspections must:

- Be conducted on the electrical system, to assess electrical hazards
- Include a written inspection certification record that:
  - Contains the date of inspection, the serial number, or other positive identification of the unit being inspected, and the signature of the person performing the inspection
  - Is kept on file for the duration of the job

(6) **Explosives warning sign.** Powder cars or conveyance built for transporting explosives or blasting agents must have signs posted on each side of the car that:

- State "EXPLOSIVES"
- Use letters a minimum of 4 inches high
- Have a background color that sharply contrasts with the letters.

WAC 296-52-68080 Notification--Hoist operator.

Hoist operators must be notified before explosives or blasting agents are transported in a shaft conveyance.

WAC 296-52-68085 Underground transportation.

(1) **Explosives and blasting agents.** These requirements must be followed when transporting explosives and blasting agents underground:

- **Companion items.**
  - Explosives or blasting agents cannot be transported in the same shaft conveyance with other materials, supplies, or equipment
  - Detonators and other explosives cannot be transported in the same shaft conveyance
- **Manual transportation.** Explosives or blasting agents that are not in their original containers must be placed in a suitable container when transported manually
- **Car or conveyance.** The car or conveyance containing explosives or blasting agents must be pulled and not pushed
- **Locomotives.** Explosives or blasting agents must:
  - Not be transported on any locomotive
  - Be separated by a minimum of 2 car lengths from the locomotive

WAC 296-52-68085 (Cont.)

- **Riding on a conveyance.** When transporting explosives or blasting agents, no one can ride on:
  - A shaft conveyance
    or
  - Any other conveyance, except the operator, helper, or powder person
- **Crew haul trips.** Explosives or blasting agents cannot be transported on a crew haul trip
- **Disposition arrival.** All explosives or blasting agents that are transported underground must immediately be taken to the place of use or storage.

(2) **Quantity limit.** The quantity of explosives or blasting agents taken to an underground loading area cannot exceed the amount estimated to be necessary for the blast.

(3) **Unloading primers at the blast site.** Primers must be:

- Unloaded after drilling has been completed and the holes in the round are ready for loading
- Unloaded from the powder car at the face or heading
- Removed from the powder car for only the exact number being used for the round
- The powder car must be removed from the tunnel after the charge has been loaded

(4) **Electric detonators.** Wires on electric detonators must be kept shunted until wired to the bus wires.

PART E
STORAGE OF EXPLOSIVE MATERIALS

LAST UPDATED 05/01/2014

WAC **Page**

WAC 296-52-69005 Detonators. 1
WAC 296-52-69010 Explosives. 1
WAC 296-52-69015 Exempt explosives. 1
WAC 296-52-69020 Storage facilities. 1
WAC 296-52-69025 Quantity and distance tables. 2
WAC 296-52-69030 Storage within magazines. 2
WAC 296-52-69035 Storage limits. 3
WAC 296-52-69040 Notification of fire safety authority. 3
WAC 296-52-69045 Magazine repairs. 3
WAC 296-52-69050 Inventory. 4
WAC 296-52-69055 Inspection. 4
WAC 296-52-69060 Precautions for areas surrounding magazine. 5
WAC 296-52-69065 Deteriorated explosives. 6
WAC 296-52-69070 Explosives recovered from misfires. 6
WAC 296-52-69080 Blast site storage. 6
WAC 296-52-69085 Multiple magazines. 6
WAC 296-52-69090 Blasting agents and supplies. 7
WAC 296-52-69095 Ammonium nitrate. 8
WAC 296-52-69105 Table H-20--Table of distances for storage of explosives. 12
WAC 296-52-69110 Table H-21--Quantity and distance table for separation between magazines. 15
WAC 296-52-69115 Table H-22--Separation distances of ammonium nitrate and blasting agents from explosives or blasting agents. 18
WAC 296-52-69120 Table H-23--Quantity and distance tables for manufacturing buildings. 20
WAC 296-52-69125 Table H-24--Low explosives. 23
WAC 296-52-69130 Table of distances for the storage of display fireworks (except bulk salutes). 24

WAC 296-52-69005 Detonators.

Detonators must not be stored in magazines where other explosives are stored.

WAC 296-52-69010 Explosives.

All Division 1.1, 1.2, 1.3, and 1.4 explosives, special industrial explosives, and any newly developed unclassified explosives, must be kept in magazines that meet the requirements of RCW 70.74.120 and this chapter, unless the explosives are:

- In the manufacturing process
- Being physically handled
- Being used at the blast site
  or
- Being transported to a place of storage or use.

WAC 296-52-69015 Exempt explosives.

Explosives exempt from these storage requirements are:

Type of Explosive	Exempted Amount
Stocks of: • Small arms ammunition, • Propellant-actuated power cartridges, and • Small arms ammunition primers	Quantities less than 750,000
Smokeless powder	Quantities less than 150 pounds
Black powder (as used in muzzleloading firearms)	Quantities less than 5 pounds
Explosive-actuated power devices	Quantities less than 50 pounds net weight of explosives
Fuse lighters and igniters	(not applicable)
Safety fuses (except cordeau detonant fuses)	(not applicable)

WAC 296-52-69020 Storage facilities.

Explosives, except as specified in WAC 296-52-69015, and detonators in quantities of more than one thousand must be stored in permanent Type 1 magazines or approved and licensed magazines.

Note 1: Components storage.

Any2 components which when mixed and become capable of detonation by a #8 detonator must be stored in a licensed approved magazine. Each component of 2 component explosives when unmixed must be stored in separate locked containers..

Note 2: Electromagnetic radiation precautions.

Blasting operations or storage of electrical detonators are prohibited in the area of operation radio frequency (RF) transmitter stations except where the clearances (WAC 296-52-67060, Extraneous electricity and radio frequency (RF) transmitters) can be observed.

Note 3: Detonators, electric detonators, detonating primers, and primed cartridges.

Detonators, electric detonators, detonating primers, and primed cartridges cannot be stored together or in the same magazine with other explosives.

WAC 296-52-69020 (Cont.)

Note 4: Ammonium perchlorate rocket motors.

Ammonium perchlorate rocket motors in 62.5 grams amounts or greater, but not to exceed 50 pounds in total weight of explosives, may be stored in an attached garage of a single-family residence if the living area is separated by a fire wall with one-hour minimum fire resistance .

WAC 296-52-69025 Quantity and distance tables.

All explosive manufacturing buildings and magazines that store explosives or blasting agents (except small arms ammunition and smokeless powder), must meet the requirements as specified in:

- Table H-20, Distances for Storage of Explosives
- Table H-21, Distance Table for Separation between Magazines
- Table H-22, Separation Distance of Ammonium Nitrate and Blasting Agent from Explosives or Blasting Agents.

WAC 296-52-69030 Storage within magazines.

(1) **Storage materials.** Magazines cannot be used for storage of metal tools or any commodity other than:

- Explosives
- Blasting agents
- Blasting supplies

(2) **Black powder.**

- Black powder must be stored separately from other explosives in a magazine
- Kegs must be stored on end, bungs down, on sides, seams down

(3) **Age/or date mark.** Explosives that are not already age/or date marked by the manufacturer, must be marked with the manufacturing date before being stored in the magazine.

Note: Unidentified explosives confiscated by law enforcement may be marked with the confiscation date, if the manufacturer's date is unknown.

(4) **Grades and brands.**

- Identical grades and brands of explosives must be stored together, with the brands and grade marks showing
- Explosive materials must be stored so they can be easily checked and counted

(5) **Package placement.** Explosive packages must be:

- Placed right side up
- Stacked so they are stable

(6) **Ventilation.** Explosive material cannot be:

- Stored where they could interfere with ventilation
  or
- Placed less than 2 inches from the interior walls

Note: Nonsparking lattice or other nonsparking material may be used to prevent contact of stored explosive material with interior walls.

(7) **Housekeeping.**

- Magazine floors must be:
  - Regularly swept and the sweepings properly disposed of
  - Kept clean and dry
  - Free of grit, paper, and used packages or rubbish

WAC 296-52-69030 (Cont.)

- Brooms and other cleaning tools cannot have any spark producing metal parts
- Floors stained with nitroglycerin must be cleaned according to the manufacturer's instructions

(8) **Unpacking or repacking explosives.**

- Containers of explosives (except for fiberboard or other nonmetal containers) cannot be unpacked or repacked:
  - In a magazine
  - Within 50 feet of a magazine
    or
  - Near other explosives
- Opened packages of explosives must be securely closed before returning them to a magazine
- Tools used for opening packages of explosives must be constructed of nonsparking materials
- A wood wedge and a fiber, rubber, or wood mallet must be used for opening or closing wooden crates of explosives.

WAC 296-52-69035 Storage limits.

More than 300,000 pounds of explosive materials or 20,000,000 of detonators cannot be stored in the same storage magazine.

WAC 296-52-69040 Notification of fire safety authority.

Any person who stores explosive material must notify the local fire safety authority, who has jurisdiction over the area where the explosive material is stored.

(1) The local fire safety authority must be notified:

- Orally, on the first day explosive materials are stored
- In writing, within 48 hours, from the time the explosive material was stored
- In writing when an explosive storage license is renewed.

(2) The notification must include the following for each site where explosive material is stored:

- Type of explosives
- Magazine capacity
- Location.

WAC 296-52-69045 Magazine repairs.

Before beginning repair activities that could cause sparks or fire:

- All explosives must be removed from the magazine under repair and placed in another magazine or a safe distance away
- Explosives must be properly guarded until they are returned to the magazine
- The floor must be cleaned before beginning repairs inside a magazine.

WAC 296-52-69050 Inventory.

(1) A qualified person must be:

- Responsible for the magazine at all times
- At least 21 years old
- Held responsible for the enforcement of all safety requirements

(2) Explosives must:

- Be accounted for at all times
- Be kept in a locked magazine when not in use
- Not be easily accessed by unauthorized persons

(3) Inventory and use records must be kept up to date for all explosives.

(4) Any person responsible for explosives who discovers a theft or loss of explosives must report the incident to local law enforcement within 24 hours.

(5) Law enforcement agencies must report a theft or loss of explosives to the department immediately.

(6) Other people who know of attempted or actual unauthorized magazine entry must report this information to local law enforcement.

WAC 296-52-69055 Inspection.

(1) **Weekly inspection.**

(a) The person or company responsible for the contents of the magazine must inspect the magazine at least every 7 days to determine whether there has been an unauthorized:

- Attempted entry into the magazine
  or
- Removal of explosives from the magazine

(b) The person doing the inspection must be familiar with the magazine and its contents.

Note: This inspection does not need to be an inventory.

(2) **Inspection documentation.**

(a) The person doing the inspection must sign one of the following documents after completing the inspection:

- A weekly inspection log
- An inventory sheet
  or
- Other record

(b) Weekly inspection records must be kept for at least one year.

- Be kept clear of rubbish, brush, dry grass, or trees, except live trees more than 10 feet tall, for a minimum of 25 feet in all directions
- Be free of volatile materials for a minimum of 50 feet from outdoor magazine
- Have the ground around storage facilities slope away for drainage, living foliage does not need to be removed.

(3) **Fire sources.** Smoking, matches, open flames, and spark producing devices are not permitted:

- In any magazine
- Within 50 feet of an outdoor magazine
  or
- In any room containing an indoor magazine

WAC 296-52-69055 (Cont.)

(4) **Warning sign.**

(a) **Access routes.** All normal access routes to explosive material storage facilities, except Class 3 (1.4) magazines, must be posted with warning signs that read:

DANGER
NEVER FIGHT EXPLOSIVE FIRES
EXPLOSIVES ARE STORED ON THIS SITE
CALL

(b) **Sign specifications and placement.** Signs must:

(i) Be contrasting in color

(ii) Have the pin stroke of the letters a minimum of three inches (75 mm) high and one-half inch (12.5 mm) wide

(iii) Be placed so a bullet passing through the sign will not strike a magazine

(iv) Not be attached to magazines

(c) **Transportation placards.** Placards required by the U.S. Department of Transportation (DOT) (49 CFR) for transporting blasting agents must be displayed on all Class 5 magazines where blasting agents are stored.

WAC 296-52-69060 Precautions for areas surrounding magazine.

(1) **Firearms.** Only qualified guards and qualified law enforcement officers are allowed to carry firearms inside or within 50 feet of a magazine.

(2) **Area maintenance.** The area surrounding magazines must:

- Be kept clear of rubbish, brush, dry grass, or trees, except live trees more than 10 feet tall, for a minimum of 25 feet in all directions
- Be free of volatile materials for a minimum of 50 feet from outdoor magazine
- Have the ground around storage facilities slope away for drainage, living foliage does not need to be removed.

(3) **Fire sources.** Smoking, matches, open flames, and spark producing devices are not permitted:

- In any magazine
- Within 50 feet of an outdoor magazine
  or
- In any room containing an indoor magazine

(4) **Warning sign.**

(a) **Access routes.** All normal access routes to explosive material storage facilities, except Class 3 (1.4) magazines, must be posted with warning signs that read:

DANGER
NEVER FIGHT EXPLOSIVE FIRES
EXPLOSIVES ARE STORED ON THIS SITE
CALL

WAC 296-52-69060 (Cont.)

(b) **Sign specifications and placement.** Signs must:

(i) Be contrasting in color

(ii) Have the pin stroke of the letters a minimum of three inches (75 mm) high and one-half inch (12.5 mm) wide

(iii) Be placed so a bullet passing through the sign will not strike a magazine

(iv) Not be attached to magazines

(c) **Transportation placards.** Placards required by the U.S. Department of Transportation (DOT) (49 CFR) for transporting blasting agents must be displayed on all Class 5 magazines where blasting agents are stored.

WAC 296-52-69065 Deteriorated explosives.

- Explosives must be immediately destroyed, according to the manufacturer's recommendations, whenever they are suspected of deteriorating to the point they are:
  - Unstable
  - Dangerous
  - Leaking nitroglycerine
- Only a licensed blaster may destroy explosives.

WAC 296-52-69070 Explosives recovered from misfires.

- **Storage.** Explosives recovered from misfires must be placed in a separate licensed magazine until they can be disposed of according to the manufacturer's recommendations
- **Detonator use.** Detonators suspected of being defective cannot be reused
- **Disposal.** The blaster in charge must dispose of explosives and detonators according to the manufacturer’s recommendations.

WAC 296-52-69080 Blast site storage.

(1) **Location.** Temporary storage for explosives at blast sites must be located away from:

- Inhabited buildings
- Railways
- Highways
- Other magazines

(2) **Separation distance.** A distance must be maintained between magazines and the blast site. This distance must be a minimum of:

- 150 feet when the quantity of explosives is greater than 25 pounds
- 50 feet when the quantity of explosives is 25 pounds or less.

WAC 296-52-69085 Multiple magazines.

(1) **Separation distance.** When two or more storage magazines are located on the same property, each magazine must comply with the minimum quantity of explosives and separation distance requirements for:

- Magazines (Table H-21)
- Inhabited buildings, railways, and highways (Table H-20)

WAC 296-52-69085 (Cont.)

(2) **Distances that do not meet requirements.** If the separation distance between two or more magazines is less than the distance required (Table H-21), the magazines must:

- Be considered one magazine
  and
- Comply with the minimum distance requirements for inhabited buildings, railways, and highways (Table H-20)

(3) **Distance of grouped magazines to other magazines.** Each magazine in a group must comply with minimum magazine distance requirements (Table H-21) in relation to other magazines not considered part of the group.

(4) **Quantity of explosives.**

(a) **Magazine group.** The total quantity of explosives stored in a magazine group (2 or more) must:

- Be considered one magazine
- Not exceed the requirements of Table H-21 for one magazine

(b) **Detonator magazine.** The quantity of explosives contained in a detonator magazine takes precedence over the minimum magazine distance requirements (Table H-21) when determining the separation distance required between a detonator magazine and magazines that contain other types of explosives.

(c) **Detonator strength.** Strengths of blasting and electric detonators:

- Up to #8 detonators must be rated as one and one-half pounds of explosives per 1000 detonators
- Detonators greater than #8 must be computed on the combined weight of explosives.

WAC 296-52-69090 Blasting agents and supplies.

(1) **Storage.**

Note: You may store blasting agents with nonexplosive blasting supplies.

(a) When stored with explosives, blasting agents or ammonium nitrate must be stored as required in magazine construction.

(b) When computing the total quantity of explosives, the mass of blasting agents and one-half the mass of ammonium nitrate must be included when determining the distance requirements.

(c) When stored separately from explosives, blasting agents and ammonium nitrate must be stored as required in this chapter
or
Warehouses which are:

- One story without basements
- Noncombustible or fire resistant
- Constructed so there are no open floor drains and piping where molten materials could flow and be trapped in case of fire
- Weather resistant
- Well ventilated
- Equipped with a strong door which is securely locked except when open for business

WAC 296-52-69090 (Cont.)

(d) Semi-trailer or full trailer vans used for highway or on-site transportation of blasting agents. They must:

- Comply with location requirements for inhabited buildings, passenger railways, and public highways in Table H-20
- Be in accordance with the distance requirements in Table H-22
- Have substantial means for locking and the trailer doors must be kept locked except during the time of placement or removal of blasting agents

(e) Storage warehouses for blasting agents:

- Must comply with the location requirements for inhabited buildings, passenger railways, and public highways in Table H-20
- Must be in accordance with the distance requirements in Table H-22

(f) Combustible materials, flammable liquids, corrosive acids, chlorates, or nitrates cannot be stored in warehouses used for blasting agents unless they are separated by a fire resistant wall with a minimum of one-hour fire resistance.

(g) A competent person, at least 21 years old, must supervise every warehouse used for the storage of blasting agents.

(2) **Combustible materials.** These activities and items are prohibited within 50 feet (15.2 m) of any warehouse used for storing blasting agents:

- Smoking
- Matches
- Open flames
- Spark producing devices

(3) **Housekeeping.** The interiors of warehouses used for storing blasting agents must be:

- Kept clean, and free from debris and empty containers
- All spilled materials must be promptly cleaned.

WAC 296-52-69095 Ammonium nitrate.

(1) **Storage.**

(a) Ammonium nitrate storage requirements do not apply to:

- The transportation of ammonium nitrates while under the jurisdiction of and in compliance with U.S. DOT regulations (see 49 CFR, Part 173)
- The storage of ammonium nitrates while under the jurisdiction of and in compliance with U.S. Coast Guard (see 49 CFR, Parts 146-149)
- The storage of ammonium nitrate and ammonium nitrate mixtures, which are more sensitive than allowed by the bulletin
  "Definition and test procedures for ammonium nitrate fertilizers" from the Fertilizer Institute, 501 2nd Street N.E., Washington, D.C. 20006.
  This definition limits the contents of organic materials, metals, sulfur, etc., in products that may be classified ammonium nitrate fertilizer.
- The production of ammonium nitrate or the storage of ammonium nitrate on the premises of the producing plant, if no hazards are created to the employees or public
- The standards for ammonium nitrate (nitrous oxide grade) that are found in the: "Specifications, properties and recommendations for packaging, transportation, storage and use of ammonium nitrate," from the Compressed Gas Association, Inc., 1235 Jefferson Davis Highway, Suite 1004, Arlington, VA 22202-4100.

WAC 296-52-69095 (Cont.)

(b) Ammonium nitrate storage requirements apply to:

- Anyone, in addition to the owner or lessee of any building, premises, or structure having or storing ammonium nitrate in quantities of 1000 pounds (425 kg) or more
- Ammonium nitrate in the form of crystals, flakes, grains, or prills including fertilizer grade, dynamite grade, nitrous oxide grade, technical grade, and other mixtures containing sixty percent or more ammonium nitrate by weight

Note: The approval of large quantity storage is based on the fire and explosion hazards, including exposure to toxic vapors from burning or decomposing ammonium nitrate.

(c) Storage buildings housing ammonium nitrate must:

- Have adequate ventilation or be self-ventilating in the event of a fire
- Have fire resistant walls when the exposed side of a storage building is within 50 feet (15.2 m) of a combustible building, forest, piles of combustible materials, and similar exposure hazards. Other suitable means of exposure protection such as a freestanding wall may be used instead of a fire resistant wall
- Have roof coverings that are Division 1.4 or better as defined in Roof Coverings, NFPA 203M-1970
- Have flooring of noncombustible material or be protected against saturation by ammonium nitrate. In case of fire, the floor must not have open drains, traps, tunnels, pits, or pockets into which molten ammonium nitrate could flow and be confined
- Be dry and free from water seepage through the roof, walls, and floors
- Not have basements, unless the basements are open on at least one side
- Not be over one story in height

Note: The continued use of an existing storage building or structure may be approved in cases where continued use will not constitute a hazard to life or adjoining property.

Bags, drums, and other containers of ammonium nitrate must:

(d) Comply with specifications and standards required for use in interstate commerce (see 49 CFR, Chapter 1). Containers used on the premises in the actual manufacturing or processing do not need to comply.

- Not be used for storage when the temperature of the ammonium nitrate exceeds 130°F (54.4°C)
- Not be stored within 30 inches (76 cm) of the storage building walls and partitions
- Not be stacked higher than 20 feet (6.1 m) in height, 20 feet (6.1 m) in width, and 50 feet (15.2 m) in length. When buildings are constructed of noncombustible materials or protected by automatic sprinklers, there are no stacking height restrictions
- Never be stacked closer than 36 inches (.09 m) below the roof or overhead supporting and spreader beams
- Be separated by aisles a minimum of three feet wide. There must be one main aisle in the storage area a minimum of 4 feet (1.2 m) wide

WAC 296-52-69095 (Cont.)

(e) Bulk ammonium nitrate must be stored:

- In warehouses with adequate ventilation or be capable of adequate ventilation in case of fire
- In structures that are not more than 40 feet (12.2 m) high, unless:
  - They are constructed of noncombustible material
    or
  - Have adequate facilities for fighting a roof fire
- In clean bins that are free of materials that could cause contamination
- In bins or piles that are clearly identified by signs reading "AMMONIUM NITRATE" in letters a minimum of 2 inches (5 cm) high
- In bins or piles sized and arranged so all material is moved periodically to minimize the possibility of caking
- Adequately separated from easily combustible fuels. Bins cannot be made of galvanized iron, copper, lead, and zinc because of the:
  - Corrosive and reactive properties of ammonium nitrate
    and
  - To avoid contamination
- In tightly constructed wooden and aluminum bins that are protected against saturation from ammonium nitrate
- In tightly constructed partitions that divide the ammonium nitrate from other products to avoid contamination
- Where the temperature of the product does not exceed 130°F (54.4°C)
- No higher than 36 inches (0.9 m) below the roof or overhead supporting and spreader beams if stacked in piles. Stack items (height and depth), should be determined by the pressure setting tendency of the product

(f) Bulk ammonium nitrate when caked, cannot be broken up or loosed by the use of dynamite, other explosives or blasting agents.

(g) Bulk ammonium nitrate cannot be stored with:

- LP Gas on the premises except when such storage complies with WAC 296-24-475, Storage and handling of liquefied petroleum gases
- Sulfur and finely divided metals in the same building except when such storage complies with this chapter and NFPA standard 495, Explosives Materials Code
- Explosives and blasting agents in the same building except on the premises of manufacturers, distributors, and user of explosives or blasting agents
- When explosives or blasting agents are stored in separate buildings, other than on the approval of manufacturers, distributors, and user, they must be separated from the ammonium nitrate by the distances and/or barricades specified in Table H-22 or a minimum of 50 feet (15.2 m)
- With flammable liquids, such as gasoline, kerosene, solvents, and light fuel oils on the premises except when such storage conforms to WAC 296-24-330, Flammable liquids, and when walls, sills or curbs are provided in accordance with WAC 296-52-69095, Ammonium nitrate

WAC 296-52-69095 (Cont.)

(2) Contaminants must be stored in a separate building from ammonium nitrate
or
Be separated by an approved firewall of not less than one-hour fire resistance rating which should extend to the underside of the roof. Alternatively, the contaminants may be separated by a minimum of 30 feet (9.1 m), instead of using walls. These contaminants are:

- Organic chemicals
- Acids
- Other corrosive materials
- Materials that may require blasting during processing or handling
- Compressed flammable gases
- Flammable and combustible materials
- Other substances including:

Animal fats	Baled cotton	Baled rags	Baled scrap paper
Bleaching powder	Burlap or cotton bags	Caustic soda	Coal
Coke	Charcoal	Cork	Camphor
Excelsior	Fibers of any kind	Fish oil	Fish meal
Foam rubber	Hay	Lubricating oil	Linseed oil
Other oxidizable or drying oils	Naphthalene	Oakum	Oiled clothing
Oiled paper	Oiled textiles	Paint	Straw
Sawdust	Wood shavings	Vegetable oil	

(3) Housekeeping requirements must have:

- Electrical installations, which meet the requirements of chapter 296-24 WAC, Part L, Electrical, and WAC 296-800-280, Basic electrical rules, for ordinary locations and be designed to minimize damage from corrosion
- Adequate lightning protections in areas where lightning storms are prevalent (see NFPA 78-1992, Lightning Protection Code)
- Procedures to prevent unauthorized personnel from entering the ammonium nitrate storage area

(4) Fire protection must provide:

- Water supplies and fire hydrants
- Suitable fire control devices, such as a small hose or portable fire extinguishers, throughout the warehouse and in the loading/unloading areas. These devices must comply with the requirements of WAC 296-800-300, Portable fire extinguishers, and WAC 296-24-602, Standpipe and hose systems
- Approved sprinkler systems installed according to WAC 296-24-607, Automatic sprinkler systems
- 2500 tons (two thousand two hundred seventy metric) or less of bagged ammonium nitrate may be stored in a structure that does not have an automatic sprinkler system.

QUANTITY AND DISTANCE TABLES

WAC 296-52-69105 Table H-20--Table of distances for storage of explosives.

Table H-20 Table of Distances for Storage of Explosives							
Quantity of Explosive		**Distances (in Feet)**					
(In Pounds)		Inhabited Buildings		Public Highways with Traffic Volume 3,000 or Less Vehicles Per Day		Passenger Railways and Public Highways: With Traffic Volume of More Than 3,000 Vehicles Per Day	
Over	**Not Over**	**Barricaded**	**Unbarricaded**	**Barricaded**	**Unbarricaded**	**Barricaded**	**Unbarricaded**
0	5	70	140	30	60	51	102
5	10	90	180	35	70	64	128
10	20	110	220	45	90	81	162
20	30	125	250	50	100	93	186
30	40	140	280	55	110	103	206
40	50	150	300	60	120	110	220
50	75	170	340	70	140	127	254
75	100	190	380	75	150	139	278
100	125	200	400	80	160	150	300
125	150	215	430	85	170	159	318
150	200	235	470	95	190	175	350
200	250	255	510	105	210	189	378
250	300	270	540	110	220	201	402
300	400	295	599	120	240	221	442
400	500	320	640	130	260	238	476
500	600	340	680	135	270	253	506
600	700	355	710	145	290	266	532
700	800	375	750	150	300	278	556
800	900	390	780	155	310	289	578
900	1,000	400	800	160	320	300	600
1,000	1,200	425	850	165	330	318	636
1,200	1,400	450	900	170	340	336	672
1,400	1,600	470	940	175	350	351	702

WAC 296-52-69105 (Cont.)

1,600	1,800	490	980	180	360	366	732
1,800	2,000	505	1,010	185	370	378	756
2,000	2,500	545	1,090	190	380	408	816
2,500	3,000	580	1,160	195	390	432	864
3,000	4,000	635	1,270	210	420	474	948
4,000	5,000	685	1,370	225	450	513	1,026
5,000	6,000	730	1,460	235	470	546	1,092
6,000	7,000	770	1,540	245	490	573	1,146
7,000	8,000	800	1,600	250	500	600	1,200
8,000	9,000	835	1,670	255	510	624	1,248
9,000	10,000	865	1,730	260	520	645	1,290
10,000	12,000	875	1,750	270	540	687	1,374
12,000	14,000	885	1,770	275	550	723	1,446
14,000	16,000	900	1,800	280	560	756	1,512
16,000	18,000	940	1,880	285	570	786	1,572
18,000	20,000	975	1,950	290	580	813	1,626
20,000	25,000	1,055	2,000	315	630	876	1,752
25,000	30,000	1,130	2,000	340	680	933	1,866
30,000	35,000	1,205	2,000	360	720	931	1,962
35,000	40,000	1,275	2,000	380	760	1,026	2,000
40,000	45,000	1,340	2,000	400	800	1,068	2,000
45,000	50,000	1,400	2,000	420	840	1,104	2,000
50,000	55,000	1,460	2,000	440	880	1,140	2,000
55,000	60,000	1,515	2,000	455	910	1,173	2,000
60,000	65,000	1,565	2,000	470	940	1,206	2,000
65,000	70,000	1,610	2,000	485	970	1,236	2,000
70,000	75,000	1,655	2,000	500	1,000	1,263	2,000
75,000	80,000	1,695	2,000	510	1,020	1,293	2,000

WAC 296-52-69105 (Cont.)

80,000	85,000	1,730	2,000	520	1,040	1,317	2,000
85,000	90,000	1,760	2,000	530	1,060	1,344	2,000
90,000	95,000	1,790	2,000	540	1,080	1,368	2,000
95,000	100,000	1,815	2,000	545	1,090	1,392	2,000
100,000	110,000	1,835	2,000	550	1,100	1,437	2,000
110,000	120,000	1,855	2,000	555	1,110	1,479	2,000
120,000	130,000	1,875	2,000	560	1,120	1,521	2,000
130,000	140,000	1,890	2,000	565	1,130	1,557	2,000
140,000	150,000	1,900	2,000	570	1,140	1,593	2,000
150,000	160,000	1,935	2,000	580	1,160	1,629	2,000
160,000	170,000	1,965	2,000	590	1,180	1,662	2,000
170,000	180,000	1,990	2,000	600	1,200	1,695	2,000
180,000	190,000	2,010	2,010	605	1,210	1,725	2,000
190,000	200,000	2,030	2,030	610	1,220	1,755	2,000
200,000	210,000	2,055	2,055	620	1,240	1,782	2,000
210,000	230,000	2,100	2,100	635	1,270	1,836	2,000
230,000	250,000	2,155	2,155	650	1,300	1,890	2,000
250,000	275,000	2,215	2,215	670	1,340	1,950	2,000
275,000	300,000	2,275	2,275	690	1,380	2,000	2,000

Note 1: Terms used in Table H-20 are found in WAC 296-52-60130, Definitions.

Note 2: Source of table data is BATF (6/90) 55.218.

WAC 296-52-69110 Table H-21--Quantity and distance table for separation between magazines.

Note: This table applies to the permanent storage of commercial explosives only. It does not apply to:

- *Explosives handling*
- *Explosives transportation*
- *Temporary storage of explosives*
- *Bombs, projectiles, or other heavily encased explosives*

Magazines containing detonators and electric detonators must be separated from:

(1) Other magazines with similar contents.
or
(2) Magazines containing explosives.

Note: Definitions of barricade including artificial and natural barricade can be found in WAC 296-52-60130, Definitions.

Table H-21			
QUANTITY AND DISTANCE TABLE FOR SEPARATION BETWEEN MAGAZINES CONTAINING EXPLOSIVES		Separation Distance in Feet Between Magazines	
Pounds Over	Pounds Not Over	Not Barricaded	Barricaded
2	5	12	6
5	10	16	8
10	20	20	10
20	30	22	11
30	40	24	12
40	50	28	14
50	75	30	15
75	100	32	16
100	125	36	18
125	150	38	19
150	200	42	21
200	250	46	23
250	300	48	24
300	400	54	27
400	500	58	29
500	600	62	31

WAC 296-52-69110 (Cont.)

600	700	64	32
700	800	66	33
800	900	70	35
900	1,000	72	36
1,000	1,200	78	39
1,200	1,400	82	41
1,400	1,600	86	43
1,600	1,800	88	44
1,800	2,000	90	45
2,000	2,500	98	49
2,500	3,000	104	52
3,000	4,000	116	58
4,000	5,000	122	61
5,000	6,000	130	65
6,000	7,000	136	68
7,000	8,000	144	72
8,000	9,000	150	75
9,000	10,000	156	78
10,000	12,000	164	82
12,000	14,000	174	87
14,000	16,000	180	90
16,000	18,000	188	94
18,000	20,000	196	98
20,000	25,000	210	105
25,000	30,000	224	112
30,000	35,000	238	119
35,000	40,000	248	124
40,000	45,000	258	129

WAC 296-52-69110 (Cont.)

45,000	50,000	270	135
50,000	55,000	280	140
55,000	60,000	290	145
60,000	65,000	300	150
65,000	70,000	310	155
70,000	75,000	320	160
75,000	80,000	330	165
80,000	85,000	340	170
85,000	90,000	350	175
90,000	95,000	360	180
95,000	100,000	370	185
100,000	110,000	380	195
110,000	120,000	410	205
120,000	130,000	430	215
130,000	140,000	450	225
140,000	150,000	470	235
150,000	160,000	490	245
160,000	170,000	510	255
170,000	180,000	530	265
180,000	190,000	550	275
190,000	200,000	570	285
200,000	210,000	590	295
210,000	230,000	630	315
230,000	250,000	670	335
250,000	275,000	720	360
275,000	300,000	770	385

Note: With site-specific department approval, a stand of mature timber may qualify as a natural barricade. The timber must be dense enough so the area requiring protection cannot be seen from the magazine when the trees are bare of leaves.

WAC 296-52-69115 Table H-22--Separation distances of ammonium nitrate and blasting agents from explosives or blasting agents.

Table H-22 Table of separation distances of ammonium nitrate and blasting agents FROM EXPLOSIVES OR BLASTING AGENTS[1]				
Donor weight		Minimum separation distance of receptor when barricaded[2] (ft.)		Minimum thickness of artificial barricades[5] (in.)
Pounds over	Pounds not over	Ammonium nitrate[3]	Blasting agent[4]	
	100	3	11	12
100	300	4	14	12
300	600	5	18	12
600	1,000	6	22	12
1,000	1,600	7	25	12
1,600	2,000	8	29	12
2,000	3,000	9	32	15
3,000	4,000	10	36	15
4,000	6,000	11	40	15
6,000	8,000	12	43	20
8,000	10,000	13	47	20
10,000	12,000	14	50	20
12,000	16,000	15	54	25
16,000	20,000	16	58	25
20,000	25,000	18	65	25
25,000	30,000	19	68	30
30,000	35,000	20	72	30
35,000	40,000	21	76	30
40,000	45,000	22	79	35
45,000	50,000	23	83	35
50,000	55,000	24	86	35

WAC 296-52-69115 (Cont.)

55,000	60,000	25	90	35
60,000	70,000	26	94	40
70,000	80,000	28	101	40
80,000	90,000	30	108	40
90,000	100,000	32	115	40
100,000	120,000	34	122	50
120,000	140,000	37	133	50
140,000	160,000	40	144	50
160,000	180,000	44	158	50
180,000	200,000	48	173	50
200,000	220,000	52	187	60
220,000	250,000	56	202	60
250,000	275,000	60	216	60
275,000	300,000	64	230	60

Note 1: These distances apply to the separation of storage. Table H-20 must be used in determining separation distances from inhabited buildings, passenger railways, and public highways.

Note 2: When the ammonium nitrate and/or blasting agent is not barricaded, the distances shown in the table must be multiplied by 6. These distances allow for the possibility of high velocity metal fragments from mixers, hoppers, truck bodies, sheet metal structures, metal containers, and the like which may enclose the "donor." When ammonium nitrate is stored in a bullet resistant magazine it is recommended explosives or where the storage is protected by a bullet resistant wall, distances, and barricade thickness in excess of those prescribed in Table H-20 are not required.

Note 3: The distances in the table apply to ammonium nitrate that passes the insensitivity test prescribed in the definition of ammonium nitrate fertilizer promulgated by the Fertilizer Institute, and ammonium nitrate failing to pass a test must be stored at separation distances determined by competent persons. (Definition and Test Procedures for Ammonium Nitrate Fertilizer, the Fertilizer Institute, formerly the National Plant Food Institute, November 1964.)

Note 4: These distances apply to nitro-carbo-nitrates and blasting agents, which pass the insensitivity test prescribed in the U.S. DOT regulations.

Note 5: Acceptable barricades include either natural or artificial barricades as defined in WAC 296-52-60130, Definitions.

Note 6: When the ammonium nitrate must be counted in determining the distances to be maintained from inhabited buildings, passenger railways, and public highways, it may be counted at one-half its actual weight because its blast effect is lower.

Note 7: Guide to use of table of recommended separation distances of ammonium nitrate and blasting agents from explosives or blasting agents.

(a) Sketch the location of all potential donors and acceptor materials together with the maximum amount of material to be allowed in the area. (Potential donors are high explosives, blasting agents, and combination of masses of detonating materials. Potential acceptors are high explosives, blasting agents, and ammonium nitrate.)

WAC 296-52-69115 (Cont.)

(b) *Consider each donor mass in combination with each acceptor mass. If the masses are closer than table allowance, distances measured between nearest edges, the combination of masses becomes a new potential donor of weight equal to the total mass. When individual masses are considered as donors, distances to potential acceptors must be measured between edges. When combined masses within propagating distance of each other are considered as a donor, the appropriate distance to the edge of potential acceptors must be computed as a weighted distance from the combined masses:*

(i) *Calculation of weighted distance from combined masses:*

Let M_2, M_3... Mn be donor masses to be combined.

M_1 is a potential acceptor mass.

D_{12} is distance from M_1 to M_2 (edge to edge).

D_{13} is distance from M_1 to M_3 (edge to edge), etc.

To find weighted distance $D_{1(2,3... n)}$ from combined masses to M_1, add the products of the individual masses and distances and divide the total by the sum of the masses:

$$\frac{D_{1(2,3n)} = M_2 \times D_{12} + M_3 \times D_{13} + M_n \times D_{in}}{M_2 + M_3 + M_n}$$

Propagation is possible if either an individual donor mass is less than the tabulated distance from an acceptor or a combined mass is less than the weighted distance from an acceptor.

(c) *When determining the distances separating highways, railroads, and inhabited buildings from potential explosions (as prescribed in Table H-20), the sum of all masses which may propagate (i.e., lie at distances less than prescribed in the table) from either individual or combined donor masses are included. However, the ammonium nitrate must be included, only 50 percent of its weight must be used because of its reduced blast effects. In applying Table H-21, distances from highways, railroads, and inhabited buildings, distances are measured from the nearest edge of potentially explodable material.*

(d) *When all or part of a potential acceptor comprises explosives Class A as defined in U.S. DOT regulations, storage in bullet resistant magazines is required. Safe distances to stores in bullet resistant magazines may be obtained from the intermagazine distances described in Table H-21.*

(e) *Barricades cannot have line of sight openings between potential donors and acceptors, which permit blast or missiles to move directly between masses.*

(f) *Good housekeeping practices must be maintained around any bin containing ammonium nitrate or blasting agent. This includes keeping weeds and other combustible materials cleared within twenty-five feet of the bin. Accumulation of spilled product on the ground must be prevented.*

WAC 296-52-69120 Table H-23--Quantity and distance tables for manufacturing buildings.

Explosives manufacturing plants that have buildings and magazines, where workers are regularly employed, must meet the quantity and separation distance requirements of Table H-23, intraexplosives plant quantity and distance table **.**

(1) **Explosives manufacturing buildings.** Explosives manufacturing buildings must be located away from manufacturing and nonmanufacturing buildings as required by Table H-23.

(2) **Magazines.** Magazines must be located away from manufacturing and nonmanufacturing buildings as required by Table H-23.

WAC 296-52-69120 (Cont.)

TABLE H-23		
Explosives		Distance Feet
Pounds Over	Pounds Not Over	
		Separate Building or Within Substantial Dividing Walls
. . . .	10	
10	25	40
25	50	60
50	100	80
100	200	100
200	300	120
300	400	130
400	500	140
500	750	160
750	1,000	180
1,000	1,500	210
1,500	2,000	230
2,000	3,000	260
3,000	4,000	280
4,000	5,000	300
5,000	6,000	320
6,000	7,000	340
7,000	8,000	360

WAC 296-52-69120 (Cont.)

8,000	9,000	380
9,000	10,000	400
10,000	12,500	420
12,500	15,000	450
15,000	17,500	470
17,500	20,000	490
20,000	25,000	530
25,000	30,000	560
30,000	35,000	590
35,000	40,000	620
40,000	45,000	640
45,000	50,000	660
50,000	55,000	680
55,000	60,000	700
60,000	65,000	720
65,000	70,000	740
70,000	75,000	770
75,000	80,000	780
80,000	85,000	790
85,000	90,000	800
90,000	95,000	820
95,000	100,000	830
100,000	125,000	900
125,000	150,000	950
150,000	175,000	1,000
175,000	200,000	1,050
200,000	225,000	1,100
225,000	250,000	1,150
250,000	275,000	1,200
275,000	300,000	1,250

WAC 296-52-69125 Table H-24--Low explosives.

(1) Use Table H-24 for: Magazines that are restricted to:

- Division 1.2 or 1.3
- Division 1.4, low explosives
- Low explosives classified by BATF

(2) Detonators cannot be stored with low explosives.

Table H-24
TABLE OF DISTANCES FOR STORAGE OF LOW EXPLOSIVES

Pounds		**From inhabited building distance (feet)**	**From public railroad and highway distance (feet)**	**From above ground magazine (feet)**
Over	Not Over			
0	1,000	75	75	50
1,000	5,000	115	115	75
5,000	10,000	150	150	100
10,000	20,000	190	190	125
20,000	30,000	215	215	145
30,000	40,000	235	235	155
40,000	50,000	250	250	165
50,000	60,000	260	260	175
60,000	70,000	270	270	185
70,000	80,000	280	280	190
80,000	90,000	295	295	195
90,000	100,000	300	300	200
100,000	200,000	375	375	250
200,000	300,000	450	450	300

WAC 296-52-69130 Table of distances for the storage of display fireworks (except bulk salutes).

Net weight of fireworks (pounds)	Distance between magazine and inhabited building, passenger railway, or public highway (feet)	Distance between magazine (feet)
0-1,000	150	1--
1,001-5,000	230	150
5,001-10,000	300	200
Above 10,000	Use Table H-20	--

Note 1: The net weight is the weight of all pyrotechnic compositions, and explosive materials and fuse only.
Note 2: For the purposes of applying this table, the term magazine also includes fireworks shipping buildings for display fireworks.
Note 3: For fireworks storage magazines in use prior to (2000) the distances in this table may be halved if properly barricaded between the magazine and potential receptor sites.
Note 4: This table does not apply to the storage of bulk salutes. Use Table H-20 for storage of bulk salutes.

PART F
MAGAZINE CONSTRUCTION

WAC **Page**

WAC 296-52-700 Magazine construction. 1
WAC 296-52-70005 Type 1 magazines: Permanent storage facilities. 1
WAC 296-52-70010 Building construction for Type 1 magazines. 1
WAC 296-52-70020 Type 2 magazines: Portable field storage. 3
WAC 296-52-70025 Construction for Type 2 magazines. 3
WAC 296-52-70030 Type 3 magazines: Indoor storage facilities. 6
WAC 296-52-70035 Storage facilities for detonators. 6
WAC 296-52-70040 Construction for Type 3 magazines. 6
WAC 296-52-70045 Type 4 magazines: Blasting agent, low explosive, or nonmass detonating detonator storage facilities. 6
WAC 296-52-70050 Construction for Type 4 magazines. 6
WAC 296-52-70055 Type 5 magazines: Blasting agent storage facilities. 7
WAC 296-52-70060 Construction for Type 5 magazines. 8
WAC 296-52-70065 Explosives day box. 8
WAC 296-52-70070 Detonator day box. 9
WAC 296-52-70080 Magazine heating system requirements. 9
WAC 296-52-70085 Lighting. 10

WAC 296-52-700 Magazine construction.

Construction of explosive storage magazines must comply with the requirements of this part and the Bureau of Alcohol, Tobacco, and Firearms (BATF) regulations.

Note: Construction requirements for blasting agent bulk storage bins are located in WAC 296-52-67140, Bulk storage bins.

WAC 296-52-70005 Type 1 magazines: Permanent storage facilities.

A Type 1 storage facility must be:

- A permanent structure such as:
  - A building
  - An igloo
  - An army-type structure
  - A tunnel
    or
  - A dugout
- Bullet resistant, fire resistant, weather resistant, theft resistant, and well ventilated.

WAC 296-52-70010 Building construction for Type 1 magazines.

All building-type storage facilities must:

- Be constructed of masonry, wood, metal, or a combination of these materials
- Have no openings except for entrances and ventilation
- Have the ground around the facility slope away for drainage

(1) **Wall construction.**

(a) **Masonry wall construction.** Masonry wall construction must:

- Consist of brick, concrete, tile, cement block, or cinder block
- Be at least 8 inches thick

(b) **Hollow masonry construction.** Hollow masonry construction must:

- Have all hollow spaces filled with well tamped coarse dry sand
  or
- Have weak concrete (a mixture of one part cement to eight parts sand with enough water to dampen the mixture) while tamping in place
  and
- Have interior walls covered with a nonsparking material

(c) **Fabricated metal wall construction.**

- Metal wall construction must be securely fastened to a metal framework and consist of one of the following types of metal:
  - Sectional sheets of steel (at least number 14 gauge)
    or
  - Aluminum (at least number 14 gauge)
- Metal wall construction must:
  - Be lined with brick, solid cement blocks, and hardwood at least 4 inches thick or material of equivalent strength
  - Have a minimum of 6-inch sand fill between interior and exterior walls
  - Have interior walls constructed of or covered with a nonsparking material

WAC 296-52-70010 (Cont.)

(d) **Wood frame wall construction.**

- Exterior wood walls must be covered with iron or aluminum at least number 26 gauge
- Inner walls, made of nonsparking materials must be constructed with a space:
  - A minimum of 6 inches between the outer and inner walls
    and
  - Filled with coarse dry sand or weak concrete

(2) **Floors.** Floors must be:

(a) Constructed of a nonsparking material.

(b) Strong enough to hold the weight of the maximum quantity to be stored.

(3) **Foundation.**

- Foundations must be constructed of brick, concrete, cement block, stone, or wood posts
- If piers or posts are used instead of a continuous foundation, the space under the building must be enclosed with metal

(4) **Roof.**

(a) Roofs must be covered with no less than number 26 gauge iron or aluminum fastened to a 7/8-inch sheathing, except for buildings with fabricated metal roofs.

(b) If it is possible for a bullet to be fired directly through the roof at such an angle that it would strike a point below the top of the inner walls, storage facilities must be protected by one of the following two methods:

- A sand tray must be:
  - Located at the top of the inner wall covering the entire ceiling area, except the area necessary for ventilation.
  - Lined with a layer of building paper.
  - Filled with at least 4 inches of coarse dry sand.
- A fabricated metal roof must be constructed of 3/16-inch plate steel lined with 4 inches of hardwood or material of equivalent strength. For each additional 1/16-inch of plate steel, the hardwood or material of equivalent strength lining may be decreased one inch.

(5) **Doors and hinges.**

(a) All doors must be constructed of 1/4-inch plate steel and lined with 3 inches of hardwood or material of equivalent strength.

(b) Hinges and hasps must be installed so they cannot be removed when the doors are closed and locked by:

- Welding
- Rivering
  or
- Bolting nuts on the inside of the door

(6) **Locks.**

(a) Each door must be equipped with:

- 2 mortise locks
- 2 padlocks fastened in separate hasps and staples
- A combination of a mortise lock and a padlock

WAC 296-52-70010 (Cont.)

- A mortise lock that requires two keys to open
  or
- A 3 point lock

(b) Padlocks must:

- Have a minimum of 5 tumblers
- Have a case hardened shackle at least 3/8 inches in diameter
- Be protected with a minimum of ¼-inch steel hoods, constructed to prevent sawing or lever action on the locks, hasps, and staples

Note: These requirements do not apply to magazine doors that are adequately secured on the inside by means of a bolt, lock, or bar that cannot be operated from the outside.

(7) **Ventilation.**

- A 2-inch air space must be left around ceilings and the perimeter of floors, except in doorways
- Foundation ventilators must be at least four inches by 6 inches
- Vents in the foundation, roof, or gables must be screened and offset

(8) **Exposed metal.**

- Sparking metal construction cannot be exposed below the tops of walls in storage facilities
- All nails must be blind nailed, countersunk, or nonsparking

WAC 296-52-70015 Igloos, army-type structures, tunnels, and dugouts.

These storage facilities must:

- Be constructed of reinforced concrete, masonry, metal, or a combination of these materials
- Have an earth mound covering of at least 24 inches on the top, sides, and rear unless the magazine meets the requirements of WAC 296-52-70010 (4)(b), Building construction for roofs
- Have interior walls and floors covered with a nonsparking material
- Be constructed according to the requirements of WAC 296-52-70005, Type 1magazines: Permanent storage facilities, through WAC 296-52-70060, Construction.

WAC 296-52-70020 Type 2 magazines: Portable field storage.

A Type 2 storage facility must:

- Be a box, trailer, semi-trailer, or other mobile facility. When an unattended vehicular magazine is used, the wheels must be removed or it must be effectively immobilized by kingpin locking devices or other methods approved by the department
- Be bullet resistant, fire resistant, weather resistant, theft resistant, and well ventilated
- Be a minimum of one cubic yard
- Be supported to prevent direct contact with the ground
- Have the ground around the magazine slope away for drainage or provide for other adequate drainage.

WAC 296-52-70025 Construction for Type 2 magazines.

(1) **Exterior, doors, and top openings.**

(a) The exterior and doors must be constructed of at least 1/4-inch steel and lined with a minimum of 3-inch hardwood.

(b) Magazines with top openings must have lids with water resistant seals or lids that overlap the sides by a minimum of one inch when closed.

WAC 296-52-70025 (Cont.)

(2) **Hinges and hasps.** Hinges and hasps must be installed so they cannot be removed when the doors are closed and locked by:

- Welding
- Riveting
  or
- Bolting nuts on the inside of the door

(3) **Locks.**

(a) Each door must be equipped with:

- 2 mortise locks
- 2 padlocks fastened in separate hasps and staples
- A combination of mortise lock and a padlock
- A mortise lock that requires two keys to open
  or
- A 3-point lock

(b) Padlocks must have:

- A minimum of 5 tumblers and a case hardened shackle with a minimum of 3/8-inch diameter
- A minimum of ¼-inch steel hoods constructed to prevent sawing or lever action on the locks, hasps, and staples

Note: These requirements do not apply to magazine doors that are adequately secured on the inside by means of a bolt, lock, or bar that cannot be operated from the outside.

(4) **Ventilation.**

- A 2-inch air space must be left around ceilings and the perimeter of floors, except at doorways
- Foundation ventilators must be at least 4 inches by 6 inches
- Vents in the foundation, roof, or gables must be secured and offset

(5) **Exposed metal.**

- Sparking metal cannot be exposed below the top of walls in the storage facilities
- All nails must be blind nailed, countersunk, or nonsparking

Note: The following are nonmandatory construction alternatives for magazine exteriors:

- *All steel and wood dimensions shown are actual thickness*
- *The manufacturer's represented thickness may be used to meet the concrete block and brick dimensions.*

3/16

- 3/16-inch steel lined with an interior of 4-inch hardwood
- 3/16-inch steel lined with:
  - An interior of 7 inches of softwood
    or
  - 6 3/4 inches of plywood.
- 3/16-inch steel lined with:
  - An intermediate layer of 3-inch hardwood
    and
  - An interior lining of 3/4-inch plywood.

WAC 296-52-70025 (Cont.)

1/8

- 1/8-inch steel lined with an interior of 5-inch hardwood.
- 1/8-inch steel lined with an interior of 9-inch softwood.
- 1/8-inch steel lined with:
  - An intermediate layer of 4-inch hardwood
    and
  - An interior lining of 3/4-inch plywood .
- 1/8-inch steel lined with:
  - A first intermediate layer of 3/4-inch plywood.
  - A second intermediate layer of 3 5/8 inches well-tamped dry sand
    or
  - Sand/cement mixture.

An interior lining of 3/4-inch plywood.

- 5/8-inch steel lined with an interior of any type of nonsparking material.
- 1/2-inch steel lined with an interior of at least 3/8-inch plywood.
- 3/8-inch steel lined with an interior of 2-inch hardwood.
- 3/8-inch steel lined with an interior of:
  - 3 inches softwood
    or
  - 2 1/4 inches of plywood.
- 1/4-inch steel lined with:
  - An interior of 5 inches of softwood
    or
  - 5 1/4 inches of plywood.
- Any type of structurally sound fire resistant material lined with:
  - An intermediate layer of 4-inch solid concrete block
    or
  - 4-inch solid brick or concrete
    and
  - An interior lining of 1/2-inch plywood placed securely against the masonry lining.
- Standard 8-inch concrete block with voids filled with well tamped sand/cement mixture.
- Standard 8-inch solid brick.
- Any type of structurally sound fire resistant material lined with an intermediate 6-inch space filled with:
  - Well tamped dry sand
    or
  - Well tamped sand/cement mixture.
- Any type of fire resistant material lined with:
  - A first intermediate layer of 3/4-inch plywood,
  - A second intermediate layer of 3 5/8-inch well tamped dry sand
    or
  - Sand/cement mixture,
  - A third intermediate layer of 3/4-inch plywood,

WAC 296-52-70025 (Cont.)

- A fourth intermediate layer of 2-inch hardwood
  or
- 14 gauge steel and an interior lining of 3/4-inch plywood,
- 8-inch thick solid concrete.

WAC 296-52-70030 Type 3 magazines: Indoor storage facilities.

- Detonators in quantities of 1000 or less
- Ammonium perchlorate rocket motors in 62.5 gram amounts or greater, but not to exceed 50 pounds in total weight of explosives.
  or
- Diversionary devices intended for law enforcement use only, but not to exceed 50 pounds in total weight of explosives.

WAC 296-52-70035 Storage facilities for detonators.

Storage facilities for detonators in quantities of 1000 or less:

- Must be fire resistant and theft resistant
- Must be locked in an uninhabited building
- May be less than one cubic yard
- Must be painted red and have an identification label in case of fire.

WAC 296-52-70040 Construction for Type 3 magazines.

(1) Sides, bottoms, and covers must be constructed with a minimum of number 12 gauge metal and lined with a nonsparking material.

(2) Hinges and hasps must be attached so they cannot be removed from the outside.

(3) One steel padlock, which does not need to be protected by a steel hood, having a minimum of 5 tumblers and a case hardened shackle of a minimum of 3/8-inch diameter is sufficient for locking purposes.

WAC 296-52-70045 Type 4 magazines: Blasting agent, low explosive, or nonmass detonating detonator storage facilities.

A Type 4 storage facility must:

- Be a building, an igloo, an army-type structure, a tunnel, a dugout, a box, a trailer, semi-trailer, or other mobile facility
- Be fire resistant, weather resistant, and theft resistant
- Have the ground around the facility slope away for drainage
- Have the wheels removed or effectively immobilized by kingpin locking devices or other methods approved by the department, when an unattended vehicular magazine is used.

Note: Test results show that electric detonators are not affected by sympathetic detonation. Therefore, a Type 4 storage facility meets the necessary requirements for storage of electric detonators.

WAC 296-52-70050 Construction for Type 4 magazines.

(1) These magazines must be constructed of masonry, metal covered wood, fabricated metal, or a combination of these materials.

WAC 296-52-70050 (Cont.)

(2) **Foundations.** Foundations must be constructed of:

- Brick
- Concrete
- Cement block
- Stone
- Metal
  or
- Wood posts

(3) The space under the building must be enclosed with fire resistant material, if piers or posts replace continuous foundation.

(4) The walls and floors must be made or covered with a nonsparking material or lattice work.

(5) Doors must be metal or solid wood covered with metal.

(6) Hinges and hasps must be installed so they cannot be removed when the doors are closed and locked by:

- Welding
- Riveting
  or
- Bolting nuts on the inside of the door

(7) **Locks.**

(a) Each door must be equipped with:

- 2 mortise locks
- 2 padlocks fastened in separate hasps and staples
- A combination of a mortise lock and a padlock
- A mortise lock that requires two keys to open
  or
- A 3-point lock

(b) Padlocks must:

- Have a minimum of 5 tumblers
- Have a case hardened shackle of a minimum of 3/8-inch diameter
- Be protected with a minimum of ¼-inch steel hoods constructed to prevent sawing or lever action on the locks, hasps, and staples.

Note: These requirements do not apply to magazine doors that are adequately secured on the inside by means of a bolt, lock, or bar that cannot be operated from the outside.

WAC 296-52-70055 Type 5 magazines: Blasting agent storage facilities.

A Type 5 storage facility must:

- Be a building, an igloo, an army-type structure, a tunnel, a dugout, a box, or a trailer, semi-trailer, or other mobile facility
- Be weather resistant and theft resistant
- Have the ground around the facility slope away for drainage
- Have the wheels removed or be effectively immobilized by kingpin locking devices or other methods approved by the department, when the unattended vehicular magazine is used.

WAC 296-52-70060 Construction for Type 5 magazines.

(1) Doors must be constructed of solid wood or metal.

(2) Hinges and hasps must be installed so they cannot be removed when the doors are closed and locked by:

- Welding
- Riveting
  or
- Bolting nuts on the inside of the door

(3) **Locks.**

(a) Each door must be equipped with:

- 2 mortise locks
- 2 padlocks fastened in separate hasps and staples
- A combination of a mortise lock and a padlock
- A mortise lock that requires two keys to open
  or
- A 3-point lock

(b) Padlocks must have:

- A minimum of 5 tumblers
- A case hardened shackle of a minimum of 3/8-inch diameter
- Padlocks must be protected with a minimum of ¼-inch steel hoods constructed to prevent sawing or lever action on the locks, hasps, and staples.

Note: Trailers, semi-trailers, and similar vehicular magazines. Each door may be locked with one 3/8-inch diameter steel padlock and does not need to be protected by a steel hood, if the door hinges and lock hasp are securely fastened to the magazine and to the doorframe. These requirements do not apply to magazine doors that are adequately secured on the inside by means of a bolt, lock, or bar that cannot be operated from the outside.

WAC 296-52-70065 Explosives day box.

(1) A day box for explosives must:

- Be fire, weather, and theft resistant
- Be used in a manner that safely separates detonators from other explosives
- Be constructed of a minimum of number 12 gauge (.1046 inches) steel
- Be lined with at least either 1/2-inch plywood or 1/2-inch masonite-type hardboard
- Have doors that overlap the sides by a minimum of one inch
- Have appropriate ground slope for drainage

(2) Hinges and hasps must be attached by:

- Welding
- Riveting
  or
- Bolting nuts on the inside of the door

(3) One steel padlock, which does not need to be protected by a steel hood, having a minimum of 5 tumblers and a case hardened shackle of a minimum of 3/8-inch diameter is sufficient for locking purposes.

WAC 296-52-70070 Detonator day box.

A detonator day box is a temporary storage facility for detonators in quantities of 1000 or less.

(1) **Construction materials.** Sides, bottoms, and covers must be:

- Constructed of number 12 gauge metal
- Lined with nonsparking material

(2) Hinges and hasps must be attached by:

- Welding
- Riveting
  or
- Bolting nuts on the inside of the door

(3) A single 5 tumbler lock must be used to lock the detonator day box.

HEATING SYSTEMS

WAC 296-52-70080 Magazine heating system requirements.

Magazine heating system requirements and the following apply:

(1) **Heat sources.** Magazines requiring heat must be heated by either:

- Hot water radiant heating
  or
- Air directed into the magazine building by hot water or low pressure steam (15 psig) coils located outside the magazine building

(2) **Heating systems.** Magazine heating systems must meet the following requirements:

(a) The radiant heating coils in the building must be installed where explosive materials or their containers cannot touch the coils and air is free to circulate between the coils and the explosive material containers.

(b) The heating ducts must be installed where the hot air released from a duct is not directed toward the explosive material or containers.

(c) The heating device used in connection with a magazine must have controls, to prevent the building temperature from exceeding 130ºF.

(d) The electric fan or pump used in the heating system for a magazine must be:

- Mounted outside
- Separate from the wall of the magazine
- Grounded

(e) **Electric motor, device controls, and electric switch gear.**

(i) The electric fan motor and the controls for electrical heating devices used in heating water or steam must have overloads and disconnects which comply with the National Electrical Code, (NFPA Number 70-1992).

(ii) All electrical switch gear must be located a minimum distance of 25 feet from the magazine.

WAC 296-52-70080 (Cont.)

(f) **Water or steam heating source.**

(i) A heating source for water or steam must be separated from a magazine by a distance of at least:

- 25 feet when the heating source is electrical
- 50 feet when the heating source is fuel fired

(ii) The area between a heating unit and a magazine cannot contain combustible materials.

(g) The storage of explosive material containers in the magazine must allow for uniform air circulation, so temperature uniformity can be maintained throughout the explosive materials.

WAC 296-52-70085 Lighting.

(1) Battery activated safety lights or lanterns may be used in explosive storage magazines.

(2) **National Fire Protection Association (NFPA) Standards.**

(a) Electric lighting used in an explosive storage magazine must meet National Electric Code (NEC) standards (NFPA 70-1992) for all magazine conditions.

(b) All electrical switches must:

- Be located outside the magazine
- Meet NEC standards.

PART G
MISCELLANEOUS

WAC **Page**

WAC 296-52-710 Exemptions. 1
WAC 296-52-71015 Quantity limits. 1
WAC 296-52-71020 Storage with Division 1.1, 1.2, or 1.3 explosives. 1
WAC 296-52-71025 Separation from flammable materials. 1
SMALL ARMS SMOKELESS POWDER 1
WAC 296-52-71035 Transportation. 1
WAC 296-52-71040 Shipping container. 1
WAC 296-52-71045 Storage. 1
WAC 296-52-71055 Shipping containers. 2
WAC 296-52-71060 Separation from flammable materials. 2
WAC 296-52-71065 Storage. 2
WAC 296-52-71075 Shipping containers. 2
WAC 296-52-71080 Storage. 3
WAC 296-52-71090 Delivery to carriers. 3
WAC 296-52-71095 Hours of transfer. 3
WAC 296-52-71100 Storage in route. 3
WAC 296-52-71105 Railway cars. 3
WAC 296-52-720 Appendix A, sample explosives-blasting ordinance for local jurisdictions, nonmandatory. 4
WAC 296-52-725 Appendix B, sample format for a blast record, nonmandatory. 9

WAC 296-52-710 Exemptions.

These rules do not apply to in process storage and intraplant transportation during the manufacture of small arms ammunition, small arms primers, and smokeless powder.

AMMUNITION

WAC 296-52-71015 Quantity limits.

Quantity limitations are not imposed on the storage of small arms ammunition in warehouses, retail stores, and other general occupancy facilities, except those imposed by the limitations of the storage facility.

WAC 296-52-71020 Storage with Division 1.1, 1.2, or 1.3 explosives.

Small arms ammunition cannot be stored with Division 1.1, 1.2, or 1.3 explosives.

WAC 296-52-71025 Separation from flammable materials.

Small arms ammunition must be separated from flammable liquids, flammable solids (as classified in 49 CFR Part 172), and oxidizing materials by a:

- Fire resistant wall with a one-hour rating
  or
- Distance of 25 feet

SMALL ARMS SMOKELESS POWDER

WAC 296-52-71035 Transportation.

Quantities of small arms ammunition weighing more than 50 pounds must be transported according to federal Department of Transportation (U.S. DOT) regulations.

WAC 296-52-71040 Shipping container.

- Small arms smokeless powder (Division 1.2 or 1.3) must be packed, stored, and transported in U.S. DOT approved shipping containers.
- All smokeless powder must be stored in shipping containers made for smokeless powder (as required by 49 CFR 173.93).

WAC 296-52-71045 Storage.

(1) **Private residence or car.**

- 25 pounds or less of small arms smokeless powder, no restrictions
- 25 to 50 pounds of small arms smokeless powder, they must be stored in a strong box or cabinet constructed of a minimum of ¾-inch plywood or equivalent material, on all sides, top, and bottom

(2) **Commercial stocks.**

- Over 20 pounds but not more than 100 pounds of small arms smokeless powder must be stored in portable wooden boxes with a minimum of one-inch thick walls
- Small arms smokeless powder not exceeding 150 pounds, must be stored in a nonportable storage cabinet with a minimum of one-inch thick wood walls

(3) **Dealer's warehouse.**

- A dealer's warehouse cannot hold more than 150 pounds of small arms smokeless powder
- 20 to 100 pounds of small arms smokeless powder must be stored in a minimum of one-inch thick portable or fixed wooden boxes

WAC 296-52-71045 (Cont.)

(4) **Dealer's display.**

- The dealer's display cannot exceed more than 75 pounds of small arms smokeless powder
- Small arms smokeless powder must be stored in one-pound containers

(5) **Magazines.** Small arms smokeless powder that exceed 150 pounds must be stored in approved licensed magazines. See Storage licensing, WAC 296-52-660, Storage of explosive materials, WAC 296-52-690, and Magazine construction, WAC 296-52-700.

SMALL ARMS AMMUNITION PRIMERS

WAC 296-52-71055 Shipping containers.

Small arms ammunition primers must be packed, stored, and transported in U.S. DOT approved shipping containers.

WAC 296-52-71060 Separation from flammable materials.

Primers must be separate from flammable liquids, flammable solids, and oxidizing materials by a:

- Fire resistant wall with a one hour rating
  or
- Distance of 25 feet.

WAC 296-52-71065 Storage.

(1) **Private residence.** The maximum small arms ammunition primers permitted is 10,000 primers. No restrictions apply.

(2) **Private car.** The maximum small arms ammunition primers permitted is 25,000 primers. No restrictions apply.

(3) **Dealer's display.** The maximum small arms ammunition primers permitted is 10,000 primers. No restrictions apply.

(4) **Dealer's warehouse.**

- The maximum small arms ammunition primers permitted is 750,000 primers
  - No more than 100,000 small arms ammunition primers may be -stored in one stack
  - Stacks must be separated by at least 15 feet

(5) **Magazines.** If there are more than 750,000 small arms ammunition primers, they must be stored in approved licensed magazines (see Storage licensing, WAC 296-52-660, Storage of explosive material, WAC 296-52-690, and Magazine construction, WAC 296-52-700).

BLACK POWDER

WAC 296-52-71075 Shipping containers.

Black powder, used in muzzleloading firearms must be packed, stored, and transported in U.S. DOT approved shipping containers.

WAC 296-52-71080 Storage.

(1) **Private residence.** No more than 5 pounds of black powder is permitted. No restrictions apply.

(2) **Private car.** No more than 5 pounds of black powder is permitted. No restrictions apply.

(3) **Dealer's warehouse.** No more than 25 pounds of black powder is permitted. Black powder must be stored in an appropriate container or cabinet, which is securely locked.

(4) **Magazine.** Quantities of black powder, as used in muzzleloading firearms, in excess of 25 pounds must be stored in licensed magazines (see Storage licensing, WAC 296-52-660, Storage of explosive materials, WAC 296-52-690, and Magazine construction, WAC 296-52-700).

EXPLOSIVES AT PIERS, RAILWAY STATIONS, RAILWAY CARS, AND VESSELS NOT OTHERWISE SPECIFIED IN THIS CHAPTER

WAC 296-52-71090 Delivery to carriers.

Explosives delivered to any carrier must comply with U.S. DOT regulations. Explosives cannot be delivered to any carrier unless the packaging is are in compliance with U.S. DOT regulations.

WAC 296-52-71095 Hours of transfer.

Explosives cannot be received between sunset and sunrise from any:

- Railway station
- Truck terminal
- Pier
- Wharf
- Harbor facility
  or
- Airport terminal.

WAC 296-52-71100 Storage in route.

Explosives waiting for delivery or further transit at a railway facility, truck terminal, pier, wharf, harbor facility, or airport terminal must be:

- Stored in a safe place
- Isolated as much as practical
- In a manner that allows quick and easy removal.

WAC 296-52-71105 Railway cars.

(1) **Use of railway cars.**

Explosives cannot be kept in a railway car unless:

- An emergency exists
- Permission has been granted by the local authority
- The railway car, its contents, and methods of loading are in compliance with U.S. DOT regulations (49 CFR Chapter 1)

WAC 296-52-71105 (Cont.)

(2) **Warning signs for railway cars not in transit.**

- Any railway car containing explosives must have warning signs attached to every side of the car when it is:
  - Stopped in transit
    or
  - At its designation
    and
  - No longer considered in interstate commerce
- Warning signs must read **"EXPLOSIVES--HANDLE CAREFULLY--KEEP FIRE AWAY."**

  The letters must be:
  - Red
  - At least one and one-half inches high
  - On a white background.

WAC 296-52-720 Appendix A, sample explosives-blasting ordinance for local jurisdictions, nonmandatory.

Explosives-blasting ordinance for local jurisdictions

Be it ordained by the _____ (jurisdiction name).

Section 1: Permit required.

(1) A current and valid blasting permit issued by _____ (jurisdiction name) is required by companies or individuals who:

- Possess explosive materials (as defined by chapter 296-52 WAC, Safety standards for possessions and handling of explosives)
- Conduct an operation or activity requiring the use of explosive materials
  or
- Perform, order, or supervise the loading and firing of high explosive materials

(2) Anyone in _____ (jurisdiction name) who does not have a valid blasting permit cannot transport, sell, give, deliver, or transfer explosive materials.

(3) A blasting permit is required for every individual project requiring blasting explosives.

(4) A permit issued to any person, company, or corporation under this ordinance is nontransferable to any other person, company, or corporation.

(5) All blasting permits issued by _____ (jurisdiction name) must follow all federal, state, county, and city laws and regulations that apply to these activities with explosive materials:

- Obtaining
- Owning
- Transporting
- Storing
- Handling
- Using.

WAC 296-52-720 (Cont.)

Section 2: Application contents.

(1) The proper administrative authority (___name___) or their designee, has the power and authority to issue blasting permits and requires persons, companies, or corporations who are issued permits to file an application that includes:

(a) A completed application form provided by _____ (jurisdiction name) specifying the name and address of the person, company or corporation applying for the permit, and the name and address of the blast site or the person who will actually supervise the blasting.

(b) A current and valid explosives license issued by the state of Washington department of labor and industries to one or more individuals working on the specific blasting project.

(c) A transportation plan according to Section 8.

(d) A blasting plan according to Section 10(1).

(e) A traffic control plan according to Section 10(2).

(f) A preblast; notification, inspection, and monitoring plan according to Section 10(3).

(g) Proof of insurance must be provided according to Section 4.

(2) _____ (jurisdiction name) will issue a permit within 14 days of receiving an application that includes acceptable documentation of the above items 1 a through g through 7. If the permit is denied, it must be done within 14 days of administering authority receipt and must include a list of reasons for denial as well as instructions for reapplication.

Section 3: Fee.

A permit fee is required for each permit issued. It should be:

- Valid for 12 months
- Follow the local fee schedule
- Renewable

Section 4: Liability insurance required.

(1) If the _____ (jurisdiction name) design requires approval, then coverage of one million dollars or more is required or other reasonable amount depending on the circumstances as determined by _____ (name of the proper administrative authority).

(2) The certificate must also state that the insurance company must give _____ (jurisdiction name) a minimum of 10 days notice of cancellation of the liability insurance coverage.

(3) The _____ (name of the proper administrative authority) has the power and authority to limit the level of blasting. After examining all pertinent circumstances surrounding the proposed blasting, they may refuse to issue a permit, or suspend, or revoke an existing permit.

Section 5: Revocation.

The _____ (name of the proper administrative authority) has the power to revoke any permit if the permit holder does not follow the requirements of this chapter. The permit holder has 24 hours to remove all explosive materials after being notified that their permit has been revoked.

Section 6: Denial or revocation appeal.

Any person, company, or corporation whose blasting permit application is denied, suspended, or revoked by _____ (name of proper authority), may file a notice of appeal within 10 days to _____ (name of the legislative body with jurisdiction over the administrator).

- The legislative body must schedule an appeals hearing within fourteen days.

WAC 296-52-720 (Cont.)

Section 7: _____ (jurisdiction name) not to assume liability.

_____ (jurisdiction name) is not responsible for any damage caused by the person, company, or corporation blasting with _____ (jurisdiction name).

Section 8: Transportation of explosives (transportation plan).

(1) You must include a transportation plan that addresses the transportation of explosive materials within _____ (jurisdiction name) with your application for a blasting permit.

(2) The transportation plan must include the following information:

(a) Route used for deliveries and returns

(b) Hours of transportation

(c) Maximum quantities of explosives being transported

(d) Types of vehicles being used. Vehicles must be in compliance with federal and state transportation regulations for transportation of explosive material.

Section 9: Storage of explosives.

(1) No overnight storage of explosive material is permitted within the limits of _____ (jurisdiction area) without specific amendments to the permit allowing storage. Blast holes loaded with explosives are to be shot on the day they are loaded.

(2) The required method of handling explosives in _____ (jurisdiction area) is as follows:

(a) Same day delivery

(b) Stand by during loading

(c) Return of all unused explosive materials.

Section 10: Use of explosives.

(1) **Blasting plan.** A blasting plan for each project must be submitted to _____ and approved by the _____ (name of the proper administrative authority) or their designee prior to issuing a blasting permit. The plan must include additional documentation for the proposed blasting operation. For example, maps, site plans, and excavation drawings. The plan must include:

(a) The location where the blast will occur

(b) The approximate total amount of material to be blasted

(c) The incremental volumes, per blast, of material to be blasted

(d) The types and packaging of explosive materials to be used

(e) The drill hole diameters, depths, patterns, subdrilling depths and drill hole orientation to be used

(f) The initiation system, the incremental delay times, and the location of the primers in the explosive column

(g) The stemming depths and stemming material for the various estimated depths of drill holes to be blasted

(h) The approximate powder factors anticipated

(i) The flyrock control procedures and equipment to be used

(j) The maximum number of blasts that will be made in one day

WAC 296-52-720 (Cont.)

(k) The blast warning sound system and equipment to be used

(l) The scheduled start date and finish date of blasting operations

(m) Additional requirements as needed.

(2) **Traffic control plan.** A traffic control plan acceptable to _____ (jurisdiction name) detailing signing, flagging, temporary road closures, and detour routes for blasting operations must be filed before the blasting permit is issued.

(3) **Preblast notification plan.** A plan outlining preblast public notifications, structural inspections, and blast effect monitoring within a specified distance of the blasting is required before the blasting permit is issued.

(a) **Separation distance.** The distances from the blasting where the notification, preblast structural inspection, and blast monitoring is required must be determined by the scaled distance formulas described below. Blasting will not be permitted until the notification and inspection requirements are completed.

(b) **Scaled distance formulas.**

(i) The distance from the blast within which:

- Notification of all occupied structures is required: Da .= 90 w
- Inspection of all occupied structures is required: Db .= 75 w
- Monitoring of selected structures is required: Dc = 60 w

(ii) In the above formulas:

- Da, Db, and Dc are the actual distances in feet from the closest point in the blast.
- W is the square root of the maximum weight of the explosives in pounds detonated with a minimum 8 millisecond from another detonation event.

(c) **Notification letter.** The preblast notification must consist of a letter advising all residents within the distance (specified in WAC 296-52-720 section 10 (3)(b)) of the blasts. The letter must include the intent of the blasting program, its anticipated impact on local residents, the proposed duration of blasting activities, and provide telephone numbers for public contact. Distribution of this notification must be made a minimum of seven days before the start of blasting. The source of the chart is 121.8507, Bureau of Mines, U.S. Department of Interior, 1980.

(d) **Preblast inspection.** A preblast inspection of resident's property must be offered to all residents within the distance (specified in WAC 296-52-720 section 10 (3)(b) above) of the blasting at no cost to the resident and will be performed by a qualified third party who is not an employee of the contractor. A copy of the individual inspection reports and a log of all photos taken are to be provided to _____ (jurisdiction name). Where inspections are not allowed by the resident or are not possible for other reasons, a certified letter must be sent to the occupant/owner at the unsurveyed address advising them of their right to a preblast inspection and the possible consequences of denying an inspection. The preblast inspection program for residences within the specified distance must be complete two days prior to the start of blasting and the _____ (name of the proper administrative authority) should be notified.

(4) **Blast-plan compliance inspections.** Blast-plan compliance inspections may be required for every blast until the operator can demonstrate an ability to safely blast according to the blast plan and control the extraneous effects of blasting such as flyrock, noise/air blast, and ground vibration. If more than 2 blasting inspections are required, an additional fee of _____ (insert dollar amount) per blast inspection will be assessed.

WAC 296-52-720 (Cont.)

(5) **Monitoring.** All blasts which require monitoring by section 10 (3)(b) are to be monitored using blast monitoring equipment designed for the purpose and carrying a certificate of calibration dated within the previous 12 months. The blast monitors must record peak particle velocity and frequency in 3 orthogonal directions and air over pressure. Monitored shots in which the pounds detonated per an 8-millisecond time increment is less than 10 pounds, one blast monitor is required. When 10 or more pounds is detonated per an 8-millisecond time interval, two or more blast monitors are required. All blast-monitoring records are to be signed and submitted to _____ (jurisdiction name) within 24 hours of each blast.

(6) **Maximum peak particle velocity.** The maximum peak particle velocity in any seismic trace at the dominant frequency allowed on any residential, business or public structure designed for human occupancy is to be determined by the chart in WAC 296-52-67065(1).

(7) **Air blast.** The maximum air blast over pressure permitted at the closest residential, business or public structure designed for human occupancy is not to exceed 133 dBL @ 2.0 Hz hi pass system per WAC 296-52-67065(3). The source of this regulation is 121.8485, Bureau of Mines, U.S. Department of Interior, 1980.

(8) **Utilities.** Whenever blasting is being conducted in close proximity to existing utilities, the utility owner must be notified a minimum of 24 hours in advance of blasting.

(9) **Blast report.** A signed blast report, on a form approved by the _____ (name of the proper administrative authority) or their designee, needs to be filed with _____ (jurisdiction name) within 24 hours of the blast. The report must include the following blast information:

(a) Date, time, and location of the blast

(b) Number of drill holes

(c) Maximum, minimum and average drill hole depth

(d) Drill hole diameter

(e) Subdrill depth

(f) Total pounds of each type of explosive used

(g) A drill hole section schematic showing the loading of a typical hole

(h) Amount and type of stemming material

(i) Schematic showing the drill hole pattern

(j) Initiated delayed sequence

(k) Maximum pounds of explosives detonated in any 8 millisecond time interval

(l) Type and size of any flyrock protection devices used, if any

(m) Comment regarding the outcomes of the blast.

(10) _____ (jurisdiction name) must be notified immediately of any unplanned or unusual events that resulted from the blast. The permittee must also report any incident, damage claim, or neighbor annoyance report brought to the permittee's attention within 24 hours.

Section 11:

This ordinance will be in effect to preserve the health, peace, and safety of the citizens of _____ (jurisdiction name).

WAC 296-52-725 Appendix B, sample format for a blast record, nonmandatory.

Note: The sample blast record format is nonmandatory, but the information shown in the sample is required per WAC 296-52-67010(8), Blast records.

SAMPLE FORMAT FOR A BLAST RECORD

(Minimum Record Requirements)

Blast/Record Date_____ Blast #_____Time of Blast_____☐ AM ☐ PM

Employer:_____

Blast-Site Location:_____

Blast Crew Members:

_____

_____

_____

General Weather Conditions (Clouds & Ceiling, Humidity, Wind Speed/Direction, Temperature, etc.):

_____

_____

_____

Type & Condition of Rock Blasted:

_____

Number of Boreholes	Diameter _____ in.	Depth _____ ft.	Backfill_____
Borehole Water Depth	Burden _____ ft.	Spacing _____	
Number of Rows	Stemming _____ ft.	Stemming Material _____	
Non-Standard Pattern Details:			

MAKE, TYPE and AMOUNT Of Explosives Used

_____ _____lb.

_____ _____lb.

_____ _____lb.

_____ _____lb.

_____ _____lb.

_____ _____lb.

DETONATORS

☐ Electric ☐ None

Manufacturer _____

Length _____

Delay Periods _____

# of Units _____

Total Pounds in Blast = _____lb. ☐ Cord

_____

Maximum boreholes per delay _____ Maximum loaded pounds per delay _____

Number of decks per borehole _____ Weight of explosives per deck _____

Distance, direction, and address of closest structure from blast site _____ ft.

Distance: _____ ft. Direction: _____ Address: _____

Calculated scaled distance W = $(D/(55/60/65))^2$ = _____ Maximum lb. Per delay allowed in (USBM)

Distance, direction, and address of seismographs from the blasts site.

Distance: _____ ft. Direction: _____ Address: _____

Calibration dates of seismographs used:

Number _____ Date _____ Number _____ Date _____

Method used to measure distances (Laser RF, Optical RF, GPS, Tape, Wheel, Map)?

_____ Other Method: _____

WAC 296-52-725 (Cont.)

BLASTING RECORD

SKETCH OF BLAST LAYOUT

IDENTIFY SHOT LOCATION BY STATION OR BY DIRECTION AND DISTANCE TO KNOWN STRUCTURE OR OBJECT. SHOW NORTH ARROW. SHOW DELAY NUMBER BY HOLE AND WIRING/CORD/TUBING HOOKUP.

TYPICAL HOLES

BLAST LOCATION &
BLAST NUMBER_____ **DATE:**___/___/___

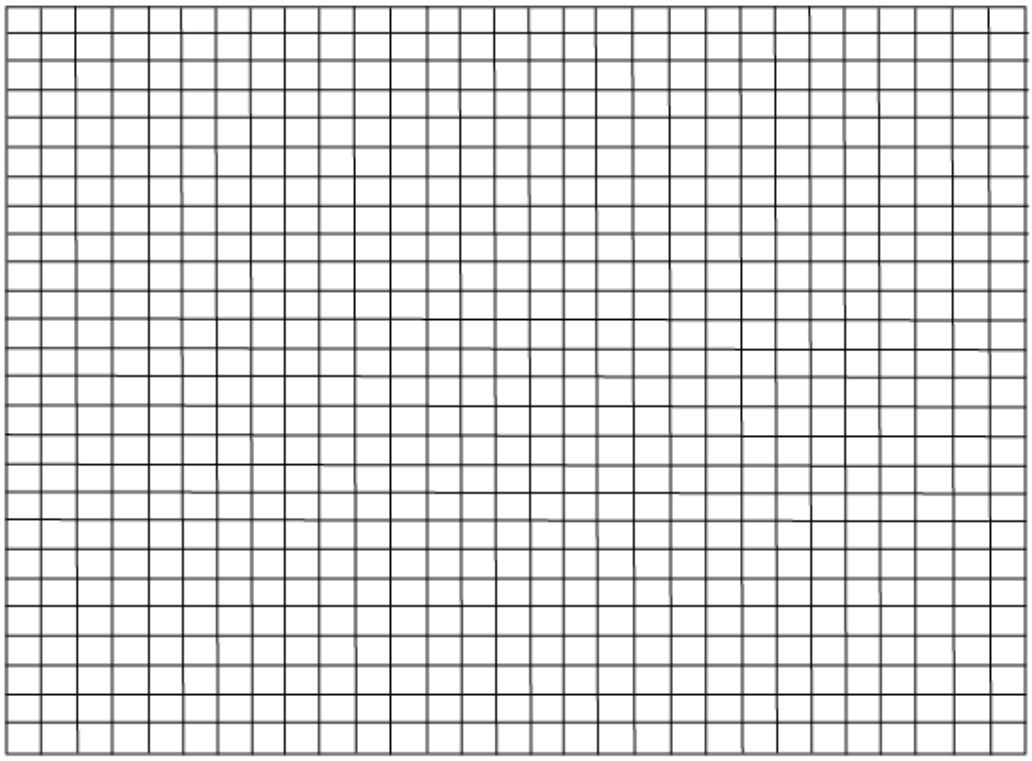

SHOW: Depth, Stemming, Decks, Water, Primer Locations, Subdrilling, etc.

BLAST COMMENTS including fragmentation, muckpile configuration, and flyrock (use additional paper if needed)

_____

_____

_____

_____

SIGNATURE (Blaster in charge): _____ Date: _____

License Number: _____ Expiration Date: _____

PART H
AVALANCHE CONTROL

WAC **Page**

WAC 296-52-800 Avalanche control. 1
WAC 296-52-802 Acceptable warning signs for typical avalanche control devices (duds). 2
WAC 296-52-803 Storage, makeup, and use of explosives for avalanche control blasting. 4
WAC 296-52-805 Hand charge makeup methods. 6
WAC 296-52-807 Avalanche control blasting. 12
WAC 296-52-809 Retrieving misfired explosives (duds). 16

WAC 296-52-800 Avalanche control.

(1) General.

(a) During periods of high avalanche danger, areas in avalanche paths shall not be opened for use until trained personnel have evaluated conditions and determined whether avalanche control work is necessary.

(b) When avalanche control work is deemed necessary, areas in the potential avalanche path shall be closed until the risk of avalanches has been reduced to a level determined appropriate by trained personnel.

(c) An avalanche shall not be purposely released until the avalanche path and potential runout zone are clear of personnel and vehicles.

(d) Avalanche guards, signs, and/or barricades shall be positioned at normal entrances to the avalanche path if there is any chance that personnel and vehicles will enter the danger zone during intentional release activities.

(e) During very unstable snow conditions, release of one avalanche may trigger sympathetic releases over a wide area. Avalanche workers shall consider such possibility and clear the appropriate areas of personnel and vehicles.

(2) Personnel and equipment.

(a) The avalanche control crew shall be adequately trained and physically capable for tasks which can be anticipated in their individual job assignments.

(b) No person shall accept or be given a job assignment which is beyond the individual's physical ability or training.

(c) On-slope assignments which include potential exposure to avalanche hazards shall only be conducted by fully qualified and fully equipped control crew members.

(d) The control crew may be split up into smaller groups (teams) to work on multiple areas simultaneously provided that each team consists of at least 2 qualified members.

(e) Each avalanche control crew or team shall have one or more designated rescue coordinators as is deemed necessary to maintain communications. Compliance with this requirement may be achieved by designating control crew teams to serve as each others' rescue coordinator provided that the teams are reasonably proximate to each other and do in fact maintain frequent communications.

(f) Each avalanche control crew member shall be equipped for continuous 2-way communications to the avalanche crew coordinators.

(g) The avalanche crew or teams shall not be assigned to on-slope areas where they cannot maintain communications with their designated coordinator. This requirement may be met by the use of a relay person; however, if any team completely loses communications, they shall return directly to base via the safest route available.

(h) Each person on an avalanche control team shall be equipped with a shovel and an electronic transceiver before commencing on-slope control work. The transceiver shall be in the transmit position whenever personnel are performing on-slope job assignments.

(3) Avalanche rescue plan. All employers with avalanche control personnel shall have a written avalanche rescue plan. The plan shall require:

(a) All rescue personnel who will be assigned to on-slope activities shall:

(i) Be competent skiers;

(ii) Have a current first-aid card;

WAC 296-52-800 (Cont.)

(iii) Be thoroughly trained in the rescue plan details;

(b) A specific list of required equipment for rescue crew personnel including:

(i) Probes;

(ii) Belaying rope;

(iii) Shovels;

(iv) 2-way communication radios;

(v) Electronic transceivers;

(c) A list of rescue equipment locations;

(d) Specific rescue procedures to be followed.

WAC 296-52-802 Acceptable warning signs for typical avalanche control devices (duds).

DANGER
EXPLOSIVES ON THE MOUNTAIN

Unexploded warheads, projectiles, or hand charges used in avalanche control may be found in target areas or in avalanche runout zones.

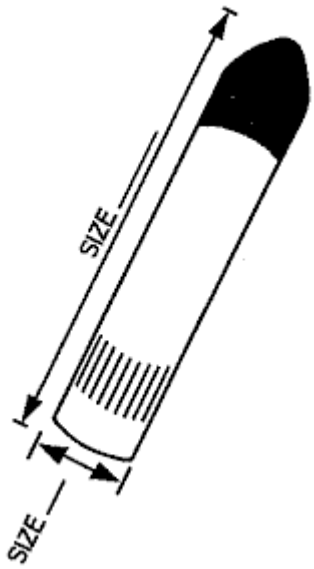

UNEXPLODED WARHEADS
WARHEAD MAY BE DISTORTED
FROM IMPACT.

WAC 296-52-802 (Cont.)

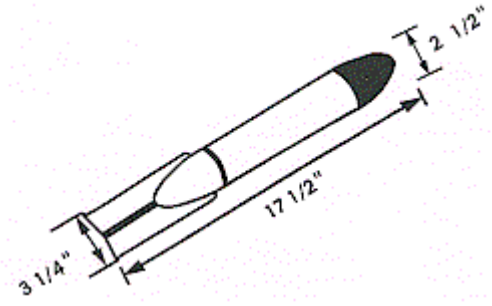

AVALAUNCHER PROJECTILE
RED OPAQUE BODY,
RED TRANSLUCENT FINS.

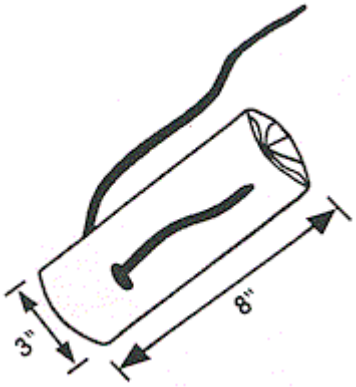

DYNAMITE HANDCHARGE
COLORED WRAPPING,
WILL USUALLY HAVE FUSE.

WAC 296-52-802 (Cont.)

If you find an unexploded (dud) charge, do the following:

1. Do not disturb or touch!
2. Mark the location within 5 to 10 feet.
3. Immediately report the location.

WAC 296-52-803 Storage, makeup, and use of explosives for avalanche control blasting.

(1) General.

(a) The storage, handling, and use of explosives and blasting agents used in avalanche control practices shall comply with this chapter and chapter 70.74 RCW.

(b) The minimum requirements published in chapter 296-52 WAC, Part H, shall be applicable to the storage, handling, and use of explosives and blasting agents in the endeavor of avalanche control.

(2) Management responsibility.

(a) Explosives and blasting agents shall not be stored in any regularly occupied areas or buildings except in compliance with this chapter.

(b) Explosives and blasting agents shall not be assembled or combined to form armed charges in any regularly occupied area or building except in compliance with this chapter.

(3) Personnel.

(a) Only fully qualified and licensed blasters shall be permitted to assemble or arm explosives components.

(b) Training shall include avalanche blasting experience so that the problems encountered in cold weather blasting are known factors.

(c) All training activities shall be conducted under the attended supervision of a fully qualified and licensed blaster.

(4) General requirements.

(a) Initiating systems for hand-placed or hand-thrown charges.

(i) The ignition system on single-unit hand-thrown charges shall consist of a nonelectric cap or shock tube and approved initiation system.

(ii) Multiple units combined to form a single hand-placed charge may use the above system, an approved detonating cord system or shock tube system. No other ignition system shall be permissible without specific approval by the department.

(iii) When using a shock tube system, after all charges are in place, connected to the shock tube trunk line and ready for initiation, the shock tube initiation tool shall be attached for firing.

(b) Multiple charge blasts.

(i) Detonating cord or shock tube system shall be used in lieu of blasting wire to connect multiple charge blasts.

(ii) When using detonating cord systems, after all charges are placed, connected to the detonating cord, and the charges are ready to be ignited, a safety fuse and cap shall be attached to the detonating cord. A fuse igniter may then be attached to ignite the safety fuse.

WAC 296-52-803 (Cont.)

(c) Blasting caps shall be no larger than No. 8 except when recommended by the explosives manufacturer for a particular explosive used within a specific application.

(d) Electric blasting caps are not permitted.

(e) Safety fuse and shock tube.

(i) Only the highest quality safety fuse with excellent water resistance and flexibility shall be used.

(ii) Shock tube systems may be used in place of fuse cap and safety fuse systems.

(f) Fuse length.

(i) Safety fuse length shall be selected to permit the control team adequate escapement time from the blast area under all reasonable contingencies (falls, release of bindings, etc.)

(ii) In no instance shall a fuse length with less than 90 seconds burn time be permitted.

(iii) The burn time of each roll of safety fuse shall be checked prior to use.

(iv) Checked rolls shall be marked with the tested burn time.

(v) It is recommended that all hand charges be prepared for ignition with either one safety fuse and igniter or a double safety fuse and igniters.

Note: Standard safety fuse burns at a rate of 40 to 55 seconds at 2500 meters elevation. This rate equates to approximately 24 inches fuse length for 90 second hand charge fuses at normal avalanche control elevations, but fuse burn rate should be checked before each use.

(5) Explosives.

(a) Explosives chosen shall have a safe shelf life of at least one operating season in the storage facilities in which it will be stored.

(b) Explosives chosen shall have excellent water and freezing resistance.

(c) Industrial primers (or boosters) that consist mainly of TNT or gelatin are the recommended explosives.

(6) Transporting explosives and hand charges.

(a) Hand charges or explosives components shall be transported in approved type avalanche control packs, in United States Department of Transportation-approved shipping containers or in licensed magazines.

(b) Criteria for avalanche control packs.

(i) The pack shall be constructed of water resistant material.

(ii) Packs shall be constructed with sufficient individual compartments to separate hand charges or explosives components from tools or other equipment or supplies which may be carried in the pack.

(iii) Each compartment used for hand charges or explosives components shall have an independent closure means.

(iv) If fuse igniters will be permitted to be carried on the avalanche control pack, a separate compartment with individual closure means shall be attached to the outside of the exterior of the pack.

WAC 296-52-803 (Cont.)

(c) Use of avalanche control packs.

(i) Packs shall be inspected daily, prior to loading, for holes or faulty compartment closures. Defective packs shall not be used until adequately repaired.

(ii) Tools or other materials shall not be placed in any compartment which contains hand charges or explosives components.

(iii) Fuse igniters shall never be placed anywhere inside the pack when the pack contains hand charges or other explosives components.

(iv) Fuse igniters may be carried in a separate compartment attached to the outside of the pack exterior but preferably in a compartment attached to the front of the carrying harness. Another acceptable alternative is to carry the igniters in a jacket pocket completely separate from the pack.

(v) Hand charges or explosives components shall not be stored or left unattended in avalanche control packs. Unused hand charges shall be promptly disassembled at the end of individual control routes and all components returned to approved storage.

(vi) Individual control team members shall not carry more than 35 pounds of hand charges in avalanche control packs.

(vii) A hand charge or cap and fuse assembly which has a fuse igniter attached shall never be placed in an avalanche control pack for any reason.

(d) Whenever explosives or explosives components are transported in or on any vehicle powered by an internal combustion engine, provisions shall be made to ensure that said explosives or containers cannot come into contact with the hot exhaust system.

(e) Hand charges or explosives components shall not be transported in spark-producing metal containers.

(f) Hand charges shall not be transported on public roads and highways when such roads or highways are open to the public. Explosives components shall only be transported on public roads or highways in compliance with United States Department of Transportation regulations.

WAC 296-52-805 Hand charge makeup methods.

General. The department shall recognize 2 permissible methods concerning hand charges for avalanche control blasting. The descriptions and requirements for each method are contained in this section.

Note: A well-designed and constructed hand charge makeup room can enhance the correct assembly of explosive components and reduce the incidences of misfires from incorrect makeup or moisture.

(1) Method I. Makeup at the blast site.

(a) The ignition system shall consist of a nonelectrical blasting cap and highest quality water resistant safety fuse, or detonating cord, assembled as recommended by the manufacturer.

(b) Detonating cord shall be used to connect separated multiple-charge blasts.

(c) No other ignition system shall be permissible on hand-placed or hand-thrown avalanche control charges unless variance is granted by the department.

(d) Caps shall be installed on correct length fuses prior to being transported out onto control routes.

(e) Caps shall only be crimped with a crimper tool approved for that purpose.

WAC 296-52-805 (Cont.)

(f) Assembling caps and fuses shall be done in a warm, dry, well-lighted environment. The location used for assembly shall not have flammable fuels, flammable gases, or explosives present where accidental detonation of the caps could create a secondary ignition or detonation hazard.

(g) Each cap shall be protected by a styrofoam shield or the equivalent before being placed in an avalanche control pack for transportation.

(h) A fuse igniter shall never be attached to a fuse until the fuse and cap assembly is installed in the hand charge at the blast site and the control crew is fully prepared to ignite the charge.

(i) All 1.1 explosives shall be attended as defined in this chapter at all times when the explosive is out of the Type 1 or 2 storage magazine.

(j) Disbursement of explosive charges from the Type 1 or 2 storage magazine into avalanche control packs shall be done outside the storage magazine. Records shall be maintained for all explosives disbursed.

(k) Caps, cap and fuse assemblies, armed hand charges, or fuse igniters shall not be carried into or stored in a Type 1 or 2 magazine which contains 1.1 explosives.

(2) Method II. Hand charge makeup room. This method is different from method I primarily in that the fuse and cap assembly is installed in the explosive charge while inside a special makeup room. The assembly procedure shall be as follows:

(a) Install caps on correct length fuses with an approved crimper tool before explosives are brought into the makeup room.

(b) The cap and fuse assemblies shall not be combined with explosives to form hand charges until just before the intended time of distribution.

(c) Only nonsparking skewers shall be used to punch holes in an explosives cartridge.

(d) The fuse shall be laced or taped in position after inserting the cap in the charge.

(e) Each hand charge shall be placed in an explosives box or avalanche control pack immediately after assembly is completed.

(f) No spark-producing metal tools shall be used to open explosives containers.

(g) Fuse igniters shall never be attached to a fuse or a hand charge until the hand charge is at the blast site and the control crew is fully prepared to ignite the charge.

(3) Makeup room requirements, procedures.

(a) Construction requirements.

(i) Makeup rooms located in accordance with the American Standard Quantity and Distance Tables for storage shall not require construction of reinforced concrete walls, floors, and doors. All other requirements of this chapter shall be applicable for such facilities.

(ii) Floors and walls. The floor and walls shall be constructed of reinforced concrete not less than eight inches thick. The rebar shall be not less than one-half inch diameter and shall be spaced on 12-inch vertical and horizontal centers. The rebar shall be bent at a 90 degree angle and extend a minimum of 24 inches into the adjoining floor or wall to secure each floor and wall joint.

WAC 296-52-805 (Cont.)

(iii) Roof. The roof is not limited to specific materials but shall provide both weather protection and standard snow loading protection for the region.

(iv) Access door(s).

(A) If a hinged door mounting is utilized, the hinge shall be mounted on the inside so that the door opens into the makeup room. In the fully closed position, in position to be locked, the door shall be a minimum of 2 inches larger than the access opening on all sides.

(B) If a flush door mounting is utilized, the door shall be mounted with a 2-inch decreasing taper on all sides of both the door and the concrete access opening to form a wedge seal.

(C) If a sliding door mounting is utilized, the mounting apparatus shall be on the inside of the makeup room and the door shall be a minimum of 2 inches larger than the access opening when the door is fully closed.

(D) Makeup room door may be either:

(I) Constructed to the same structural integrity and mounting requirements of (A) through (C) of this subsection; or

(II) Constructed of plywood not less than 2 inches thick and overlaid on the outside with a steel plate not less than one-eighth inch thick.

(III) If a door which complies with (II) of this subsection is used, a berm or barricade shall be installed within 6 feet of the door. The berm or barricade shall extend at least as high as the top of the door and shall be a minimum of 2 feet wider than the door on both sides of the door.

(E) For security purposes, one steel padlock having at least 5 tumblers and a case hardened shackle of at least three-eighths inch diameter is sufficient for locking purposes. Hinges and hasps shall be attached so that they cannot be removed from the outside when in the closed position and with the lock in place.

(v) Interior finish. The inside of all makeup rooms shall be finished and equipped to the following minimum requirements:

(A) Construction shall be fire resistant and nonsparking up to the top of the walls. Nails or screws shall be countersunk, blind nailed, or covered.

(B) Lighting shall be by N.E.C. explosion-proof rated fixtures and all wiring shall be in sealed conduit.

(C) Control switches shall be outside the makeup room.

(D) No electrical outlet boxes are permissible inside the room.

(b) Restrictions.

(i) Smoking, matches, open flames, or flame- or spark-producing devices shall not be permitted inside the makeup room.

(ii) Flammable liquids or flammable compressed gases shall not be stored in the makeup room.

(iii) Signs limiting entry to authorized personnel shall be posted on the door(s).

WAC 296-52-805 (Cont.)

(iv) A sign stating the occupancy rules shall be posted inside the makeup room where it is clearly legible upon entering the room. The sign shall post the following rules:

(A) Occupancy shall be restricted to specifically authorized personnel;

(B) Smoking, matches, flame- or spark-producing devices, tools or equipment shall not be permitted in the room at any time when explosives or explosive components are present; and

(C) Flammable fuels or compressed gases shall not be permitted inside the room nor stored within 50 feet of the room.

(v) Heating units shall be limited to:

(A) Forced air systems with the heating unit located outside the room.

(B) Steam systems of 15 psig or less.

(C) Hot water systems of 130°F or less.

(D) The radiant heating coils and piping for steam or hot water systems shall be protected so that explosives cannot come into contact with them.

(E) Heating ducts shall be installed so that the hot air does not discharge directly on explosives.

(F) The heating system used in a makeup room shall have controls which prevent the ambient room temperature from exceeding 130°F.

(vi) The makeup room shall be equipped with a portable fire extinguisher of at least 2A-20BC rating.

Note: For additional requirements relating to portable fire extinguishers see WAC 296-800-300.

(vii) Ventilation.

(A) The makeup room shall be equipped with a ventilation system capable of maintaining a minimum rate of three air exchanges per hour during all times when explosives are present in the room.

(B) Fans and controls shall be located outside the makeup room and shall be of a type approved for this service.

(C) The lighting circuit control shall also activate the ventilation fan and the ventilation fan shall be operated whenever personnel are in the room.

(D) Exhaust ventilation shall be arranged to discharge into outside air, not into an enclosed structure.

(viii) The floor or exterior walls may be constructed with duct openings for heating and ventilation purposes provided that:

(A) Each duct opening is not greater in volume than 72 square inches;

(B) The combined number of duct openings shall not exceed 3;

(C) Duct openings shall be located within 12 inches of the floor or ceiling;

(D) The exhaust duct opening shall not be located on the wall above the makeup workbench.

WAC 296-52-805 (Cont.)

(c) Practices and procedures.

(i) When explosives are present in the makeup room, entry into the makeup room shall be restricted to trained and authorized personnel.

(ii) The access door(s) to the makeup room shall be kept locked or bolted from the inside while employees are assembling explosives.

(iii) The entire makeup room shall be kept clean, orderly, and free of burnable rubbish.

(iv) Brooms and other cleaning utensils shall not have any spark-producing metal parts if used when explosives are present.

(v) Sweepings and empty explosives containers shall be disposed of as recommended by the explosives supplier.

(vi) Repair activities which utilize spark-producing tools shall not be conducted on any part of the makeup room while explosives are present.

(d) Storage of explosives.

(i) A makeup room shall not be used for the unattended storage of 1.1 explosives.

(ii) A makeup room which meets all requirements of this chapter may contain a Type 3 storage facility, for one thousand or less blasting caps.

(iii) A Type 3 storage facility shall be constructed according to the requirements in WAC 296-52-70030 through 296-52-70040.

(A) A Type 3 storage facility shall be fire resistant and theft resistant. It does not need to be bullet resistant and weather resistant if the locked makeup room provides protection from weather and bullet penetration.

(B) Sides, bottoms, and covers shall be constructed of not less than number 12 gauge metal and lined with a nonsparking material.

(C) Hinges and hasps shall be attached so that they cannot be removed from the outside.

(D) One steel padlock having at least five tumblers and a case-hardened shackle of at least three-eighths inch diameter is sufficient for locking purposes. The lock and hasp is not required to be equipped with a steel hood.

(e) Location.

(i) The makeup room shall be located in accordance with the American Quantity and Distance Separation Tables as adopted in chapter 70.74 RCW, Washington State Explosives Act and this chapter except under conditions as indicated in this section.

(ii) Where locating the makeup room in accordance with the quantity and distance separation table is impractical because of bad weather accessibility, rough terrain, or space availability:

(A) Upon application the department will issue a variance enabling location of the makeup room, by mutual agreement, at the safest possible location within the limitation of the individual base area.

WAC 296-52-805 (Cont.)

(B) The safest possible location will be the location most isolated from assembly areas and buildings that are inhabited with application of additional protection measures such as:

(I) Berming.

(II) Locating natural obstructions or buildings that are not inhabited between the makeup room and assembly areas and buildings that are inhabited.

(III) Limitations on the total quantity of explosives in the makeup room at any one time.

(iii) Makeup rooms designed to hold the boxes of explosives awaiting makeup and the madeup explosives in avalanche control packs awaiting distribution may be located using the total quantity of explosives allowed at the makeup table at any one time as the referenced quantity of explosives provided.

(A) The makeup room is located in accordance with the American Quantity and Distance Separation Tables as adopted in chapter 70.74 RCW, Washington State Explosives Act and this chapter for the referenced quantity of explosives at the makeup table.

(I) This separation shall apply only to human proximity to the makeup room and only at such time as there are explosives in the makeup room.

(II) When the makeup room does not contain explosives the separation tables shall not apply.

(B) The concrete walls of the room are designed to withstand the explosion of the total amount of the referenced explosives.

(I) The concrete walls must be constructed in accordance with specifications designed and certified by a licensed engineer; or

(II) The concrete walls must be constructed to the specifications of Department of the Army TM5-1300 “Structures to Resist the Effects of Accidental Explosions” designed to produce walls which will withstand explosion of the referenced quantity explosives.

(C) The boxes of explosives awaiting makeup and the madeup explosives in avalanche control packs awaiting distribution are located behind separate concrete debris barrier walls which will ensure that detonation of these explosives will not occur if the explosives at the makeup table detonate.

(I) The concrete debris barrier wall must be constructed in accordance with specifications designed and certified by a licensed engineer; or

(II) The concrete debris barrier wall must be constructed to the specifications of Department of the Army TM5-1300 “Structures to Resist the Effects of Accidental Explosions” to produce a barrier which will not allow detonation of the explosives awaiting makeup and distribution should the referenced quantity of explosives detonate.

WAC 296-52-805 (Cont.)

(III) Access from the makeup table to the area behind the concrete debris barrier walls shall not be doored. The concrete debris barrier walls will be designed so that the access way from the makeup table to the area behind the concrete debris barrier wall will deflect debris from an explosive blast by inherent design.

(D) The roof shall be designed so that the resistance to an interior explosive blast will be negligible.

(iv) A full containment makeup room may be located anywhere and must meet the following requirements:

(A) The makeup room must be constructed in accordance with a licensed explosive engineer's approved design.

(B) The total amount of explosives in the room at any time must not exceed the design limit of the room.

(C) The makeup room cannot be used for storage.

WAC 296-52-807 Avalanche control blasting.

(1) The employer shall ensure that all members of avalanche control blasting crews are competent ski mountaineers in good physical and mental condition.

(2) Each avalanche control blasting crew or team shall consist of a qualified and licensed blaster and at least one trained assistant.

(3) Untrained personnel may accompany blasting crews for training purposes but shall not participate in actual firing of charges until trained and authorized.

(4) The blaster in charge of each crew or team shall be responsible for all phases of preparation and placement of charges.

(5) Avalanche control blasting should be conducted during daylight hours whenever possible.

(6) Escape route.

(a) The avalanche control crew or team shall preplan the escape route before igniting any charge.

(b) The escape route shall be as safe and foolproof as possible and shall culminate behind a terrain barrier or at least 100 feet from the blast site by the time of detonation.

(7) Hand-thrown charges.

(a) A blaster shall only work with one charge at a time.

(b) Before attaching the igniter, the blaster must:

(i) Be at the start of the escape route;

(ii) Check the runout zone for personnel;

(iii) Check the blast area for personnel.

WAC 296-52-807 (Cont.)

(c) After the blaster attaches and activates the igniter:

(i) The blaster shall check to see that the fuse is ignited;

(ii) If the fuse did not ignite, no attempt shall be made to relight it. The blaster shall immediately remove the fuse cap from the charge to sidearm it. The fuse cap shall be treated as a misfire and be put in an appropriately safe place separate from all other explosive components. It shall not be approached for at least 30 minutes, after which time it shall be properly disposed of;

(iii) The practice of double fusing hand charges shall be allowed. An attempt shall be made to light both fuses. If only one of the 2 fuses lights, the charge shall be deployed as normal;

(iv) As soon as the fuse is ignited, the blaster shall promptly throw the charge into the target area;

(v) All personnel shall be in a safe place when the charge detonates.

(d) Where hand-thrown charges will slide down the hill on hard frozen snow or ice surface, charges shall be belayed with light cord.

(8) Hand charges thrown from ski lifts or trams.

(a) The number of charges thrown from ski lifts or trams shall be kept to a minimum.

(b) The lift operating crew shall be informed of the blasting plans.

(c) The lift crew shall stand by for emergency procedures such as transfer of lift onto auxiliary power, evacuation, etc.

(d) The lift crew and the blaster in charge shall be in direct radio contact at all times during the blasting operations.

(e) Only the avalanche control blasting crew and the essential lift operating personnel shall be on a lift or tram during blasting operations.

(f) The avalanche control blasting crew shall be traveling up slope when a charge is thrown.

(g) A charge shall always be thrown down slope and to the side, away from towers, haulropes and other equipment or facilities.

(h) The minimum distance from the blast target to the closest point of the lift shall be 60 feet.

(i) Hand charges shall not exceed 4.5 pounds of TNT equivalent.

(j) Fuses shall be timed and cut to such length that all personnel on the lift will have moved a minimum of 300 feet from the blast target by the time of detonation.

(k) Precautions shall be taken to avoid tossing charges into any of the lift equipment, moving chairs, cables, towers, etc.

(9) Aerial avalanche control blasting.

(a) Blasting from aircraft shall require a written program approved by the Federal Aviation Administration and the director, or designee of the department of labor and industries.

(b) A written program shall include the following:

(i) Written procedures to be followed including provisions for safety in the avalanche runout zone and emergency rescue plans.

(ii) Hand charge makeup and handling procedures.

WAC 296-52-807 (Cont.)

(iii) The type of explosives to be used.

(iv) The qualifications of all avalanche control personnel involved in aerial blasting must meet the requirements of WAC 296-52-64030.

(v) The specific locations where aircraft blasting is to take place.

(c) An aerial avalanche control team shall be established consisting of (at minimum) a pilot, a blaster in charge and an observer/controller.

(d) Blasting from an aircraft shall require the blaster in charge to be a licensed avalanche blaster with an endorsement for aerial blasting. The blaster in charge will be on board during each aerial blasting mission.

Note: *Blasting from aircraft should only be used when it is determined that conventional methods are not the safest means to mitigate the existing avalanche hazard.*

(10) Avalauncher requirements.

(a) Management shall develop a written training program and ensure that every person who will be authorized to work on an avalauncher firing team is thoroughly trained. Training shall include:

(i) All operating instructions;

(ii) Safety precautions;

(iii) Emergency procedures;

(iv) Securing requirements for the equipment.

(b) Each employer shall have a list of authorized operators listed on a posted operator's list.

(c) Only trained and authorized personnel shall be permitted to point and fire an avalauncher with explosive rounds.

(d) During firing of explosive loaded rounds, the firing team shall consist of 2 qualified operators and not more than one adequately trained helper.

(e) Operators must have a current state blasting license.

(f) Each operator shall individually check the elevation, pointing and pressure settings of the gun before each shot is fired.

(g) Operators shall attempt to determine and record whether or not each round which is fired actually explodes on contact.

(h) The approximate location of all known misfired explosives (or duds) shall be recorded.

(i) Initial shooting coordinates for each avalauncher mount shall be made during periods of good visibility.

(j) Testing shall include test firing in various wind conditions.

(k) The correct coordinates for the various conditions encountered shall be carefully recorded.

(l) When spotter personnel are used in the target area, shooting shall be conducted with nonexplosive projectiles.

(m) Firing of explosive avalauncher rounds shall only be conducted when personnel are not in the target area.

WAC 296-52-807 (Cont.)

(n) The avalauncher apparatus shall be stored in a nonfunctional condition when not in use. This shall be accomplished by:

(i) Locking out the firing mechanism or gas source in accordance with the lockout requirements of this chapter; or

(ii) Disassembly of functional components rendering the gun inoperable and separate storage of components removed; or

(iii) Removal of the entire gun to secure storage.

(o) With established avalauncher mounts, each autumn when reinstalling guns, the following procedures shall be accomplished before the gun is considered operable:

(i) All components shall be carefully inspected by qualified personnel;

(ii) After assembly and installation, the gun shall first be test fired using a nonexplosive projectile;

(iii) The established firing coordinates shall be checked by test firing.

(11) Cornice control requirements.

(a) Cornice buildup hazards shall be evaluated regularly by qualified personnel, particularly after heavy snowfall periods which are accompanied by high wind or other snow transport weather conditions.

(b) Cornice hazards shall be controlled whenever the buildup appears to offer potential hazard to areas accessible by personnel.

(c) The control team shall establish the tension breakline of the cornice roof as accurately as conditions permit before starting any other control work on the cornice.

(d) The tension breakline shall be marked when necessary.

(e) Small lightly packed cornices may be kicked off with a ski, ski pole, or shovel by an unbelayed control team member if the ridgeline can be clearly established and all work can be done from the safe side of the ridgeline.

(f) When working along an anticipated cornice breakline, control team members shall retreat back from the breakline to change work positions rather than traverse along the breakline.

(g) The following factors shall be given careful consideration before commencing control activities on any relatively larger cornice:

(i) The older and larger a cornice becomes, the more densely it compacts. Densely packed cornices release into larger blocks offering a higher level of danger to an extended runout zone. The control team leader shall therefore take highest level of precautions to assure that the runout zone is clear of personnel;

(ii) Larger size cornices result in increased suspended weight and leverage which may cause the breakline release fracture to occur behind the actual ridgeline. The actual ridgeline may also be obscured by the simple mass of larger cornices. Control team members shall stay off the cornice roof and must be protected by a secure belay when working near the suspected breakline;

WAC 296-52-807 (Cont.)

(iii) All large cornices shall be released by explosives. Explosives shall be transported, made up and fired in accordance with the following requirements:

(A) The ignition system for single hand charge blasts shall be safety fuse and cap or a system approved by the department.

(B) Detonating cord or shock tube shall be used to connect multiple charge blasts.

(C) When detonating cord is used, one end shall be securely anchored where premature cornice collapse will not disturb the anchor. The fuse and cap shall be attached to the free end of the detonating cord after all charges are connected to the detonating cord.

(D) Safety fuse length shall be sufficient to permit adequate escapement time for all personnel from the area influenced by the blast. Safety fuse shall be not less than three feet long, approximately 2 minutes and 20 seconds, in all instances.

(h) Cornice control work on large cornices shall be conducted during daylight hours and preferably during favorable weather conditions. As a minimum, clear visibility shall exist across the full length of any cornice which the control team is attempting to release.

(12) Belaying practices.

(a) Belay rope shall be standard 11 mm mountaineering rope or the equivalent.

(i) Belay rope shall be inspected at not less than 30-day intervals and maintained in excellent condition.

(ii) Defective belay rope shall not be used for belaying purposes.

(b) Adequate trees or other suitable natural belay anchors shall be used in preference to a human belay anchor when such natural anchors are available.

(c) The belay anchor position shall be as near to ninety degrees from the tension breakline as the terrain conditions will permit.

(d) With either a natural belay anchor or human belay anchor, the belay line shall be tended to keep slack out of the line.

(e) When either the belayed person or belay anchor needs to change position, the belayed person shall retreat back from the cornice to a safe position until the belay anchor is reestablished.

(f) When a human belay anchor is used:

(i) The belay anchor person shall establish the anchor position as far back away from the cornice as conditions permit;

(ii) The anchor person shall remain in a seated position with their legs pointed toward the belayed person until such time as the belayed person has retreated back from the cornice to a position considered to be safe.

WAC 296-52-809 Retrieving misfired explosives (duds).

(1) The following requirements shall apply to all kinds of avalanche control blasting:

(a) Each person who ignites a charge or propels a charged projectile with any kind of apparatus shall note whether or not the charge actually detonates.

WAC 296-52-809 (Cont.)

(b) A conscientious effort shall be made to promptly retrieve any misfired explosives.

(i) If conditions make it impractical or dangerous to promptly retrieve a misfired explosive, a search shall be conducted as soon as conditions permit.

(ii) Any area which contains a misfired explosive shall be closed to entry to all personnel except the search team until such time as the area has been searched and pronounced safe by the designated search leader.

(c) When searching for a misfired explosive on an uncontrolled avalanche slope (a slope which hasn't released), the procedures used shall be consistent with good mountaineering practices.

(d) A hand charge misfire shall not be approached for at least 30 minutes.

(e) A hand charge or avalauncher misfired explosive may be blown up with a secondary charge where they are found or may be disarmed at that location by fully trained and qualified personnel.

(f) Military warhead misfired explosives shall not be moved. They shall be blown up where they are found by secondary charges except that trained military personnel may disarm and transport such misfired explosives when approved by the governmental branch having jurisdiction.

(2) Records.

(a) Accurate records shall be maintained for every explosive device which does not detonate.

(b) Misfired explosives records shall include the following information:

(i) The suspected location;

(ii) A description of the misfired explosive;

(iii) The date the misfired explosive was lost;

(iv) The date the misfired explosive was found and disposed of.

(3) Misfired explosive frequency.

(a) Misfired explosive frequency should be maintained below one misfired explosive for every 500 detonating attempts.

(b) All employers who do not maintain a misfired explosive frequency below one misfired explosive per 500 detonation attempts shall investigate all aspects of the blasting program and take prompt corrective actions as indicated.

(4) Misfired explosives warning signs.

(a) Requirements for warning signs. Ski area operations which use any form of explosive device for avalanche control shall display warning, information placards and/or signs as found in this chapter, Part H.

(b) Signs shall be posted at readily visible locations and in such a manner as to give both employees and the public ample opportunity to be informed of the potential existence of misfired explosive avalanche charges. Locations may include but are not limited to:

(i) Ticket sales and lift loading areas;

(ii) Food and beverage service facilities;

WAC 296-52-809 (Cont.)

(iii) Restrooms and locker rooms;

(iv) Safety bulletin boards;

(v) Along general access routes.

(c) Signs shall be distinctive in appearance from the surrounding background where they are posted.

(d) Signs shall be maintained in legible condition.

(e) Signs shall include the following information:

(i) The word "WARNING" or "DANGER" at the top of the sign in the largest lettering on the sign;

(ii) The words "EXPLOSIVES ON THE MOUNTAIN";

(iii) A colored pictorial illustration which also provides information on dimensions of each type of explosive device used in the area;

(iv) The sign wording shall conclude with specific instructions to be followed by anyone who locates an unexploded explosive device.

Statutory Authorities
Possession, Handling and Use of Explosives

PART A PURPOSE, SCOPE, AND APPLICATION

296-52-60005 Implementation of the Washington State Explosives Act.
[Statutory Authority: RCW 49.17.010, .040, and .050. 02-03-125 (Order 01-34), § 296-52-60005, filed 01/23/02, effective 03/01/02.]
296-52-60010 Purpose and intent
[Statutory Authority: RCW 49.17.010, .040, and .050. 02-03-125 (Order 01-34), § 296-52-60010, filed 01/23/02, effective 03/01/02.]
296-52-60015 Coverage.
[Statutory Authority: RCW 49.17.010, .40, .050, and .060. 06-19-074 (Order 05-42), § 296-52-60015, filed 09/19/06, effective 12/01/06. Statutory Authority: Statutory Authority: RCW 49.17.010, .040, and .050. 02-03-125 (Order 01-34), § 296-52-60015, filed 01/23/02, effective 03/01/02.]
296-52-60020 Exemptions.
[Statutory Authority: RCW 49.17.010, .040, .050, .060, and 70.74.020. 14-08-024 (Order 13-21), § 296-52-60020, filed 03/24/14, effective 05/01/14. Statutory Authority: RCW 49.17.010, .40, .050, and .060. 06-19-074 (Order 05-42), § 296-52-60020, filed 09/19/06, effective 12/01/06. Statutory Authority: RCW 49.17.010, 49.17.040, 49.17.050, and 49.17.060. 03-06-073 (Order 02-34), § 296-52-60020, filed 03/04/03, effective 08/01/03. Statutory Authority: RCW 49.17.010, .040, and .050. 02-03-125 (Order 01-34), § 296-52-60020, filed 01/23/02, effective 03/01/02.]
296-52-60030 The department.
[Statutory Authority: RCW 49.17.010, .040, and .050. 02-03-125 (Order 01-34), § 296-52-60030, filed 01/23/02, effective 03/01/02.]
296-52-60035 Other government entities.
[Statutory Authority: RCW 49.17.010, .040, and .050. 02-03-125 (Order 01-34), § 296-52-60035, filed 01/23/02, effective 03/01/02.]
296-52-60045 Responsibility to obtain an explosives license.
[Statutory Authority: RCW 49.17.010, .040, and .050. 02-03-125 (Order 01-34), § 296-52-60045, filed 01/23/02, effective 03/01/02.]
296-52-60050 Unlicensed activities.
[Statutory Authority: RCW 49.17.010, .040, and .050. 02-03-125 (Order 01-34), § 296-52-60050, filed 01/23/02, effective 03/01/02.]
296-52-60055 Drug use.
[Statutory Authority: RCW 49.17.010, .040, and .050. 02-03-125 (Order 01-34), § 296-52-60055, filed 01/23/02, effective 03/01/02.]
296-52-60060 License revocation, suspension, and surrender.
[Statutory Authority: RCW 49.17.010, .040, and .050. 02-03-125 (Order 01-34), § 296-52-60060, filed 01/23/02, effective 03/01/02.]
296-52-60065 Violation appeals.
[Statutory Authority: RCW 49.17.010, .040, and .050. 02-03-125 (Order 01-34), § 296-52-60065, filed 01/23/02, effective 03/01/02.]
296-52-60075 Hazards to life.
[Statutory Authority: RCW 49.17.010, .040, and .050. 02-03-125 (Order 01-34), § 296-52-60075, filed 01/23/02, effective 03/01/02.]
296-52-60080 Entry and access to explosive areas.
[Statutory Authority: RCW 49.17.010, .040, and .050. 02-03-125 (Order 01-34), § 296-52-60080, filed 01/23/02, effective 03/01/02.]
296-52-60085 Abandonment of explosives.
[Statutory Authority: RCW 49.17.010, .040, and .050. 02-03-125 (Order 01-34), § 296-52-60085, filed 01/23/02, effective 03/01/02.]
296-52-60090 Firearms.
[Statutory Authority: RCW 49.17.010, .040, and .050. 02-03-125 (Order 01-34), § 296-52-60090, filed 01/23/02, effective 03/01/02.]

PART A PURPOSE, SCOPE, AND APPLICATION (Cont.)

296-52-60095 Fire.
[Statutory Authority: RCW 49.17.010, .040, and .050. 02-03-125 (Order 01-34), § 296-52-60095, filed 01/23/02, effective 03/01/02.]

296-52-60100 Daylight blasting.
[Statutory Authority: RCW 49.17.010, .040, and .050. 02-03-125 (Order 01-34), § 296-52-60100, filed 01/23/02, effective 03/01/02.]

296-52-60105 Notification-Blasting near utilities.
[Statutory Authority: RCW 49.17.010, .040, and .050. 02-03-125 (Order 01-34), § 296-52-60105, filed 01/23/02, effective 03/01/02.]

296-52-60115 Explosive industry employers.
[Statutory Authority: RCW 49.17.010, .040, and .050. 02-03-125 (Order 01-34), § 296-52-60115, filed 01/23/02, effective 03/01/02.]

296-52-60120 Variance from a chapter requirement.
[Statutory Authority: RCW 49.17.010, .040, and .050. 02-03-125 (Order 01-34), § 296-52-60120, filed 01/23/02, effective 03/01/02.]

296-52-60125 Using standards from national organizations and federal agencies.
[Statutory Authority: RCW 49.17.010, .040, and .050. 02-03-125 (Order 01-34), § 296-52-60125, filed 01/23/02, effective 03/01/02.]

296-52-60130 Definitions.
[Statutory Authority: RCW 49.17.010, .40, .050, and .060. 06-19-074 (Order 05-42), § 296-52-60130, filed 09/19/06, effective 12/01/06. Statutory Authority: RCW 49.17.010, .040, .050, and .060. 05-08-110 (Order 04-43), § 296-52-60130, filed 04/05/05, effective 06/01/05. Statutory Authority: RCW 49.17.010, 49.17.040, 49.17.050, and 49.17.060. 03-06-073 (Order 02-34), § 296-52-60130, filed 03/04/03, effective 08/01/03. Statutory Authority: RCW 49.17.010, .040, and .050. 02-03-125 (Order 01-34), § 296-52-60130, filed 01/23/02, effective 03/01/02.]

Statutory Authorities
Possession, Handling and Use of Explosives

PART B EXPLOSIVE LICENSING

296-52-61005 Types of explosive licenses.
[Statutory Authority: RCW 49.17.010, .040, and .050. 02-03-125 (Order 01-34), § 296-52-61005, filed 01/23/02, effective 03/01/02.]
296-52-61010 License applicants must provide this information.
[Statutory Authority: RCW 49.17.010, .040, .050, and .060. RCW 49.17.040, RCW 70.74.137, RCW 70.74.040, RCW 70.74.142, RCW 49.70.74.144, RCW 49.74.146, RCW 70.74.360, and Chapter 285, Laws of 2008. 08-15-139 (Order 08-09), § 296-52-61010, filed 07/22/08, effective 12/01/08. Statutory Authority: RCW 49.17.010, .040, and .050. 02-03-125 (Order 01-34), § 296-52-61010, filed 01/23/02, effective 03/01/02.]
296-52-61015 License applicants must complete department forms.
[Statutory Authority: RCW 49.17.010, .040, and .050. 02-03-125 (Order 01-34), § 296-52-61015, filed 01/23/02, effective 03/01/02.]
296-52-61020 License fees.
[Statutory Authority: RCW 49.17.010, .040, .050, and .060. RCW 49.17.040, RCW 70.74.137, RCW 70.74.040, RCW 70.74.142, RCW 49.70.74.144, RCW 49.74.146, RCW 70.74.360, and Chapter 285, Laws of 2008. 08-15-139 (Order 08-09), § 296-52-61020, filed 07/22/08, effective 12/01/08. Statutory Authority: RCW 49.17.010, .040, .050, and .060. 05-08-110 (Order 04-43), § 296-52-61020, filed 04/05/05, effective 06/01/05. Statutory Authority: RCW 49.17.010, .040, and .050. 02-03-125 (Order 01-34), § 296-52-61020, filed 01/23/02, effective 03/01/02.]
296-52-61025 Verification of applicant information.
[Statutory Authority: RCW 49.17.010, .040, and .050. 02-03-125 (Order 01-34), § 296-52-61025, filed 01/23/02, effective 03/01/02.]
296-52-61030 Applicant participation.
[Statutory Authority: RCW 49.17.010, .040, .050, and .060. RCW 49.17.040, RCW 70.74.137, RCW 70.74.040, RCW 70.74.142, RCW 49.70.74.144, RCW 49.74.146, RCW 70.74.360, and Chapter 285, Laws of 2008. 08-15-139 (Order 08-09), § 296-52-61030, filed 07/22/08, effective 12/01/08. Statutory Authority: RCW 49.17.010, .040, and .050. 02-03-125 (Order 01-34), § 296-52-61030, filed 01/23/02, effective 03/01/02.]
296-52-61035 Criminal records.
[Statutory Authority: RCW 49.17.010, .040, and .050. 02-03-125 (Order 01-34), § 296-52-61035, filed 01/23/02, effective 03/01/02.]
296-52-61040 Reasons why applicants may be disqualified.
[Statutory Authority: RCW 49.17.010, .40, .050, and .060. 06-19-074 (Order 05-42), § 296-52-61040, filed 09/19/06, effective 12/01/06. Statutory Authority: RCW 49.17.010, .040, .050, and .060. 03-10-037 (Order 03-06), § 296-52-61040, filed 04/30/03, effective 05/24/03. Statutory Authority: RCW 49.17.010, .040, and .050. 02-03-125 (Order 01-34), § 296-52-61040, filed 01/23/02, effective 03/01/02.]
296-52-61045 License terms.
[Statutory Authority: RCW 49.17.010, .040, .050, and .060. 05-08-110 (Order 04-43), § 296-52-61045, filed 04/05/05, effective 06/01/05. Statutory Authority: RCW 49.17.010, .040, and .050. 02-03-125 (Order 01-34), § 296-52-61045, filed 01/23/02, effective 03/01/02.]
296-52-61050 License renewal.
[Statutory Authority: RCW 49.17.010, .040, and .050. 02-03-125 (Order 01-34), § 296-52-61050, filed 01/23/02, effective 03/01/02.]
296-52-62005 Responsibility to obtain a dealer's license.
[Statutory Authority: RCW 49.17.010, .040, .050, and .060. 03-10-037 (Order 03-06), § 296-52-62005, filed 04/30/03, effective 05/24/03. Statutory Authority: RCW 49.17.010, .040, and .050. 02-03-125 (Order 01-34), § 296-52-62005, filed 01/23/02, effective 03/01/02.]
296-52-62010 Dealer applicant information.
[Statutory Authority: RCW 49.17.010, .040, .050, and .060. 05-08-110 (Order 04-43), § 296-52-62010, filed 04/05/05, effective 06/01/05. Statutory Authority: RCW 49.17.010, .040, and .050. 02-03-125 (Order 01-34), § 296-52-62010, filed 01/23/02, effective 03/01/02.]

PART B EXPLOSIVE LICENSING (Cont.)

296-52-62025 Prohibit explosives items from sale or display in these areas.
[Statutory Authority: RCW 49.17.010, .040, and .050. 02-03-125 (Order 01-34), § 296-52-62025, filed 01/23/02, effective 03/01/02.]
296-52-62030 Container labeling.
[Statutory Authority: RCW 49.17.010, .040, and .050. 02-03-125 (Order 01-34), § 296-52-62030, filed 01/23/02, effective 03/01/02.]
296-52-62035 Authorized agent information.
[Statutory Authority: RCW 49.17.010, .040, and .050. 02-03-125 (Order 01-34), § 296-52-62035, filed 01/23/02, effective 03/01/02.]
296-52-62040 Verification of customer identity.
[Statutory Authority: RCW 49.17.010, .040, and .050. 02-03-125 (Order 01-34), § 296-52-62040, filed 01/23/02, effective 03/01/02.]
296-52-62045 Recordkeeping and reporting.
[Statutory Authority: RCW 49.17.010, .040, and .050. 02-03-125 (Order 01-34), § 296-52-62045, filed 01/23/02, effective 03/01/02.]
296-52-63005 How to obtain a purchaser's license.
[Statutory Authority: RCW 49.17.010, .040, .050, and .060. 03-10-037 (Order 03-06), § 296-52-63005, filed 04/30/03, effective 05/24/03. Statutory Authority: RCW 49.17.010, .040, and .050. 02-03-125 (Order 01-34), § 296-52-63005, filed 01/23/02, effective 03/01/02.]
296-52-63010 Applicant information.
[Statutory Authority: RCW 49.17.010, .040, .050, and .060. 05-08-110 (Order 04-43), § 296-52-63010, filed 04/05/05, effective 06/01/05. Statutory Authority: RCW 49.17.010, .040, and .050. 02-03-125 (Order 01-34), § 296-52-63010, filed 01/23/02, effective 03/01/02.]
296-52-63020 Authorized agents.
[Statutory Authority: RCW 49.17.010, .040, and .050. 02-03-125 (Order 01-34), § 296-52-63020, filed 01/23/02, effective 03/01/02.]
296-52-63025 Explosive order deliveries.
[Statutory Authority: RCW 49.17.010, .040, and .050. 02-03-125 (Order 01-34), § 296-52-63025, filed 01/23/02, effective 03/01/02.]
296-52-63030 Notify the department of blaster changes.
[Statutory Authority: RCW 49.17.010, .040, and .050. 02-03-125 (Order 01-34), § 296-52-63030, filed 01/23/02, effective 03/01/02.]
296-52-64005 Responsibility to obtain a blaster's license.
[Statutory Authority: RCW 49.17.010, .40, .050, and .060. 06-19-074 (Order 05-42), § 296-52-64005, filed 09/19/06, effective 12/01/06. Statutory Authority: RCW 49.17.010, .040, .050, and .060. 05-08-110 (Order 04-43), § 296-52-64005, filed 04/05/05, effective 06/01/05. Statutory Authority: RCW 49.17.010, .040, and .050. 02-03-125 (Order 01-34), § 296-52-64005, filed 01/23/02, effective 03/01/02.]
296-52-64020 General qualifications for blasters.
[Statutory Authority: RCW 49.17.010, .040, and .050. 02-03-125 (Order 01-34), § 296-52-64020, filed 01/23/02, effective 03/01/02.]
296-52-64030 List A qualifications.
[Statutory Authority: RCW 49.17.010, .40, .050, and .060. 06-19-074 (Order 05-42), § 296-52-64030, filed 09/19/06, effective 12/01/06. Statutory Authority: RCW 49.17.010, .040, and .050. 02-03-125 (Order 01-34), § 296-52-64030, filed 01/23/02, effective 03/01/02.]
296-52-64035 List B qualifications.
[Statutory Authority: RCW 49.17.010, .040, and .050. 02-03-125 (Order 01-34), § 296-52-64035, filed 01/23/02, effective 03/01/02.]
296-52-64040 List C qualifications.
[Statutory Authority: RCW 49.17.010, .040, .050, and .060. 05-08-110 (Order 04-43), § 296-52-64040, filed 04/05/05, effective 06/01/05. Statutory Authority: RCW 49.17.010, .040, and .050. 02-03-125 (Order 01-34), § 296-52-64040, filed 01/23/02, effective 03/01/02.]

PART B EXPLOSIVE LICENSING (Cont.)

296-52-64045 Application.
[Statutory Authority: RCW 49.17.010, .040, and .050. 02-03-125 (Order 01-34), § 296-52-64045, filed 01/23/02, effective 03/01/02.]
296-52-64050 Blaster license applicant information.
[Statutory Authority: RCW 49.17.010, .040, .050, and .060. 05-08-110 (Order 04-43), § 296-52-64050, filed 04/05/05, effective 06/01/05. Statutory Authority: RCW 49.17.010, .040, and .050. 02-03-125 (Order 01-34), § 296-52-64050, filed 01/23/02, effective 03/01/02.]
296-52-64055 Blaster license testing.
[Statutory Authority: RCW 49.17.010, .040, and .050. 02-03-125 (Order 01-34), § 296-52-64055, filed 01/23/02, effective 03/01/02.]
296-52-64065 Blaster license limits.
[Statutory Authority: RCW 49.17.010, .040, and .050. 02-03-125 (Order 01-34), § 296-52-64065, filed 01/23/02, effective 03/01/02.]
296-52-64075 Blaster license disclosure.
[Statutory Authority: RCW 49.17.010, .040, and .050. 02-03-125 (Order 01-34), § 296-52-64075, filed 01/23/02, effective 03/01/02.]
296-52-64080 Purchaser disclosure.
[Statutory Authority: RCW 49.17.010, .040, and .050. 02-03-125 (Order 01-34), § 296-52-64080, filed 01/23/02, effective 03/01/02.]
296-52-64085 Changes to a blaster's license classification.
[Statutory Authority: RCW 49.17.010, .040, and .050. 02-03-125 (Order 01-34), § 296-52-64085, filed 01/23/02, effective 03/01/02.]
296-52-64090 Blaster license renewal.
[Statutory Authority: RCW 49.17.010, .040, .050, and .060. 05-08-110 (Order 04-43), § 296-52-64090, filed 04/05/05, effective 06/01/05. Statutory Authority: RCW 49.17.010, .040, and .050. 02-03-125 (Order 01-34), § 296-52-64090, filed 01/23/02, effective 03/01/02.]
296-52-64095 List A and B renewal qualifications.
[Statutory Authority: RCW 49.17.010, .040, .050, and .060. 05-08-110 (Order 04-43), § 296-52-64095, filed 04/05/05, effective 06/01/05. Statutory Authority: RCW 49.17.010, .040, and .050. 02-03-125 (Order 01-34), § 296-52-64095, filed 01/23/02, effective 03/01/02.]
296-52-64100 List C renewal qualifications.
[Statutory Authority: RCW 49.17.010, .040, .050, and .060. 05-08-110 (Order 04-43), § 296-52-64100, filed 04/05/05, effective 06/01/05. Statutory Authority: RCW 49.17.010, .040, and .050. 02-03-125 (Order 01-34), § 296-52-64100, filed 01/23/02, effective 03/01/02.]
296-52-650 Manufacturer's license.
[Statutory Authority: RCW 49.17.010, .040, and .050. 02-03-125 (Order 01-34), § 296-52-650, filed 01/23/02, effective 03/01/02.]
296-52-65005 Responsibility to obtain a manufacturer's license.
[Statutory Authority: RCW 49.17.010, .040, .050, and .060. 05-08-110 (Order 04-43), § 296-52-65005, filed 04/05/05, effective 06/01/05. Statutory Authority: RCW 49.17.010, .040, .050, and .060. 03-10-037 (Order 03-06), § 296-52-65005, filed 04/30/03, effective 05/24/03. Statutory Authority: RCW 49.17.010, .040, and .050. 02-03-125 (Order 01-34), § 296-52-65005, filed 01/23/02, effective 03/01/02.]
296-52-65010 Manufacturer applicant information.
[Statutory Authority: RCW 49.17.010, .040, .050, and .060. 05-08-110 (Order 04-43), § 296-52-65010, filed 04/05/05, effective 06/01/05. Statutory Authority: RCW 49.17.010, .040, and .050. 02-03-125 (Order 01-34), § 296-52-65010, filed 01/23/02, effective 03/01/02.]
296-52-65015 Manufacturing site inspections.
[Statutory Authority: RCW 49.17.010, .040, and .050. 02-03-125 (Order 01-34), § 296-52-65015, filed 01/23/02, effective 03/01/02.]
296-52-65020 Conditions of a manufacturer's license.
[Statutory Authority: RCW 49.17.010, .040, and .050. 02-03-125 (Order 01-34), § 296-52-65020, filed 01/23/02, effective 03/01/02.]

PART B EXPLOSIVE LICENSING (Cont.)

296-52-65025 Annual inspection.
[Statutory Authority: RCW 49.17.010, .040, and .050. 02-03-125 (Order 01-34), § 296-52-65025, filed 01/23/02, effective 03/01/02.]

296-52-65030 Site plan.
[Statutory Authority: RCW 49.17.010, .040, and .050. 02-03-125 (Order 01-34), § 296-52-65030, filed 01/23/02, effective 03/01/02.]

296-52-660 Storage license.
[Statutory Authority: RCW 49.17.010, .040, and .050. 02-03-125 (Order 01-34), § 296-52-660, filed 01/23/02, effective 03/01/02.]

296-52-66005 Responsibility to obtain a storage license.
[Statutory Authority: RCW 49.17.010, .040, .050, and .060. 05-08-110 (Order 04-43), § 296-52-66005, filed 04/05/05, effective 06/01/05. Statutory Authority: RCW 49.17.010, .040, .050, and .060. 03-10-037 (Order 03-06), § 296-52-66005, filed 04/30/03, effective 05/24/03. Statutory Authority: RCW 49.17.010, .040, and .050. 02-03-125 (Order 01-34), § 296-52-66005, filed 01/23/02, effective 03/01/02.]

296-52-66010 Storage applicant information.
[Statutory Authority: RCW 49.17.010, .040, .050, and .060. 05-08-110 (Order 04-43), § 296-52-66010, filed 04/05/05, effective 06/01/05. Statutory Authority: RCW 49.17.010, .040, and .050. 02-03-125 (Order 01-34), § 296-52-66010, filed 01/23/02, effective 03/01/02.]

296-52-66015 Storage site inspections.
[Statutory Authority: RCW 49.17.010, .040, and .050. 02-03-125 (Order 01-34), § 296-52-66015, filed 01/23/02, effective 03/01/02.]

296-52-66020 Demonstration of handling and storage experience.
[Statutory Authority: RCW 49.17.010, .040, and .050. 02-03-125 (Order 01-34), § 296-52-66020, filed 01/23/02, effective 03/01/02.]

296-52-66030 Storage license number.
[Statutory Authority: RCW 49.17.010, .040, and .050. 02-03-125 (Order 01-34), § 296-52-66030, filed 01/23/02, effective 03/01/02.]

296-52-66035 Storage limit.
[Statutory Authority: RCW 49.17.010, .040, and .050. 02-03-125 (Order 01-34), § 296-52-66035, filed 01/23/02, effective 03/01/02.]

296-52-66040 Annual storage inspection.
[Statutory Authority: RCW 49.17.010, .040, and .050. 02-03-125 (Order 01-34), § 296-52-66040, filed 01/23/02, effective 03/01/02.]

296-52-66045 Mobile storage sites.
[Statutory Authority: RCW 49.17.010, .040, and .050. 02-03-125 (Order 01-34), § 296-52-66045, filed 01/23/02, effective 03/01/02.]

296-52-66050 Moving a licensed magazine.
[Statutory Authority: RCW 49.17.010, .40, .050, and .060. 06-19-074 (Order 05-42), § 296-52-66050, filed 09/19/06, effective 12/01/06. Statutory Authority: RCW 49.17.010, .040, and .050. 02-03-125 (Order 01-34), § 296-52-66050, filed 01/23/02, effective 03/01/02.]

296-52-66053 Altering of destroying a licensed magazine.
[Statutory Authority: RCW 49.17.010, .40, .050, and .060. 06-19-074 (Order 05-42), § 296-52-66053, filed 09/19/06, effective 12/01/06.

296-52-66057 Transfer, sale or lease of a magazine or mobile storage site.
[Statutory Authority: RCW 49.17.010, .40, .050, and .060. 06-19-074 (Order 05-42), § 296-52-66057, filed 09/19/06, effective 12/01/06.

296-52-66060 Reporting changes in conditions.
[Statutory Authority: RCW 49.17.010, .040, and .050. 02-03-125 (Order 01-34), § 296-52-66060, filed 01/23/02, effective 03/01/02.]

Statutory Authorities
Possession, Handling and Use of Explosives

PART C USE OF EXPLOSIVE MATERIALS

296-52-67010 Blaster in charge responsibilities.
[Statutory Authority: RCW 49.17.010, .040, and .050. 02-03-125 (Order 01-34), § 296-52-67010, filed 01/23/02, effective 03/01/02.]
296-52-67020 Black powder.
[Statutory Authority: RCW 49.17.010, .040, and .050. 02-03-125 (Order 01-34), § 296-52-67020, filed 01/23/02, effective 03/01/02.]
296-52-67025 Age of explosives.
[Statutory Authority: RCW 49.17.010, .040, and .050. 02-03-125 (Order 01-34), § 296-52-67025, filed 01/23/02, effective 03/01/02.]
296-52-67030 Blast site storage.
[Statutory Authority: RCW 49.17.010, .040, and .050. 02-03-125 (Order 01-34), § 296-52-67030, filed 01/23/02, effective 03/01/02.]
296-52-67035 Day box storage.
[Statutory Authority: RCW 49.17.010, .040, and .050. 02-03-125 (Order 01-34), § 296-52-67035, filed 01/23/02, effective 03/01/02.]
296-52-67040 Attendants must be present.
[Statutory Authority: RCW 49.17.010, .040, and .050. 02-03-125 (Order 01-34), § 296-52-67040, filed 01/23/02, effective 03/01/02.]
296-52-67045 Handling explosives.
[Statutory Authority: RCW 49.17.010, .040, and .050. 02-03-125 (Order 01-34), § 296-52-67045, filed 01/23/02, effective 03/01/02.]
296-52-67050 Trainee supervision.
[Statutory Authority: RCW 49.17.010, .040, and .050. 02-03-125 (Order 01-34), § 296-52-67050, filed 01/23/02, effective 03/01/02.]
296-52-67055 Storms.
[Statutory Authority: RCW 49.17.010, .040, and .050. 02-03-125 (Order 01-34), § 296-52-67055, filed 01/23/02, effective 03/01/02.]
296-52-67060 Extraneous electricity and radio frequency (RF) transmitters.
[Statutory Authority: RCW 49.17.010, .040, and .050. 02-03-125 (Order 01-34), § 296-52-67060, filed 01/23/02, effective 03/01/02.]
296-52-67065 Vibration and damage control.
[Statutory Authority: RCW 49.17.010, 49.17.040, 49.17.050, and 49.17.060. 03-06-073 (Order 02-34), § 296-52-67065, filed 03/04/03, effective 08/01/03. Statutory Authority: RCW 49.17.010, .040, and .050. 02-03-125 (Order 01-34), § 296-52-67065, filed 01/23/02, effective 03/01/02.]
296-52-67070 Storage at blast sites.
[Statutory Authority: RCW 49.17.010, .040, and .050. 02-03-125 (Order 01-34), § 296-52-67070, filed 01/23/02, effective 03/01/02.]
296-52-67075 Blast area precautions.
[Statutory Authority: RCW 49.17.010, .040, and .050. 02-03-125 (Order 01-34), § 296-52-67075, filed 01/23/02, effective 03/01/02.]
296-52-67080 Drilling.
[Statutory Authority: RCW 49.17.010, .040, .050, and .060. 05-08-110 (Order 04-43), § 296-52-67080, filed 04/05/05, effective 06/01/05. Statutory Authority: RCW 49.17.010, .040, and .050. 02-03-125 (Order 01-34), § 296-52-67080, filed 01/23/02, effective 03/01/02.]
296-52-67085 Loading blast holes.
[Statutory Authority: RCW 49.17.010, .040, and .050. 02-03-125 (Order 01-34), § 296-52-67085, filed 01/23/02, effective 03/01/02.]

PART C USE OF EXPLOSIVE MATERIALS (Cont.)

296-52-67090 Initiation systems.
[Statutory Authority: RCW 49.17.010, .40, .050, and .060. 06-19-074 (Order 05-42), § 296-52-67090, filed 09/19/06, effective 12/01/06. Statutory Authority: RCW 49.17.010, .040, and .050. 02-03-125 (Order 01-34), § 296-52-67090, filed 01/23/02, effective 03/01/02.]

296-52-67095 Use of safety fuse with detonators.
[Statutory Authority: RCW 49.17.010, .040, and .050. 02-03-125 (Order 01-34), § 296-52-67095, filed 01/23/02, effective 03/01/02.]

296-52-67100 Use of detonating cord.
[Statutory Authority: RCW 49.17.010, .040, and .050. 02-03-125 (Order 01-34), § 296-52-67100, filed 01/23/02, effective 03/01/02.]

296-52-67105 Firing the blast.
[Statutory Authority: RCW 49.17.010, .040, and .050. 02-03-125 (Order 01-34), § 296-52-67105, filed 01/23/02, effective 03/01/02.]

296-52-67110 Precautions after firing.
[Statutory Authority: RCW 49.17.010, .040, and .050. 02-03-125 (Order 01-34), § 296-52-67110, filed 01/23/02, effective 03/01/02.]

296-52-67115 Excavation work in pressurized air locks.
[Statutory Authority: RCW 49.17.010, .040, and .050. 02-03-125 (Order 01-34), § 296-52-67115, filed 01/23/02, effective 03/01/02.]

296-52-67125 Transportation, storage, and use.
[Statutory Authority: RCW 49.17.010, .040, and .050. 02-03-125 (Order 01-34), § 296-52-67125, filed 01/23/02, effective 03/01/02.]

296-52-67130 Fixed location mixing.
[Statutory Authority: RCW 49.17.010, .040, and .050. 02-03-125 (Order 01-34), § 296-52-67130, filed 01/23/02, effective 03/01/02.]

296-52-67135 Bulk delivery/mixing vehicles.
[Statutory Authority: RCW 49.17.010, .040, and .050. 02-03-125 (Order 01-34), § 296-52-67135, filed 01/23/02, effective 03/01/02.]

296-52-67140 Bulk storage bins.
[Statutory Authority: RCW 49.17.010, .040, and .050. 02-03-125 (Order 01-34), § 296-52-67140, filed 01/23/02, effective 03/01/02.]

296-52-67145 Transportation of blasting agents.
[Statutory Authority: RCW 49.17.010, .040, and .050. 02-03-125 (Order 01-34), § 296-52-67145, filed 01/23/02, effective 03/01/02.]

296-52-67160 Types and classifications.
[Statutory Authority: RCW 49.17.010, 49.17.040, 49.17.050, and 49.17.060. 03-06-073 (Order 02-34), § 296-52-67160, filed 03/04/03, effective 08/01/03. Statutory Authority: RCW 49.17.010, .040, and .050. 02-03-125 (Order 01-34), § 296-52-67160, filed 01/23/02, effective 03/01/02.]

296-52-67165 Fixed location mixing.
[Statutory Authority: RCW 49.17.010, .040, .050, and .060. 05-08-110 (Order 04-43), § 296-52-67165, filed 04/05/05, effective 06/01/05. Statutory Authority: RCW 49.17.010, .040, and .050. 02-03-125 (Order 01-34), § 296-52-67165, filed 01/23/02, effective 03/01/02.]

296-52-67170 Bulk delivery/mixing vehicles.
[Statutory Authority: RCW 49.17.010, .040, and .050. 02-03-125 (Order 01-34), § 296-52-67170, filed 01/23/02, effective 03/01/02.]

296-52-67180 Separation distance from vessels and people.
[Statutory Authority: RCW 49.17.010, .040, and .050. 02-03-125 (Order 01-34), § 296-52-67180, filed 01/23/02, effective 03/01/02.]

296-52-67185 Swimming and diving activities.
[Statutory Authority: RCW 49.17.010, .040, and .050. 02-03-125 (Order 01-34), § 296-52-67185, filed 01/23/02, effective 03/01/02.]

PART C USE OF EXPLOSIVE MATERIALS (Cont.)

296-52-67190 Initiation systems.
[Statutory Authority: RCW 49.17.010, .040, and .050. 02-03-125 (Order 01-34), § 296-52-67190, filed 01/23/02, effective 03/01/02.]

296-52-67195 Loading tubes and casings.
[Statutory Authority: RCW 49.17.010, .040, and .050. 02-03-125 (Order 01-34), § 296-52-67195, filed 01/23/02, effective 03/01/02.]

296-52-67200 Multiple charges.
[Statutory Authority: RCW 49.17.010, .040, and .050. 02-03-125 (Order 01-34), § 296-52-67200, filed 01/23/02, effective 03/01/02.]

296-52-67210 Storage.
[Statutory Authority: RCW 49.17.010, .040, and .050. 02-03-125 (Order 01-34), § 296-52-67210, filed 01/23/02, effective 03/01/02.]

296-52-67215 Separation distance: Electrical storms.
[Statutory Authority: RCW 49.17.010, .040, and .050. 02-03-125 (Order 01-34), § 296-52-67215, filed 01/23/02, effective 03/01/02.]

296-52-67220 Proper fume class use.
[Statutory Authority: RCW 49.17.010, .040, and .050. 02-03-125 (Order 01-34), § 296-52-67220, filed 01/23/02, effective 03/01/02.]

296-52-67225 Combustible gases or dusts.
[Statutory Authority: RCW 49.17.010, .040, and .050. 02-03-125 (Order 01-34), § 296-52-67225, filed 01/23/02, effective 03/01/02.]

296-52-67230 Initiating systems.
[Statutory Authority: RCW 49.17.010, .040, and .050. 02-03-125 (Order 01-34), § 296-52-67230, filed 01/23/02, effective 03/01/02.]

296-52-67235 Firing the blast.
[Statutory Authority: RCW 49.17.010, .040, and .050. 02-03-125 (Order 01-34), § 296-52-67235, filed 01/23/02, effective 03/01/02.]

296-52-67240 Returning to the blast.
[Statutory Authority: RCW 49.17.010, .040, and .050. 02-03-125 (Order 01-34), § 296-52-67240, filed 01/23/02, effective 03/01/02.]

296-52-67245 High speed tunneling: Central primer house.
[Statutory Authority: RCW 49.17.010, .040, and .050. 02-03-125 (Order 01-34), § 296-52-67245, filed 01/23/02, effective 03/01/02.]

Statutory Authorities
Possession, Handling and Use of Explosives

PART D TRANSPORTATION OR EXPLOSIVE MATERIALS

296-52-68010 Public highways.
[Statutory Authority: RCW 49.17.010, .040, and .050. 02-03-125 (Order 01-34), § 296-52-68010, filed 01/23/02, effective 03/01/02.]
296-52-68015 Job sites and off highway roads.
[Statutory Authority: RCW 49.17.010, .040, and .050. 02-03-125 (Order 01-34), § 296-52-68015, filed 01/23/02, effective 03/01/02.]
296-52-68020 Safety precautions.
[Statutory Authority: RCW 49.17.010, .040, and .050. 02-03-125 (Order 01-34), § 296-52-68020, filed 01/23/02, effective 03/01/02.]
296-52-68025 Transportation of workers.
[Statutory Authority: RCW 49.17.010, .40, .050, and .060. 06-19-074 (Order 05-42), § 296-52-68025, filed 09/19/06, effective 12/01/06. Statutory Authority: RCW 49.17.010, .040, and .050. 02-03-125 (Order 01-34), § 296-52-68025, filed 01/23/02, effective 03/01/02.]
296-52-68030 Cargo.
[Statutory Authority: RCW 49.17.010, .040, and .050. 02-03-125 (Order 01-34), § 296-52-68030, filed 01/23/02, effective 03/01/02.]
296-52-68040 Vehicle strength and condition.
[Statutory Authority: RCW 49.17.010, .040, and .050. 02-03-125 (Order 01-34), § 296-52-68040, filed 01/23/02, effective 03/01/02.]
296-52-68045 Open top vehicles.
[Statutory Authority: RCW 49.17.010, .040, and .050. 02-03-125 (Order 01-34), § 296-52-68045, filed 01/23/02, effective 03/01/02.]
296-52-68050 Vehicle placards.
[Statutory Authority: RCW 49.17.010, .040, and .050. 02-03-125 (Order 01-34), § 296-52-68050, filed 01/23/02, effective 03/01/02.]
296-52-68055 Vehicle fire protection.
[Statutory Authority: RCW 49.17.010, .040, and .050. 02-03-125 (Order 01-34), § 296-52-68055, filed 01/23/02, effective 03/01/02.]
296-52-68060 Operation of vehicles transporting explosives.
[Statutory Authority: RCW 49.17.010, 49.17.040, 49.17.050, and 49.17.060. 03-06-073 (Order 02-34), § 296-52-68060, filed 03/04/03, effective 08/01/03. Statutory Authority: RCW 49.17.010, .040, and .050. 02-03-125 (Order 01-34), § 296-52-68060, filed 01/23/02, effective 03/01/02.]
296-52-68065 Transporting detonators and explosives in the same vehicle.
[Statutory Authority: RCW 49.17.010, .040, and .050. 02-03-125 (Order 01-34), § 296-52-68065, filed 01/23/02, effective 03/01/02.]
296-52-68075 Powder cars, vehicles, and conveyances.
[Statutory Authority: RCW 49.17.010, .040, and .050. 02-03-125 (Order 01-34), § 296-52-68075, filed 01/23/02, effective 03/01/02.]
296-52-68080 Notification--Hoist operator.
[Statutory Authority: RCW 49.17.010, .040, and .050. 02-03-125 (Order 01-34), § 296-52-68080, filed 01/23/02, effective 03/01/02.]
296-52-68085 Underground transportation.
[Statutory Authority: RCW 49.17.010, .040, and .050. 02-03-125 (Order 01-34), § 296-52-68085, filed 01/23/02, effective 03/01/02.]

Statutory Authorities
Possession, Handling and Use of Explosives

PART E STORAGE OF EXPLOSIVE MATERIALS

296-52-69005 Detonators.
[Statutory Authority: Statutory Authority: RCW 49.17.010, .040, and .050. 02-03-125 (Order 01-34), § 296-52-69005, filed 01/23/02, effective 03/01/02.]

296-52-69010 Explosives.
[Statutory Authority: RCW 49.17.010, 49.17.040, 49.17.050, and 49.17.060. 03-06-073 (Order 02-34), § 296-52-69010, filed 03/04/03, effective 08/01/03. Statutory Authority: RCW 49.17.010, .040, and .050. 02-03-125 (Order 01-34), § 296-52-69010, filed 01/23/02, effective 03/01/02.]

296-52-69015 Exempt explosives.
[Statutory Authority: RCW 49.17.010, 49.17.040, 49.17.050, and 49.17.060. 03-06-073 (Order 02-34), § 296-52-69015, filed 03/04/03, effective 08/01/03. Statutory Authority: RCW 49.17.010, .040, and .050. 02-03-125 (Order 01-34), § 296-52-69015, filed 01/23/02, effective 03/01/02.]

296-52-69020 Storage facilities.
[Statutory Authority: RCW 49.17.010, .040, .050, and .060. 05-08-110 (Order 04-43), § 296-52-69020, filed 04/05/05, effective 06/01/05. Statutory Authority: RCW 49.17.010, .040, and .050. 02-03-125 (Order 01-34), § 296-52-69020, filed 01/23/02, effective 03/01/02.]

296-52-69025 Quantity and distance tables.
[Statutory Authority: RCW 49.17.010, .040, and .050. 02-03-125 (Order 01-34), § 296-52-69025, filed 01/23/02, effective 03/01/02.]

296-52-69030 Storage within magazines.
[Statutory Authority: RCW 49.17.010, .040, and .050. 02-03-125 (Order 01-34), § 296-52-69030, filed 01/23/02, effective 03/01/02.]

296-52-69035 Storage limits.
[Statutory Authority: RCW 49.17.010, .040, 050 and .060. . 02-03-125 (Order 01-34), § 296-52-69035, filed 01/23/02, effective 03/01/02.]

296-52-69040 Notification of fire safety authority.
Statutory Authority: RCW 49.17.010, 040, .050, and .060. 11-01-124 (Order 10-30), § 296-52-69040, filed 12/20/10, effective 02/01/11. [Statutory Authority: RCW 49.17.010, .040, and .050. 02-03-125 (Order 01-34), § 296-52-69040, filed 01/23/02, effective 03/01/02.]

296-52-69045 Magazine repairs.
[Statutory Authority: RCW 49.17.010, .040, and .050. 02-03-125 (Order 01-34), § 296-52-69045, filed 01/23/02, effective 03/01/02.]

296-52-69050 Inventory.
[Statutory Authority: RCW 49.17.010, .040, and .050. 02-03-125 (Order 01-34), § 296-52-69050, filed 01/23/02, effective 03/01/02.]

296-52-69055 Inspection.
[Statutory Authority: RCW 49.17.010, .040, and .050. 02-03-125 (Order 01-34), § 296-52-69055, filed 01/23/02, effective 03/01/02.]

296-52-69060 Precautions for areas surrounding magazine.
[Statutory Authority: RCW 49.17.010, .040, and .050. 02-03-125 (Order 01-34), § 296-52-69060, filed 01/23/02, effective 03/01/02.]

296-52-69065 Deteriorated explosives.
[Statutory Authority: RCW 49.17.010, .040, and .050. 02-03-125 (Order 01-34), § 296-52-69065, filed 01/23/02, effective 03/01/02.]

296-52-69070 Explosives recovered from misfires.
[Statutory Authority: RCW 49.17.010, .040, and .050. 02-03-125 (Order 01-34), § 296-52-69070, filed 01/23/02, effective 03/01/02.]

296-52-69080 Blast site storage.
[Statutory Authority: RCW 49.17.010, .040, and .050. 02-03-125 (Order 01-34), § 296-52-69080, filed 01/23/02, effective 03/01/02.]

PART E STORAGE OF EXPLOSIVE MATERIALS (Cont.)

296-52-69085 Multiple magazines.
[Statutory Authority: RCW 49.17.010, .040, and .050. 02-03-125 (Order 01-34), § 296-52-69085, filed 01/23/02, effective 03/01/02.]

296-52-69090 Blasting agents and supplies.
[Statutory Authority: RCW 49.17.010, .040, and .050. 02-03-125 (Order 01-34), § 296-52-69090, filed 01/23/02, effective 03/01/02.]

296-52-69095 Ammonium nitrate.
[Statutory Authority: RCW 49.17.010, .040, .050, AND .060. 14-07-086 (Order 13-08), § 296-52-69095, filed 03/18/14, effective 05/01/14. Statutory Authority: RCW 49.17.010, 49.17.040, 49.17.050, and 49.17.060. 03-06-073 (Order 02-34), § 296-52-69095, filed 03/04/03, effective 08/01/03. Statutory Authority: RCW 49.17.010, .040, and .050. 02-03-125 (Order 01-34), § 296-52-69095, filed 01/23/02, effective 03/01/02.]

296-52-69105 Table H-20--Table of distances for storage of explosives.
[Statutory Authority: RCW 49.17.010, .040, and .050. 02-03-125 (Order 01-34), § 296-52-69105, filed 01/23/02, effective 03/01/02.]

296-52-69110 Table H-21--Quantity and distance table for separation between magazines.
[Statutory Authority: RCW 49.17.010, .040, and .050. 02-03-125 (Order 01-34), § 296-52-69110, filed 01/23/02, effective 03/01/02.]

296-52-69115 Table H-22--Separation distances of ammonium nitrate and blasting agents from explosives or blasting agents.
[Statutory Authority: RCW 49.17.010, .040, and .050. 02-03-125 (Order 01-34), § 296-52-69115, filed 01/23/02, effective 03/01/02.]

296-52-69120 Table H-23--Quantity and distance tables for manufacturing buildings.
[Statutory Authority: RCW 49.17.010, .040, and .050. 02-03-125 (Order 01-34), § 296-52-69120, filed 01/23/02, effective 03/01/02.]

296-52-69125 Table H-24--Low explosives.
[Statutory Authority: RCW 49.17.010, 49.17.040, 49.17.050, and 49.17.060. 03-06-073 (Order 02-34), § 296-52-69125, filed 03/04/03, effective 08/01/03. Statutory Authority: RCW 49.17.010, .040, and .050. 02-03-125 (Order 01-34), § 296-52-69125, filed 01/23/02, effective 03/01/02.]

296-52-69130 Table of distance for the storage of display fireworks (except bulk salutes).
[Statutory Authority: RCW 49.17.010, 49.17.040, 49.17.050, and 49.17.060. 03-06-073 (Order 02-34), § 296-52-9130, filed 03/04/03, effective 08/01/03.]

Statutory Authorities
Possession, Handling and Use of Explosives

PART F MAGAZINE CONSTRUCTION

296-52-700 Magazine construction.
[Statutory Authority: RCW 49.17.010, .040, and .050. 02-03-125 (Order 01-34), § 296-52-700, filed 01/23/02, effective 03/01/02.]

296-52-70005 Type 1 magazines: permanent storage facilities.
[Statutory Authority: RCW 49.17.010, .040, .050, and .060. 05-08-110 (Order 04-43), § 296-52-70005, filed 04/05/05, effective 06/01/05. Statutory Authority: RCW 49.17.010, .040, and .050. 02-03-125 (Order 01-34), § 296-52-70005, filed 01/23/02, effective 03/01/02.]

296-52-70010 Building construction for Type 1 magazines.
[Statutory Authority: RCW 49.17.010, .040, .050, and .060. 05-08-110 (Order 04-43), § 296-52-70010, filed 04/05/05, effective 06/01/05. Statutory Authority: RCW 49.17.010, 49.17.040, 49.17.050, and 49.17.060. 03-06-073 (Order 02-34), § 296-52-70010, filed 03/04/03, effective 08/01/03. Statutory Authority: RCW 49.17.010, .040, and .050. 02-03-125 (Order 01-34), § 296-52-70010, filed 01/23/02, effective 03/01/02.]

296-52-70015 Igloos, army-type structures, tunnels, and dugouts.
[Statutory Authority: RCW 49.17.010, .040, .050, and .060. 05-08-110 (Order 04-43), § 296-52-70015, filed 04/05/05, effective 06/01/05. Statutory Authority: RCW 49.17.010, .040, and .050. 02-03-125 (Order 01-34), § 296-52-70015, filed 01/23/02, effective 03/01/02.]

296-52-70020 Type 2 magazines: Portable field storage.
[Statutory Authority: RCW 49.17.010, .040, .050, and .060. 05-08-110 (Order 04-43), § 296-52-70020, filed 04/05/05, effective 06/01/05. Statutory Authority: RCW 49.17.010, .040, and .050. 02-03-125 (Order 01-34), § 296-52-70020, filed 01/23/02, effective 03/01/02.]

296-52-70025 Construction for Type 2 magazines.
[Statutory Authority: RCW 49.17.010, .040, .050, and .060. 05-08-110 (Order 04-43), § 296-52-70025, filed 04/05/05, effective 06/01/05. Statutory Authority: RCW 49.17.010, .040, and .050. 02-03-125 (Order 01-34), § 296-52-70025, filed 01/23/02, effective 03/01/02.]

296-52-70030 Type 3 magazines: Indoor storage facilities.
[Statutory Authority: RCW 49.17.010, .040, .050, and .060. 05-08-110 (Order 04-43), § 296-52-70030, filed 04/05/05, effective 06/01/05. Statutory Authority: RCW 49.17.010, .040, and .050. 02-03-125 (Order 01-34), § 296-52-70030, filed 01/23/02, effective 03/01/02.]

296-52-70035 Storage facilities for detonators.
[Statutory Authority: RCW 49.17.010, .040, and .050. 02-03-125 (Order 01-34), § 296-52-70035, filed 01/23/02, effective 03/01/02.]

296-52-70040 Construction for Type 3 magazines.
[Statutory Authority: RCW 49.17.010, .040, .050, and .060. 05-08-110 (Order 04-43), § 296-52-70040, filed 04/05/05, effective 06/01/05. Statutory Authority: RCW 49.17.010, .040, and .050. 02-03-125 (Order 01-34), § 296-52-70040, filed 01/23/02, effective 03/01/02.]

296-52-70045 Type 4 magazines: Blasting agent, low explosive, or nonmass detonating detonator storage facilities.
[Statutory Authority: RCW 49.17.010, .40, .050, and .060. 06-19-074 (Order 05-42), § 296-52-70045, filed 09/19/06, effective 12/01/06. Statutory Authority: RCW 49.17.010, .040, .050, and .060. 05-08-110 (Order 04-43), § 296-52-70045, filed 04/05/05, effective 06/01/05. Statutory Authority: RCW 49.17.010, .040, and .050. 02-03-125 (Order 01-34), § 296-52-70045, filed 01/23/02, effective 03/01/02.]

296-52-70050 Construction for Type 4 magazines.
[Statutory Authority: RCW 49.17.010, .040, .050, and .060. 05-08-110 (Order 04-43), § 296-52-70050, filed 04/05/05, effective 06/01/05. Statutory Authority: RCW 49.17.010, .040, and .050. 02-03-125 (Order 01-34), § 296-52-70050, filed 01/23/02, effective 03/01/02.]

296-52-70055 Type 5 magazines: Blasting agent storage facilities.
[Statutory Authority: RCW 49.17.010, .040, .050, and .060. 05-08-110 (Order 04-43), § 296-52-70055, filed 04/05/05, effective 06/01/05. Statutory Authority: RCW 49.17.010, .040, and .050. 02-03-125 (Order 01-34), § 296-52-70055, filed 01/23/02, effective 03/01/02.]

PART F MAGAZINE CONSTRUCTION (Cont.)

296-52-70060 Construction for Type 5 magazines.
[Statutory Authority: RCW 49.17.010, .040, .050, and .060. 05-08-110 (Order 04-43), § 296-52-70060, filed 04/05/05, effective 06/01/05. Statutory Authority: RCW 49.17.010, .040, and .050. 02-03-125 (Order 01-34), § 296-52-70060, filed 01/23/02, effective 03/01/02.]

296-52-70065 Explosives day box.
[Statutory Authority: RCW 49.17.010, .040, and .050. 02-03-125 (Order 01-34), § 296-52-70065, filed 01/23/02, effective 03/01/02.]

296-52-70070 Detonator day box.
[Statutory Authority: RCW 49.17.010, .040, and .050. 02-03-125 (Order 01-34), § 296-52-70070, filed 01/23/02, effective 03/01/02.]

296-52-70080 Magazine heating system requirements.
[Statutory Authority: RCW 49.17.010, .040, and .050. 02-03-125 (Order 01-34), § 296-52-70080, filed 01/23/02, effective 03/01/02.]

296-52-70085 Lighting.
[Statutory Authority: RCW 49.17.010, .040, and .050. 02-03-125 (Order 01-34), § 296-52-70085, filed 01/23/02, effective 03/01/02.]

Statutory Authorities
Possession, Handling and Use of Explosives

PART G MISCELLAENOUS

296-52-710 Exemptions.
[Statutory Authority: RCW 49.17.010, 49.17.040, 49.17.050, and 49.17.060. 03-06-073 (Order 02-34), § 296-52-710, filed 03/04/03, effective 08/01/03. Statutory Authority: RCW 49.17.010, .040, and .050. 02-03-125 (Order 01-34), § 296-52-710, filed 01/23/02, effective 03/01/02.]

296-52-71015 Quantity limits.
[Statutory Authority: RCW 49.17.010, .040, and .050. 02-03-125 (Order 01-34), § 296-52-71015, filed 01/23/02, effective 03/01/02.]

296-52-71020 Storage with Class A or B explosives.
[Statutory Authority: RCW 49.17.010, .040, .050, and .060. 05-08-110 (Order 04-43), § 296-52-71020, filed 04/05/05, effective 06/01/05. Statutory Authority: RCW 49.17.010, 49.17.040, 49.17.050, and 49.17.060. 03-06-073 (Order 02-34), § 296-52-71020, filed 03/04/03, effective 08/01/03. Statutory Authority: RCW 49.17.010, .040, and .050. 02-03-125 (Order 01-34), § 296-52-71020, filed 01/23/02, effective 03/01/02.]

296-52-71025 Separation from flammable materials.
[Statutory Authority: RCW 49.17.010, .040, and .050. 02-03-125 (Order 01-34), § 296-52-71025, filed 01/23/02, effective 03/01/02.]

296-52-71035 Transportation.
[Statutory Authority: RCW 49.17.010, .040, and .050. 02-03-125 (Order 01-34), § 296-52-71035, filed 01/23/02, effective 03/01/02.]

296-52-71040 Shipping container.
[Statutory Authority: RCW 49.17.010, 49.17.040, 49.17.050, and 49.17.060. 03-06-073 (Order 02-34), § 296-52-71040, filed 03/04/03, effective 08/01/03. Statutory Authority: RCW 49.17.010, .040, and .050. 02-03-125 (Order 01-34), § 296-52-71040, filed 01/23/02, effective 03/01/02.]

296-52-71045 Storage.
[Statutory Authority: RCW 49.17.010, 49.17.040, 49.17.050, and 49.17.060. 03-06-073 (Order 02-34), § 296-52-71045, filed 03/04/03, effective 08/01/03. Statutory Authority: RCW 49.17.010, .040, and .050. 02-03-125 (Order 01-34), § 296-52-71045, filed 01/23/02, effective 03/01/02.]

296-52-71055 Shipping containers.
[Statutory Authority: RCW 49.17.010, .040, and .050. 02-03-125 (Order 01-34), § 296-52-71055, filed 01/23/02, effective 03/01/02.]

296-52-71060 Separation from flammable materials.
[Statutory Authority: RCW 49.17.010, .040, and .050. 02-03-125 (Order 01-34), § 296-52-71060, filed 01/23/02, effective 03/01/02.]

296-52-71065 Storage.
[Statutory Authority: RCW 49.17.010, .040, and .050. 02-03-125 (Order 01-34), § 296-52-71065, filed 01/23/02, effective 03/01/02.]

296-52-71075 Shipping containers.
[Statutory Authority: RCW 49.17.010, .040, and .050. 02-03-125 (Order 01-34), § 296-52-71075, filed 01/23/02, effective 03/01/02.]

296-52-71080 Storage.
[Statutory Authority: RCW 49.17.010, .040, .050, and .060. 05-08-110 (Order 04-43), § 296-52-71080, filed 04/05/05, effective 06/01/05. Statutory Authority: RCW 49.17.010, .040, and .050. 02-03-125 (Order 01-34), § 296-52-71080, filed 01/23/02, effective 03/01/02.]

296-52-71090 Delivery to carriers.
[Statutory Authority: RCW 49.17.010, .040, and .050. 02-03-125 (Order 01-34), § 296-52-71090, filed 01/23/02, effective 03/01/02.]

296-52-71095 Hours of transfer.
[Statutory Authority: RCW 49.17.010, .040, and .050. 02-03-125 (Order 01-34), § 296-52-71095, filed 01/23/02, effective 03/01/02.]

PART G MISCELLAENOUS (Cont.)

296-52-71100 Storage in route.
[Statutory Authority: RCW 49.17.010, .040, and .050. 02-03-125 (Order 01-34), § 296-52-71100, filed 01/23/02, effective 03/01/02.]

296-52-71105 Railway cars.
[Statutory Authority: RCW 49.17.010, .040, and .050. 02-03-125 (Order 01-34), § 296-52-71105, filed 01/23/02, effective 03/01/02.]

296-52-720 Appendix A, sample explosives-blasting ordinance for local jurisdictions, non-mandatory.
[Statutory Authority: RCW 49.17.010, .040, and .050. 02-03-125 (Order 01-34), § 296-52-720, filed 01/23/02, effective 03/01/02.]

296-52-725 Appendix B, sample format for a blast record, non-mandatory.
[Statutory Authority: RCW 49.17.010, .040, .050, and .060. 05-08-110 (Order 04-43), § 296-52-725, filed 04/05/05, effective 06/01/05. Statutory Authority: RCW 49.17.010, .040, and .050. 02-03-125 (Order 01-34), § 296-52-725, filed 01/23/02, effective 03/01/02.]

Statutory Authorities
Possession, Handling and Use of Explosives

PART H AVALANCHE CONTROL

296-52-800 Avalanche control.
Statutory Authority: RCW 49.17.010, .40, .050, and .060. 06-19-074 (Order 05-42), § 296-52-800, filed 09/19/06, effective 12/01/06.

296-52-802 Acceptable warning signs for typical avalanche control devices (duds).
[Statutory Authority: RCW 49.17.010, .40, .050, and .060. 06-19-074 (Order 05-42), § 296-52-802, filed 09/19/06, effective 12/01/06.

296-52-803 Storage, makeup, and use of explosives for avalanche control blasting.
[Statutory Authority: RCW 49.17.010, .40, .050, and .060. 06-19-074 (Order 05-42), § 296-52-803, filed 09/19/06, effective 12/01/06.

296-52-805 Hand charge makeup methods.
[Statutory Authority: RCW 49.17.010, .40, .050, and .060. 06-19-074 (Order 05-42), § 296-52-805, filed 09/19/06, effective 12/01/06.

296-52-807 Avalanche control blasting.
[Statutory Authority: RCW 49.17.010, .40, .050, and .060. 06-19-074 (Order 05-42), § 296-52-807, filed 09/19/06, effective 12/01/06.

296-52-809 Retrieving misfired explosives (duds)
[Statutory Authority: RCW 49.17.010, .40, .050, and .060. 06-19-074 (Order 05-42), § 296-52-809, filed 09/19/06, effective 12/01/06.